US00D376809S

United States Patent [19]

Stone et al.

[11] Patent Number: Des. 376,809

[45] Date of Patent: **Dec. 24, 1996

[54] **SPADE-TYPE BORING BIT**

[75] Inventors: **Paul A. Stone**, York County, Pa.; **Rickey J. Thomas**, Carroll County; **Chris McKenna**, Baltimore, both of Md.

[73] Assignee: **Black & Decker Inc.**, Newark, Del.

[**] Term: **14 Years**

[21] Appl. No.: **46,087**

[22] Filed: **Nov. 7, 1995**

Related U.S. Application Data

[62] Division of Ser. No. 32,861, Dec. 30, 1994.

[52] **U.S. Cl.** **D15/139**

[58] **Field of Search** D15/138, 139; 408/211, 212, 213, 225, 230

[56] **References Cited**

U.S. PATENT DOCUMENTS

D. 240,263	6/1976	Southall .	
D. 278,065	3/1985	Sydlowski et al. .	
2,332,295	10/1943	Bouchai .	
2,627,292	2/1953	Kronwall .	
2,681,673	6/1954	Mackey .	
2,692,627	10/1954	Stearns .	
2,782,824	2/1957	Robinson .	
2,794,468	6/1957	Huxtable .	
2,883,888	4/1959	Stewart .	
2,962,066	11/1960	Deliso .	
3,920,350	11/1975	Southall .	
3,997,279	12/1976	Porter .	
4,050,841	9/1977	Hildebrandt .	
4,286,904	9/1981	Porter et al. .	
4,625,593	12/1986	Schmotzer .	
4,682,917	7/1987	Williams, III et al. .	
4,753,558	6/1988	Jansson .	
4,950,111	8/1990	Thomas .	
5,056,967	5/1991	Hageman .	
5,061,127	10/1991	Thomas .	
5,099,933	3/1992	Schimke et al. .	
5,145,018	9/1992	Schimke et al. .	
5,149,234	9/1992	Durfee, Jr. .	
5,184,689	2/1993	Sheirer et al. .	
5,193,951	3/1993	Schimke .	
5,221,166	6/1993	Bothum .	
5,286,143	2/1994	Schimke .	
5,291,806	3/1994	Bothum .	
5,433,561	7/1995	Schimke .	
5,452,970	9/1995	Sundstrom et al.	408/211

FOREIGN PATENT DOCUMENTS

0118806	9/1984	European Pat. Off. .
2130935	6/1984	United Kingdom .
2271948	4/1994	United Kingdom .

Primary Examiner—Antoine Duval Davis
Attorney, Agent, or Firm—Bell, Seltzer, Park & Gibson, P.A.

[57] **CLAIM**

The ornamental design for a spade-type boring bit, as shown and described.

DESCRIPTION

FIG. **1** is a front perspective view of a first embodiment of our new design;
FIG. **2** is a rear elevational view thereof, taken from the side opposite that illustrated in FIG. **1;**
FIG. **3** is a side elevational view thereof, taken from the side opposite that illustrated in FIG. **1;**
FIG. **4** is a slightly enlarged top plan view thereof;
FIG. **5** is a slightly enlarged bottom plan view thereof;
FIG. **6** is an enlarged cross-sectional view thereof, taken along line **6—6** of FIG. **2;**
FIG. **7** is a front perspective view of a second embodiment of our new design;
FIG. **8** is a rear elevational view thereof, taken from the side opposite that illustrated in FIG. **7;**
FIG. **9** is a side elevational view thereof, taken from the side opposite that illustrated in FIG. **7;**
FIG. **10** is a slightly enlarged top plan view thereof;
FIG. **11** is a slightly enlarged bottom plan view thereof; and,
FIG. **12** is an enlarged cross-sectional view thereof, taken along line **12—12** of FIG. **8.**
The broken lines in the Figures are shown for illustrative purposes only and form no part of the claimed design.

1 Claim, 2 Drawing Sheets

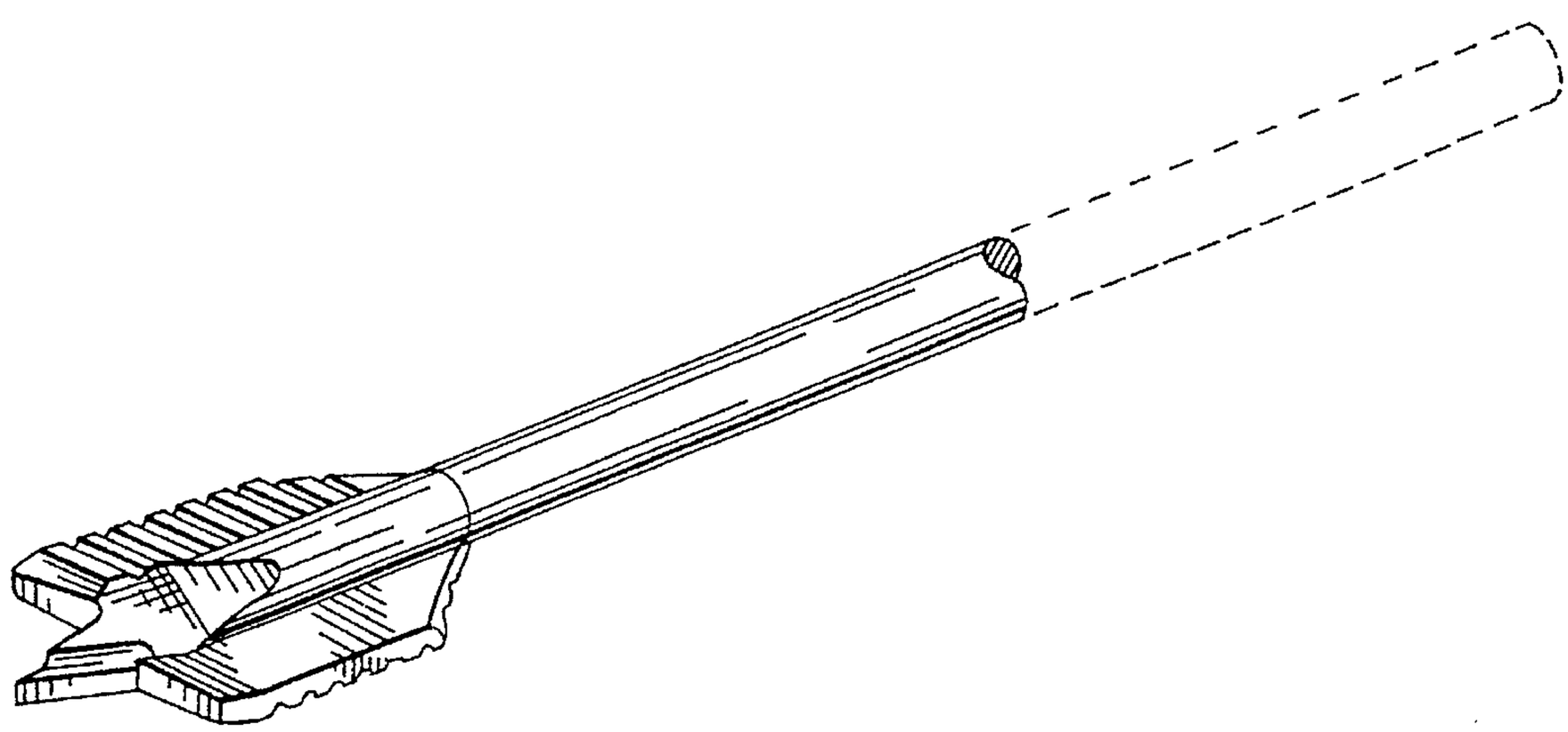

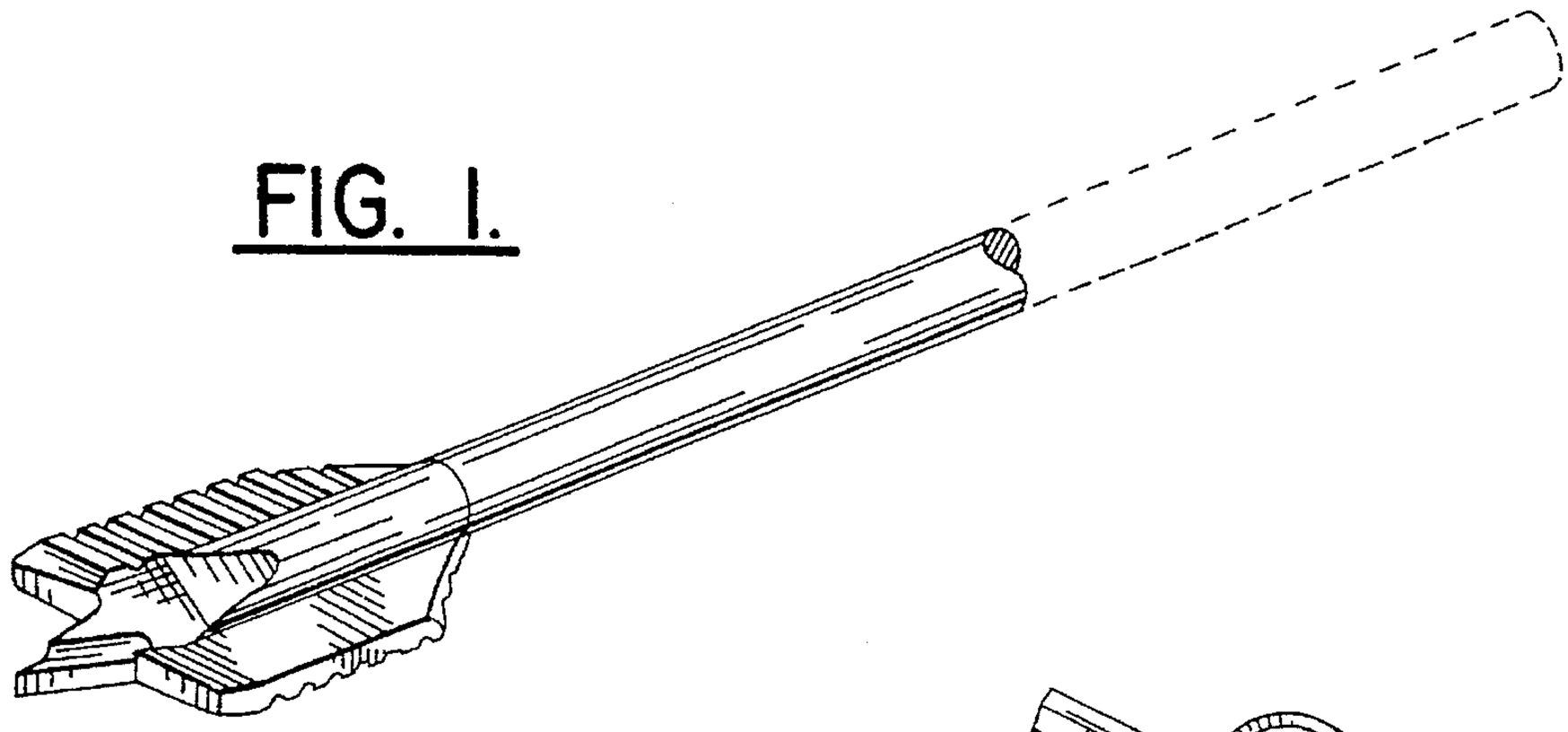

FIG. 1.

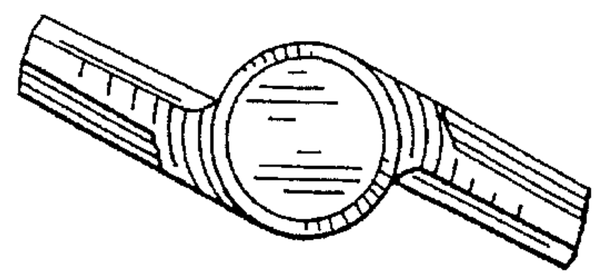

FIG. 4.

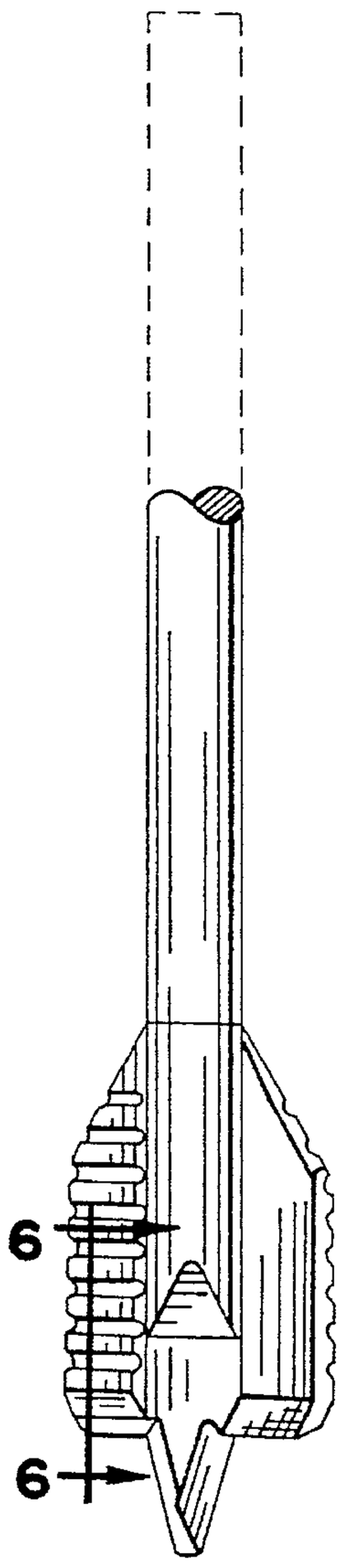

FIG. 2.

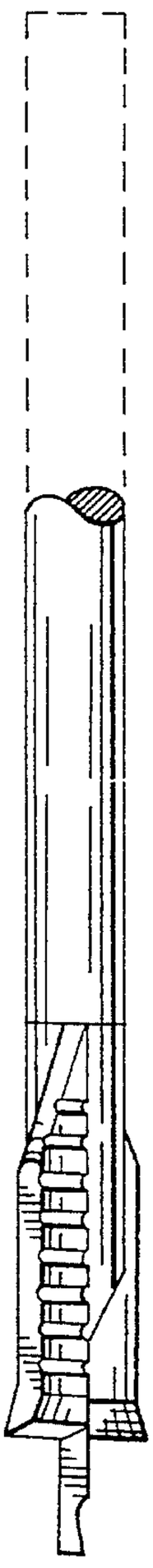

FIG. 3.

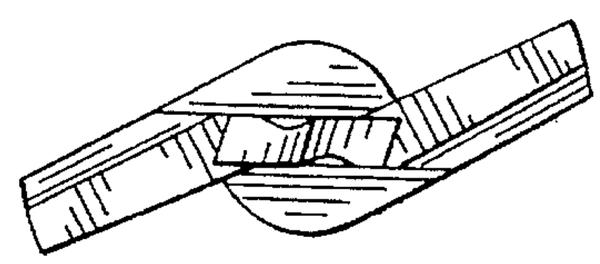

FIG. 5.

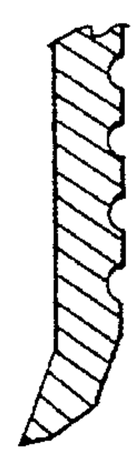

FIG. 6.

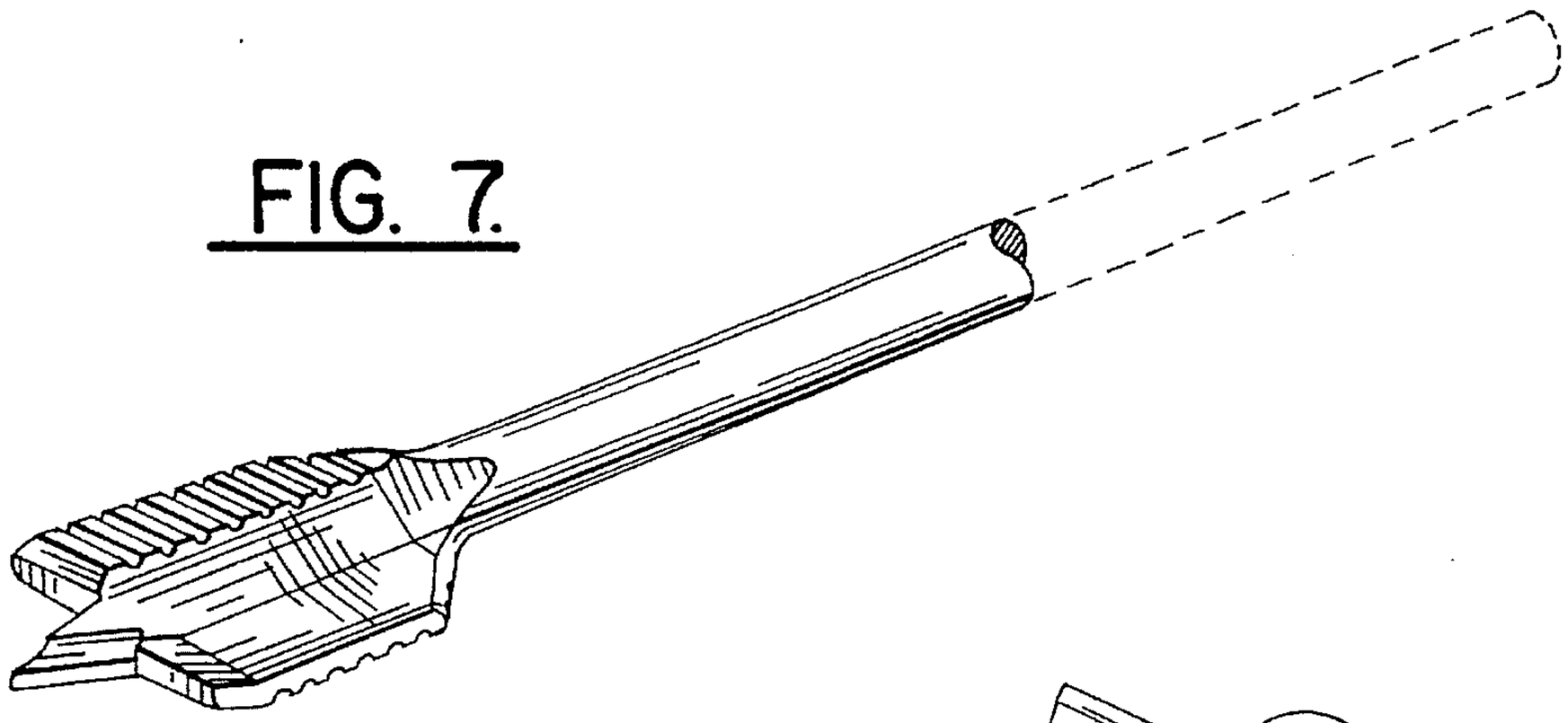

FIG. 7.

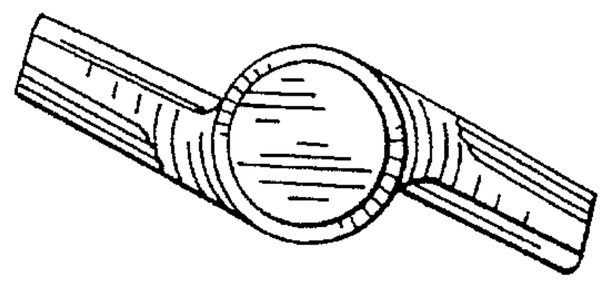

FIG. 10.

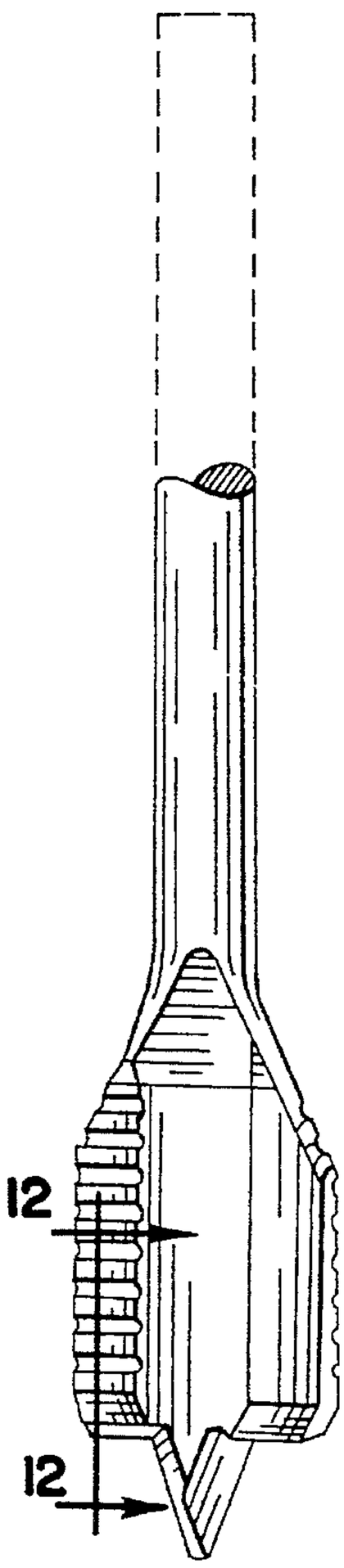

FIG. 8.

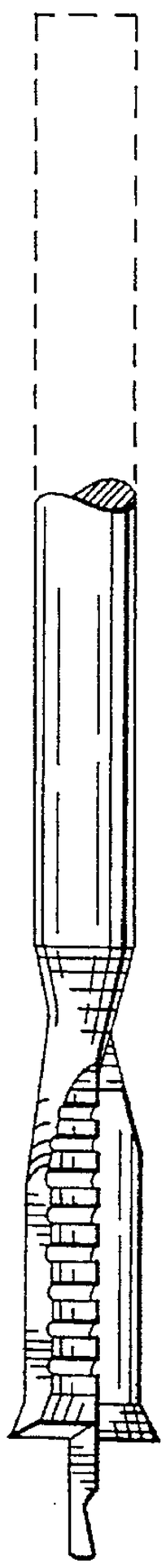

FIG. 9.

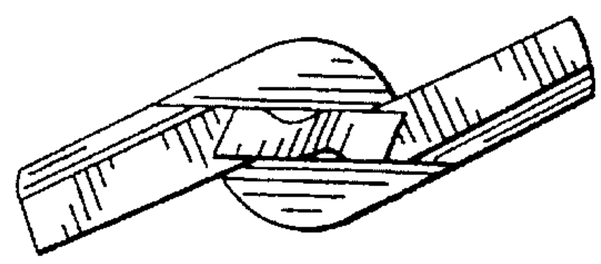

FIG. 11.

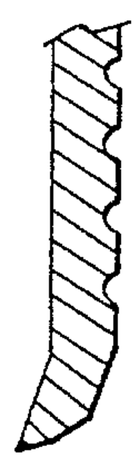

FIG. 12.