US00D372093S

United States Patent [19]

Sampson et al.

[11] Patent Number: Des. 372,093

[45] Date of Patent: **Jul. 23, 1996

[54] CIRCULAR TUBING CONNECTOR HANDLE

[76] Inventors: **Richard K. Sampson**, 3350 Eastbrook Dr., Fort Collins, Colo. 80521; **Bruce A. Williams**, 2025 Tunis Cir., Fort Collins, Colo. 80526

[**] Term: **14 Years**

[21] Appl. No.: **12,793**

[22] Filed: **Sep. 10, 1993**

Related U.S. Application Data

[63] Continuation-in-part of Ser. No. 655,901, Feb. 14, 1991, Pat. No. Des. 339,417.

[52] **U.S. Cl.** **D24/129**

[58] **Field of Search** D24/129, 118, D24/117; 604/246, 905, 280, 403; 285/38, 239, 232; D23/262

[56] **References Cited**

U.S. PATENT DOCUMENTS

D. 209,168	11/1967	Hunt	D23/262
D. 252,470	7/1979	Pawlak	D24/129
D. 255,145	5/1980	Nederman	D23/01
D. 258,526	3/1981	Nederman	D23/01
D. 259,278	5/1981	McCaw et al.	D24/99
D. 282,962	3/1986	Gerber	D23/43
D. 313,067	12/1990	Kotake et al.	D23/262
D. 313,277	12/1990	Haining	D24/53
D. 326,155	5/1992	Boehringer et al.	D24/129
D. 333,178	2/1993	Novy	D23/262
D. 339,417	9/1993	Sampson et al.	D24/129
4,296,949	10/1981	Muetterties et al.	285/18
4,346,703	8/1982	Dennehey et al.	D24/129 X
4,397,442	8/1983	Larkin	D24/129 X
4,439,188	3/1984	Dennehy et al.	604/283
4,903,995	2/1990	Blenkush et al.	285/38

OTHER PUBLICATIONS

Instrument Quality Fittings, 1992 OEM Catalog and Price List #CAT14, pp. 25–26, Mar. 1992.

Instrument Quality Fittings, Value Plastics, Inc., 1992; pp. 25–26.

Colder Products Company "The Soft tube Fitting" item Male Stright p. 3 ©Jun. 1991.

Primary Examiner—Louis S. Zarfas
Assistant Examiner—I. Simmons
Attorney, Agent, or Firm—Luke Santangelo

[57] **CLAIM**

The ornamental design for a circular tubing connector handle, as shown and described.

DESCRIPTION

FIG. **1** is a perspective view of a circular tubing connector handle showing our new design;
FIG. **2** is a front elevational view thereof;
FIG. **3** is a rear elevational view thereof;
FIG. **4** is a left side elevational view thereof;
FIG. **5** is a right side elevational view thereof;
FIG. **6** is a top plan view thereof; and,
FIG. **7** is a bottom plan view thereof.
The broken lines shown in FIGS. **1–7** are for illustrative purposes only and forms no part of the claimed design.

1 Claim, 2 Drawing Sheets

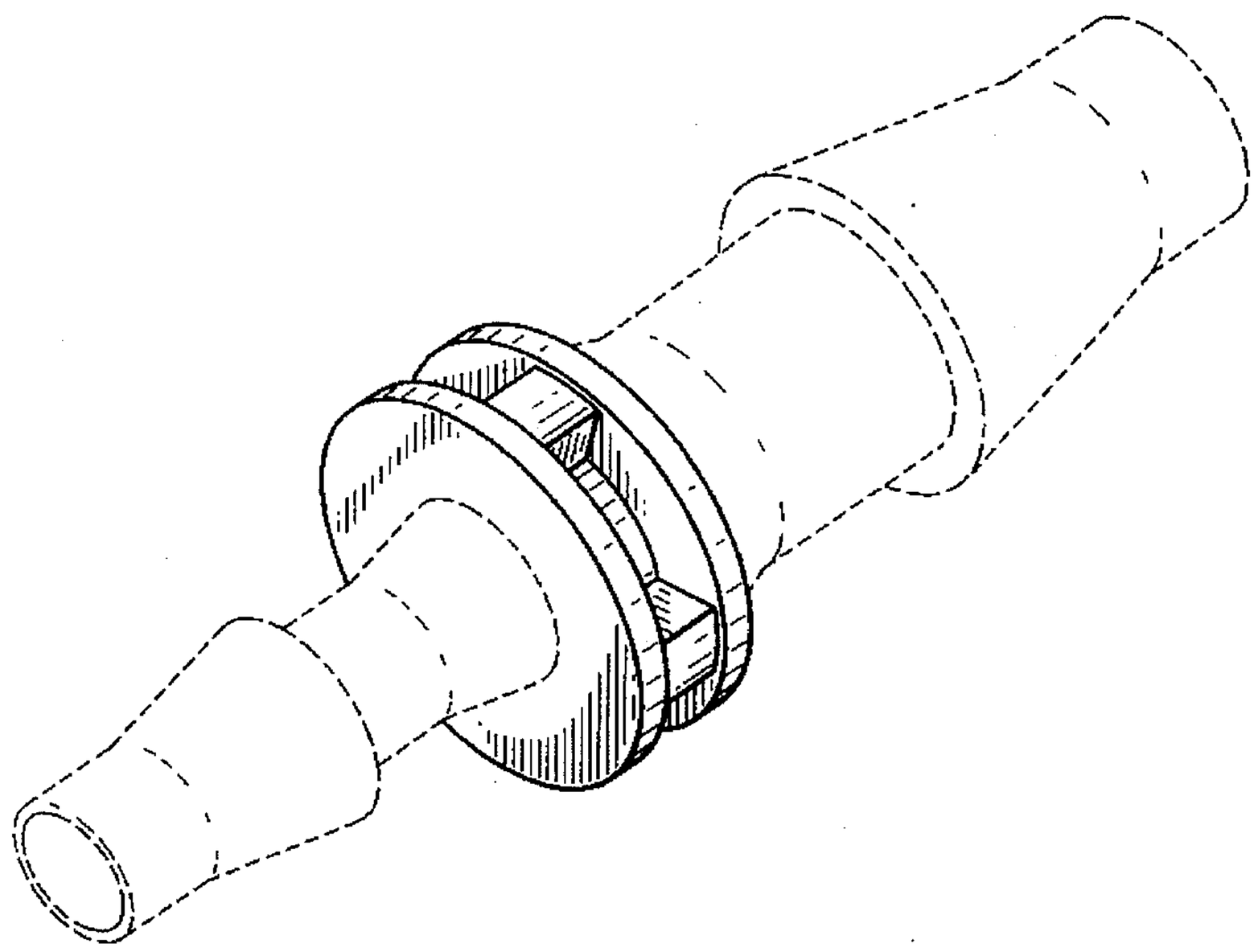

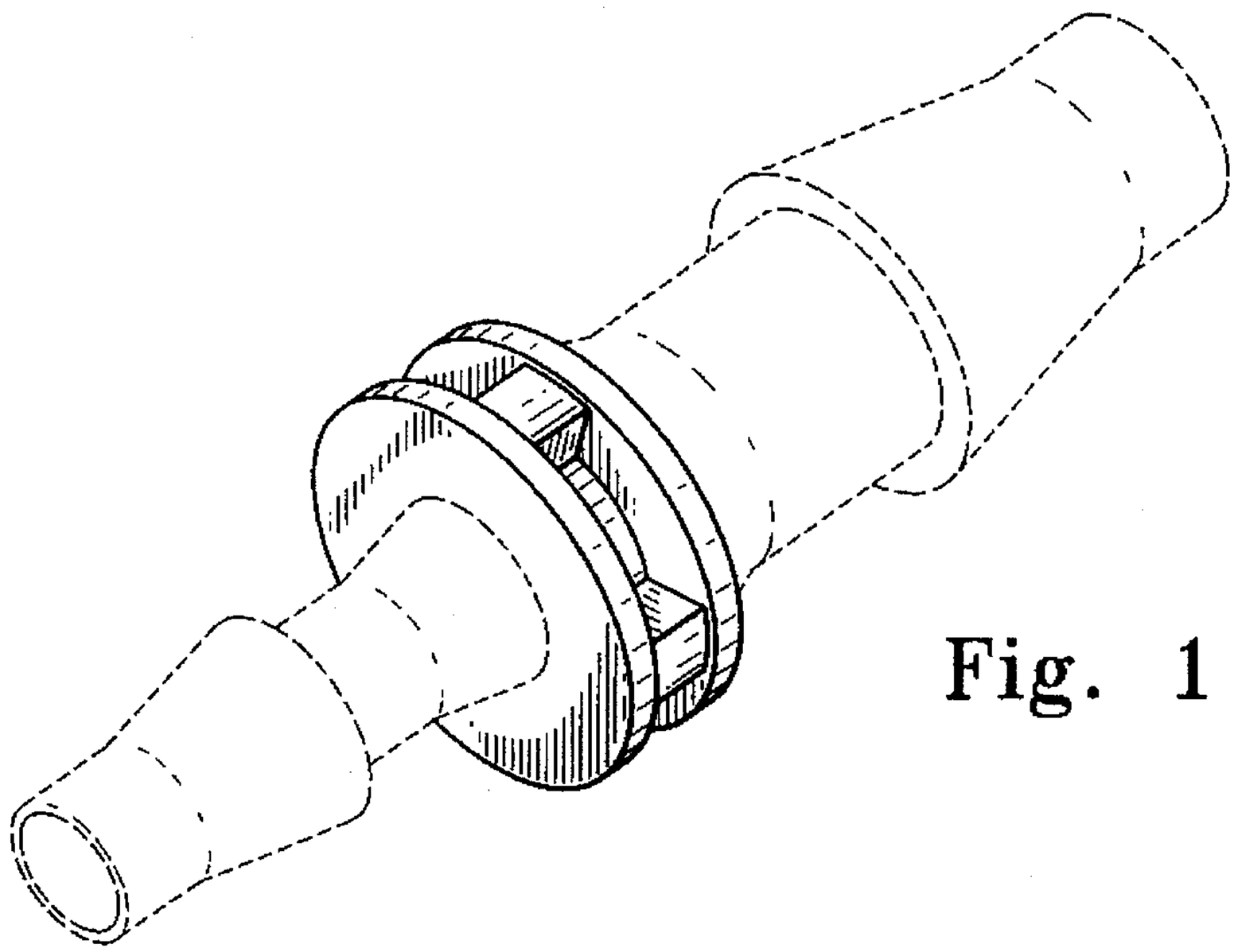

Fig. 1

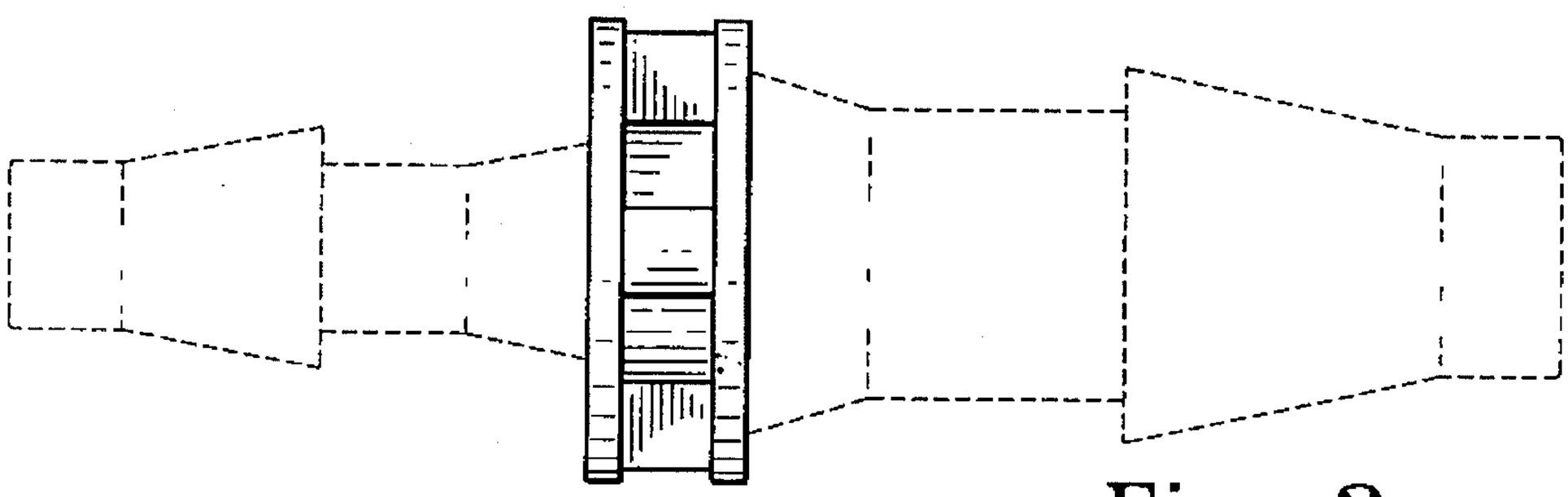

Fig. 2

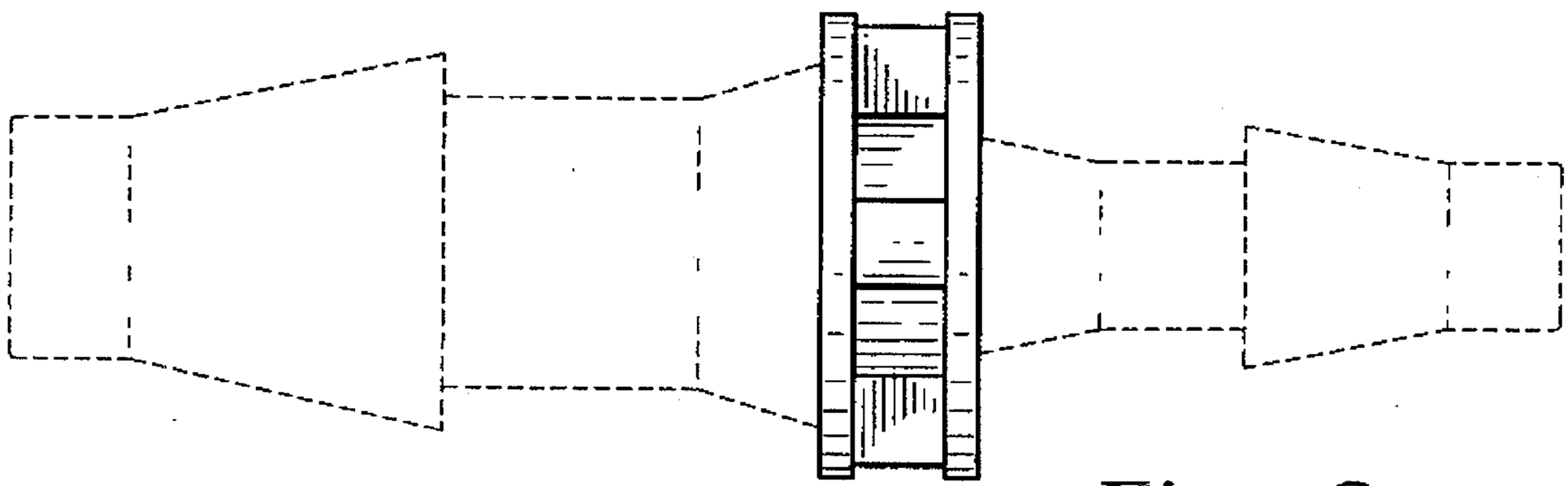

Fig. 3

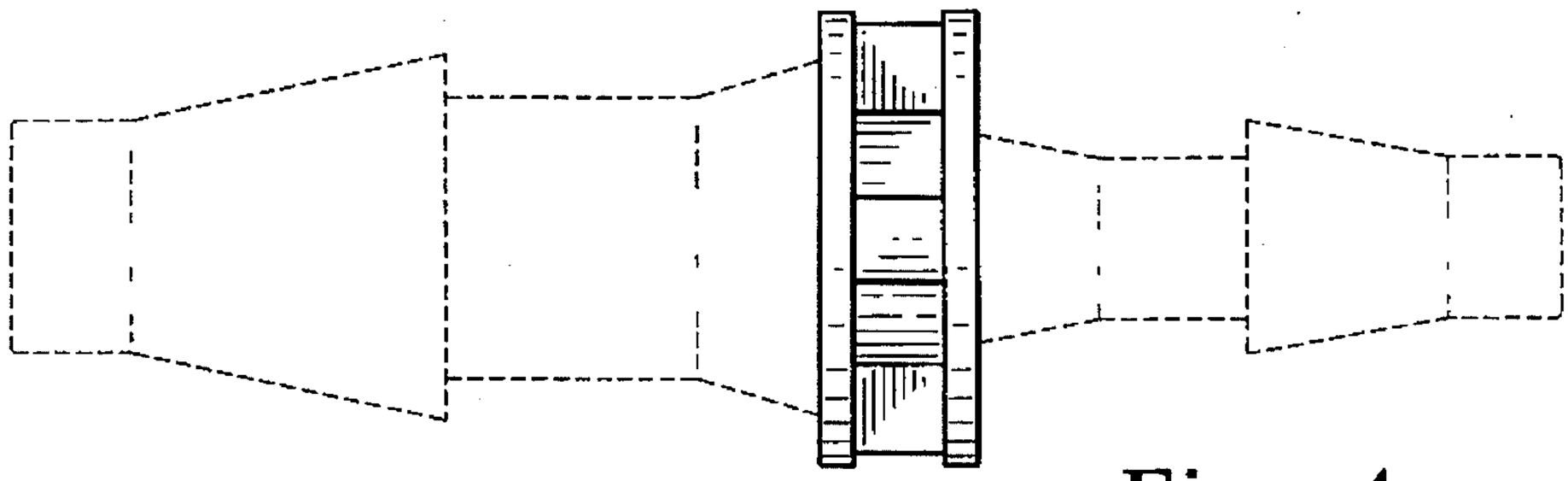

Fig. 4

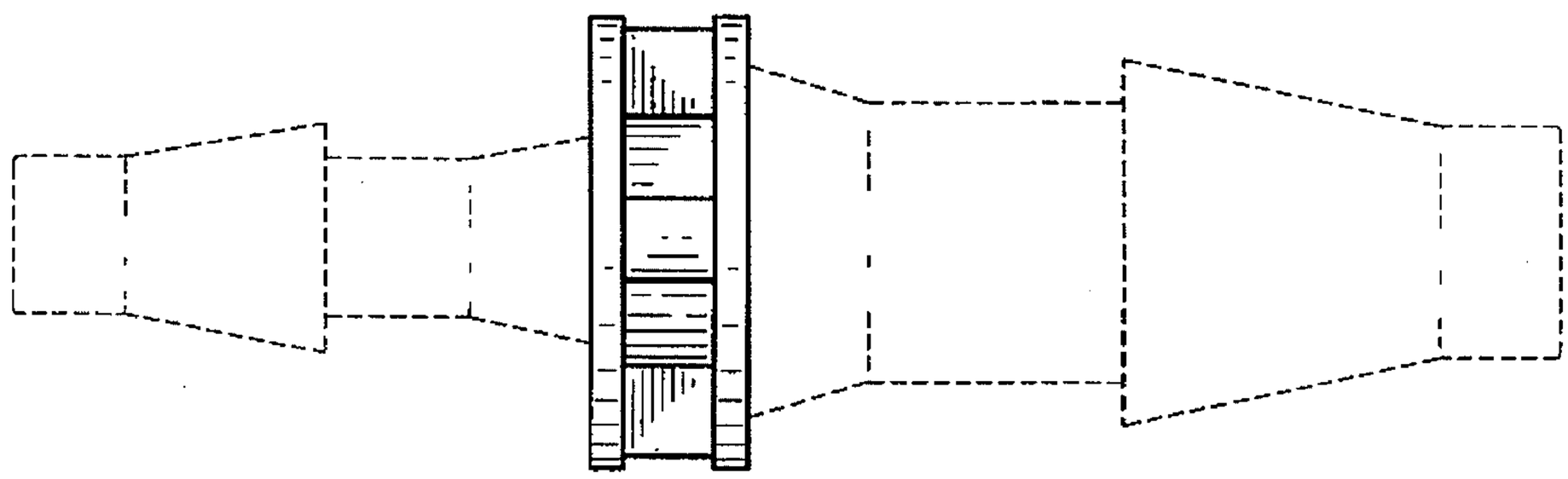

Fig. 5

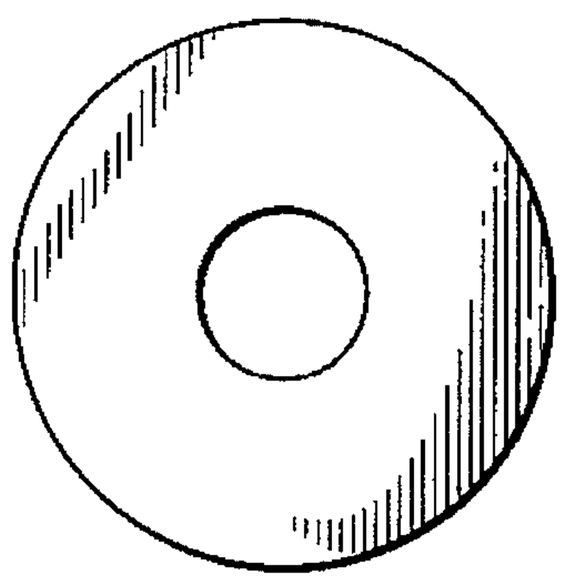

Fig. 6

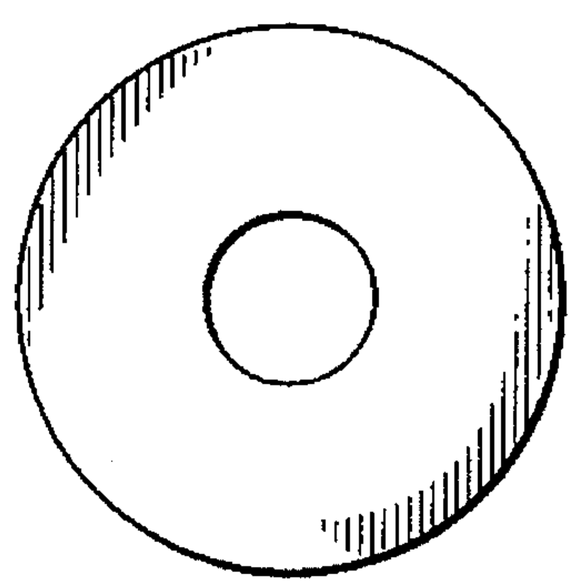

Fig. 7