US00D367256S

United States Patent [19]

Tokunaga

[11] **Patent Number: Des. 367,256**

[45] **Date of Patent: **Feb. 20, 1996**

[54] **STORAGE BATTERY**

[75] Inventor: **Masaya Tokunaga**, Kyoto, Japan

[73] Assignee: **Japan Storage Battery Co., Ltd.**, Kyoto, Japan

[**] Term: **14 Years**

[21] Appl. No.: **36,832**

[22] Filed: **Mar. 28, 1995**

[30] **Foreign Application Priority Data**

Sep. 28, 1994 [JP] Japan 6-29589

[52] **U.S. Cl.** **D13/103**

[58] **Field of Search** D13/103; 429/97, 429/99, 121, 159, 163, 176

[56] **References Cited**

U.S. PATENT DOCUMENTS

D. 323,809	2/1992	Ross, Jr.	D13/103
D. 346,584	5/1994	Taniguchi	D13/103 X
D. 349,483	8/1994	Weaver et al.	D13/130
4,247,603	1/1981	Leffingwell et al.	D13/103 X

OTHER PUBLICATIONS

Batteries on p. 108 of *MCM Electronics Cat No. 27,* Summer '91.

Computer battery on p. 109 of *EDN,* Mar. 30, 1992.

Primary Examiner—Joel Sincavage

Attorney, Agent, or Firm—Sughrue, Mion, Zinn, Macpeak & Seas

[57] **CLAIM**

The ornamental design for a storage battery, as shown.

DESCRIPTION

FIG. **1** is a perspective view of the top, front and left side of a storage battery showing my new design;
FIG. **2** is a left side elevational view thereof;
FIG. **3** is a right side elevational view thereof;
FIG. **4** is a top plan view thereof;
FIG. **5** is a bottom plan view thereof; and,
FIG. **6** is a rear elevational view thereof.

1 Claim, 2 Drawing Sheets

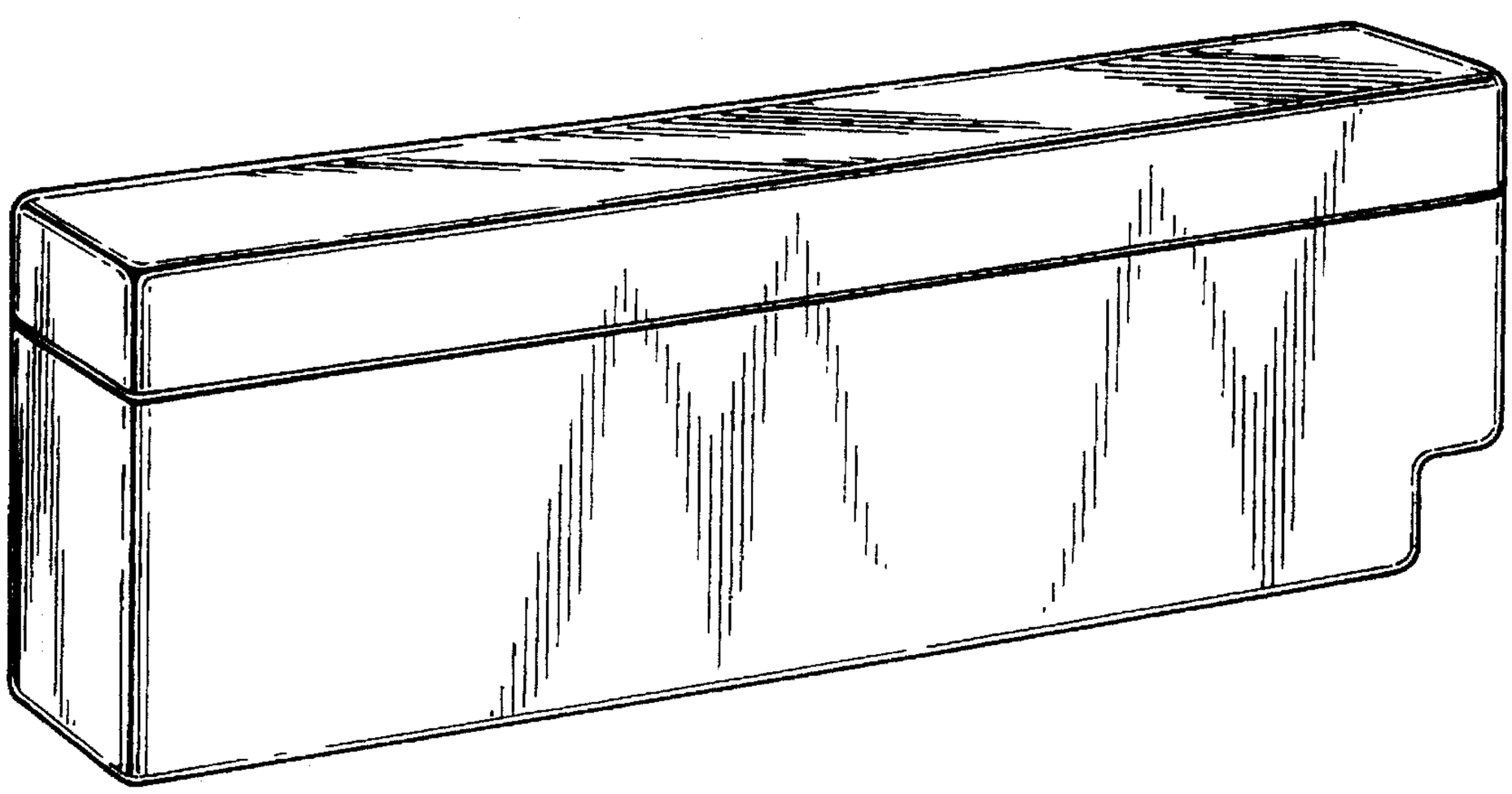

FIG. 1

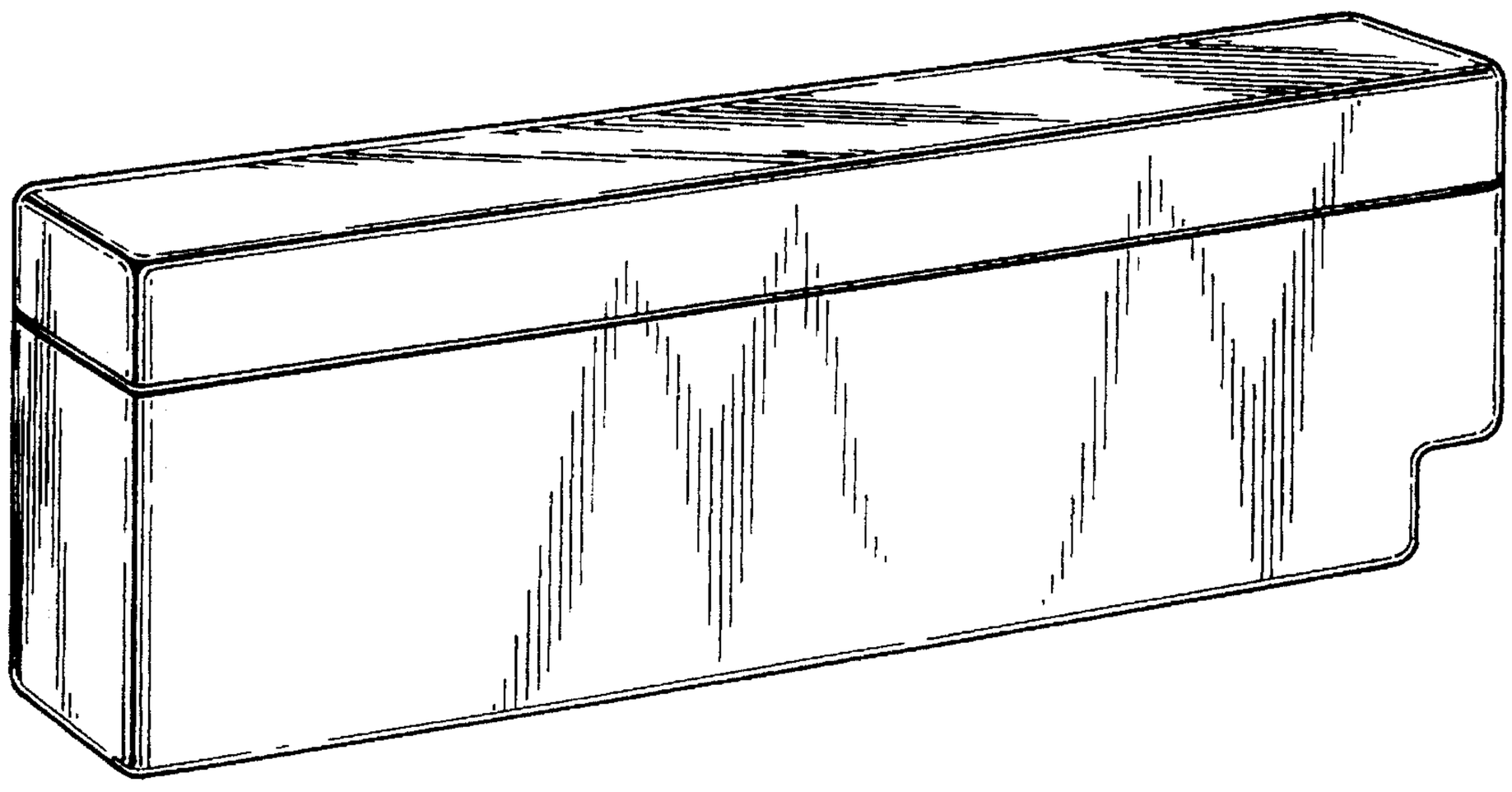

FIG. 2

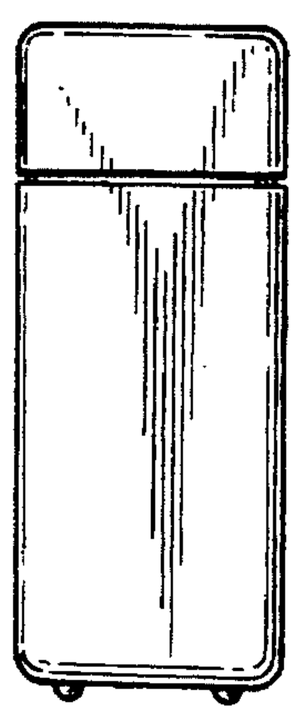

FIG. 3

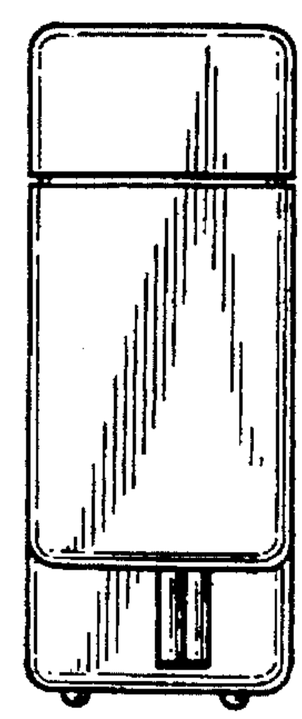

FIG. 4

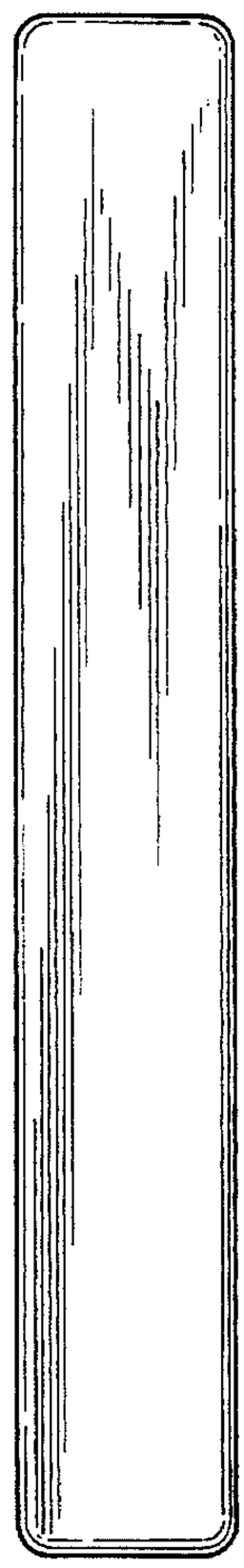

FIG. 5

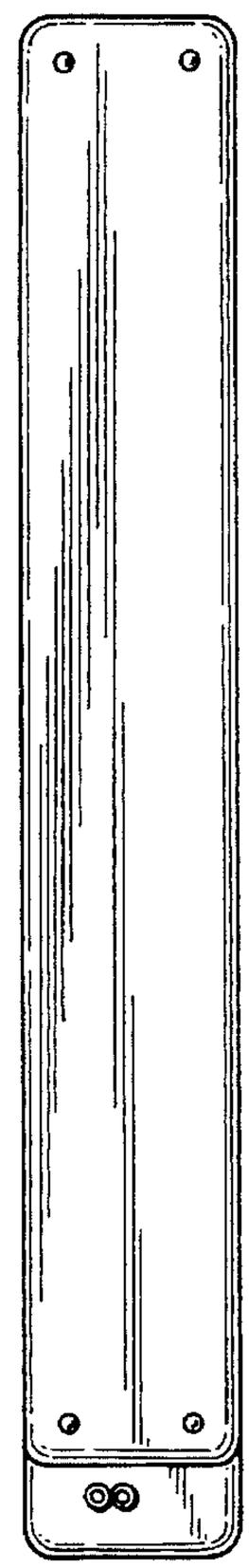
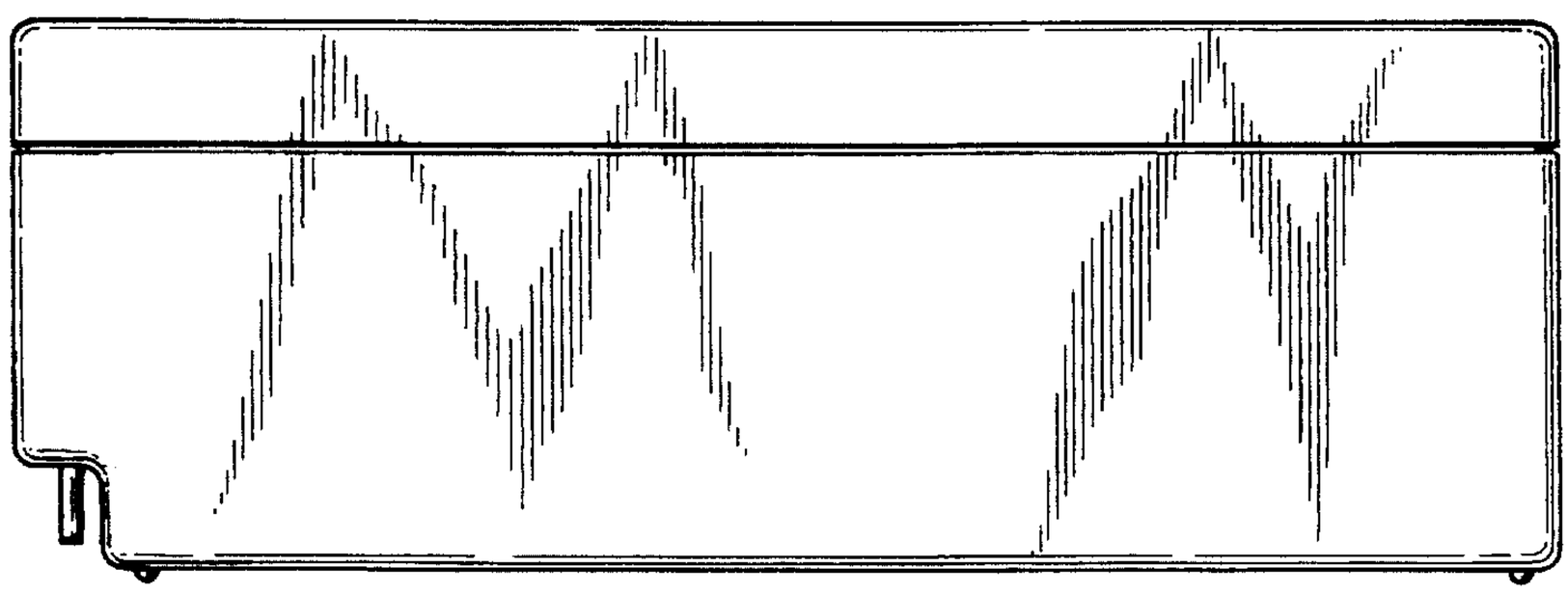
FIG. 6