US00D366463S

# United States Patent [19]

Ive et al.

[11] Patent Number: Des. 366,463

[45] Date of Patent: **Jan. 23, 1996

[54] **HANDHELD COMPUTER HOUSING**

[75] Inventors: **Jonathan P. Ive**, San Francisco; **Ronald J. Moller**, Boulder Creek, both of Calif.

[73] Assignee: **Apple Computer, Inc.**, Cupertino, Calif.

[**] Term: **14 Years**

[21] Appl. No.: **19,471**

[22] Filed: **Mar. 2, 1994**

[52] **U.S. Cl.** ..... **D14/100**; D18/7

[58] **Field of Search** ..... D14/100, 106, D14/115; D18/1, 7, 11, 12; 345/156, 168, 169, 172, 173, 87; 341/22, 23; 364/708.1; 235/454, 462, 472

[56] **References Cited**

U.S. PATENT DOCUMENTS

| | | | |
|---|---|---|---|
| D. 283,711 | 5/1986 | Deura et al. | D18/7 X |
| D. 292,706 | 11/1987 | Fischer | D18/7 X |
| D. 321,865 | 11/1991 | Derocher | D14/100 |
| D. 350,763 | 9/1994 | Matsuda et al. | D18/7 |

OTHER PUBLICATIONS

Cohen, Raines, "Slimmed–Down MessagePad to Beef up RAM, Recognition," MacWEEK, Feb. 14, 1994, vol. 8, No. 7, pp. 1 & 84.

*Primary Examiner*—Freda Nunn
*Attorney, Agent, or Firm*—Hickman & Beyer

[57] **CLAIM**

The ornamental design for a handheld computer housing, as shown and described.

**DESCRIPTION**

FIG. **1** is a top plan view of a handheld computer housing in accordance with the present design;
FIG. **2** is a rear end elevational view of the computer housing;
FIG. **3** is a bottom plan view of the computer housing;
FIG. **4** is a front end elevational view of the computer housing;
FIG. **5** is a left side elevational view of the computer housing;
FIG. **6** is a right side elevational view of the computer housing with a cover of the housing closed;
FIG. **7** is a side elevational view similar to that of FIG. **6** with the cover open and engaging a support surface;
FIG. **8** is a top perspective view of the housing with the cover closed;
FIG. **9** is a reduced top perspective view of the housing with the cover partially opened; and,
FIG. **10** is a bottom perspective view of the housing with the cover fully opened and latched to the bottom of the case.
The broken lines are shown in FIG. **9** for illustrative purposes only and form no part of the claimed design.

**1 Claim, 6 Drawing Sheets**

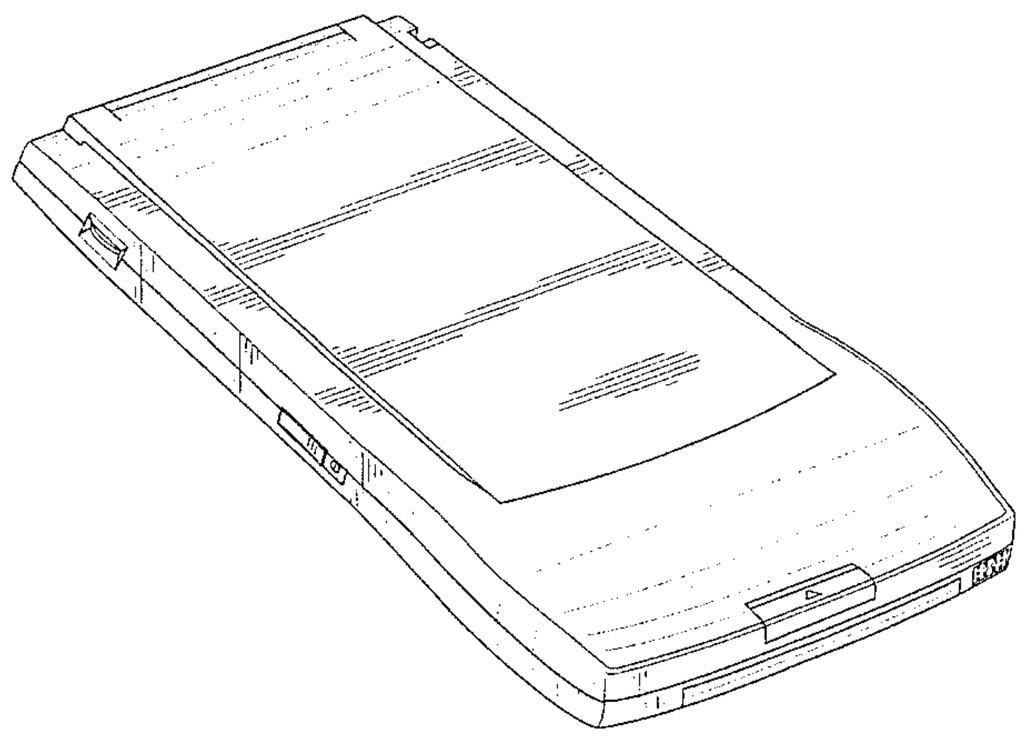

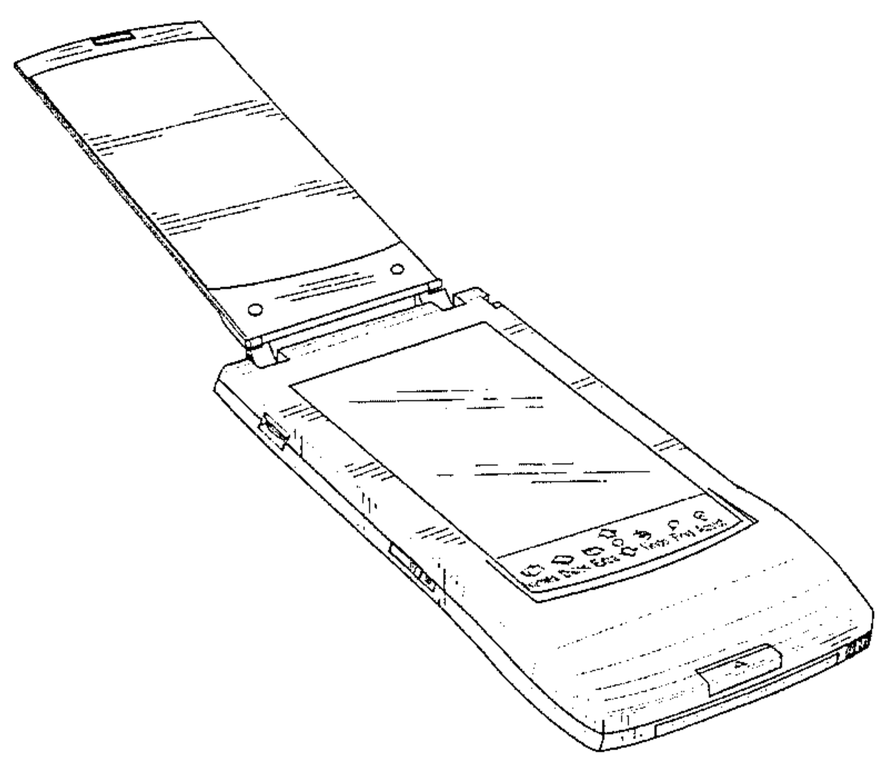

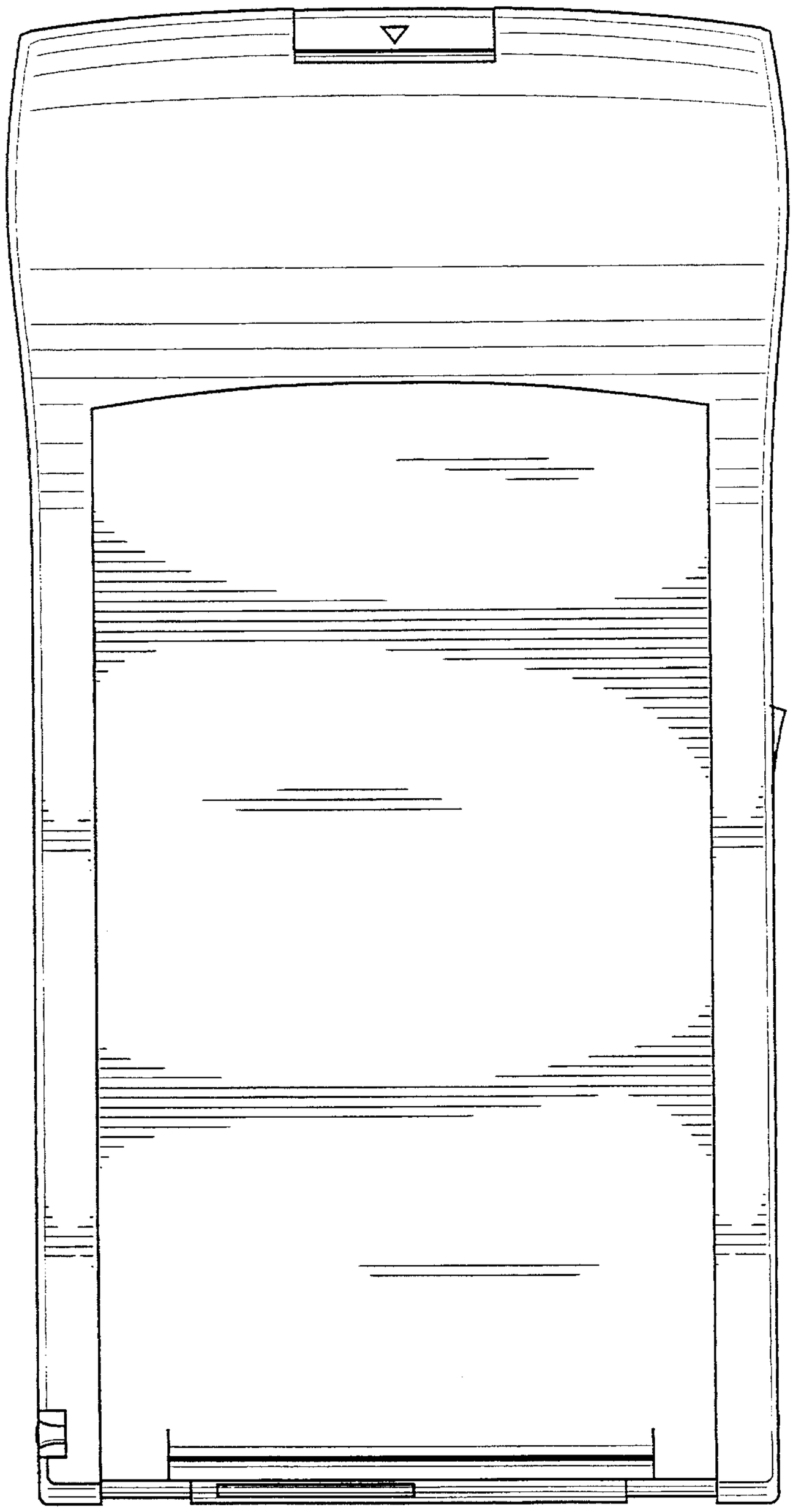

Fig. 1

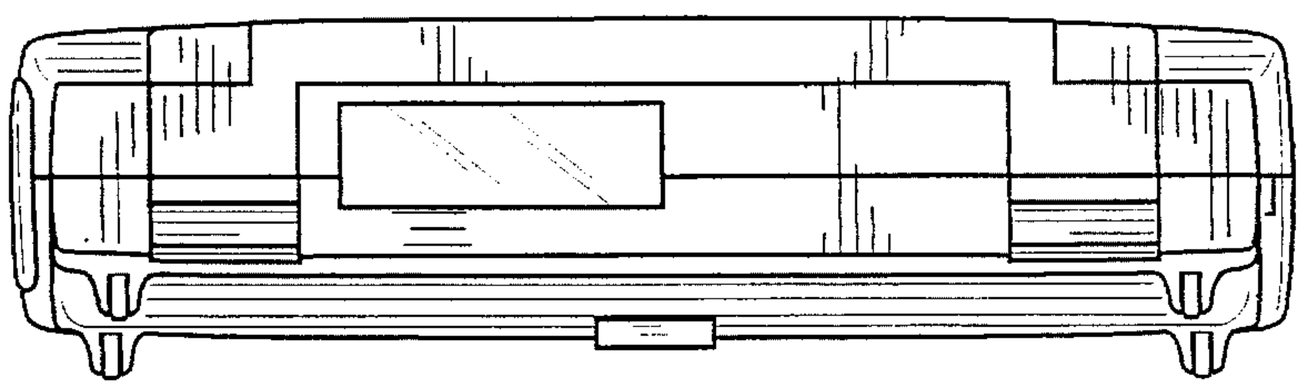

Fig. 2

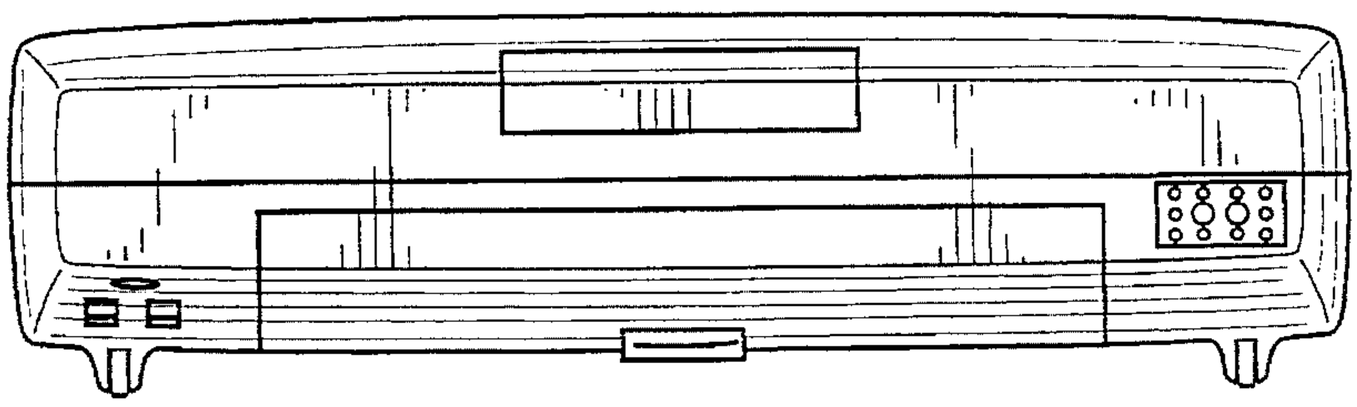

Fig. 4

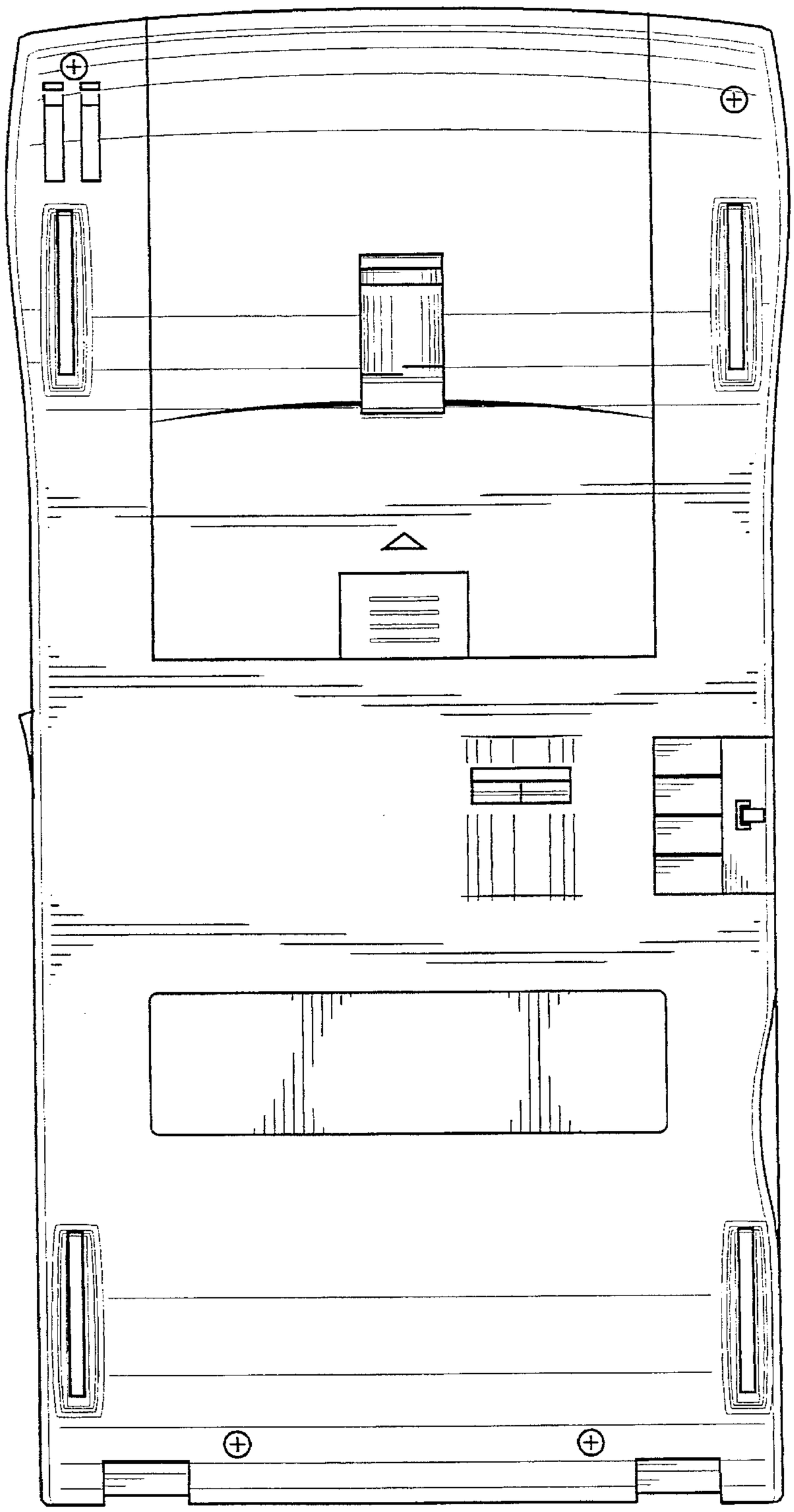

Fig. 3

Fig. 5

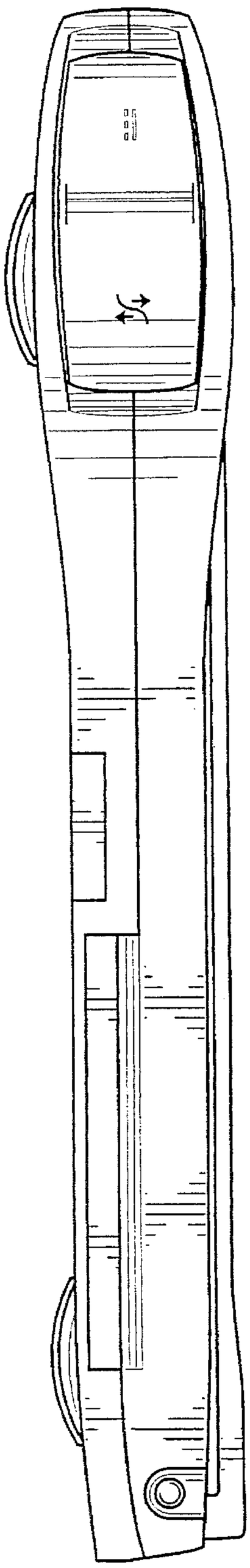

Fig. 7

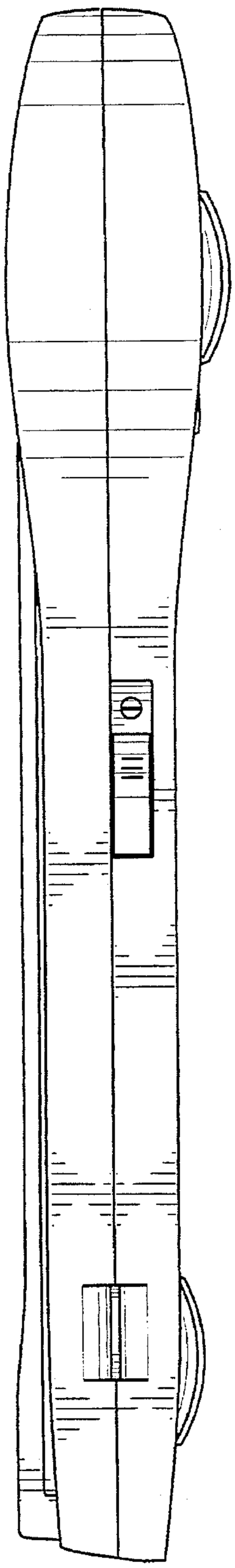

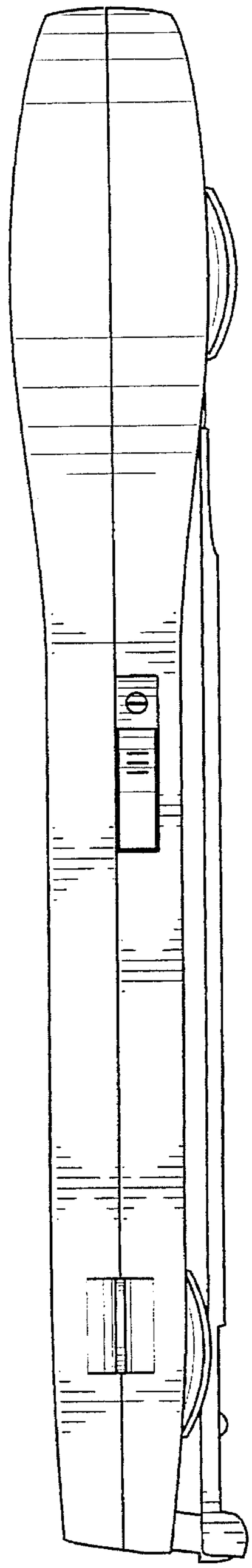

Fig. 6

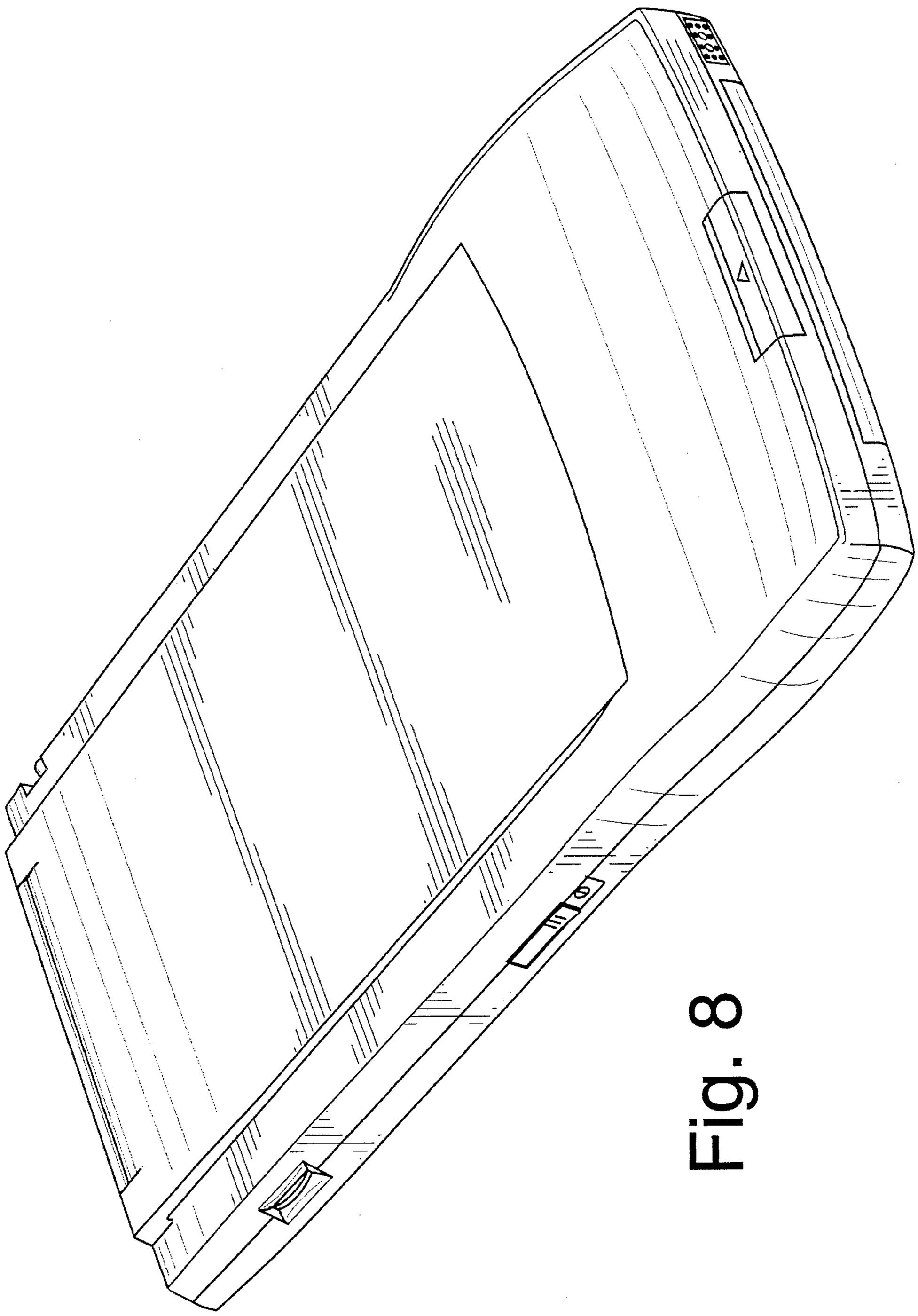

Fig. 8

Fig. 9

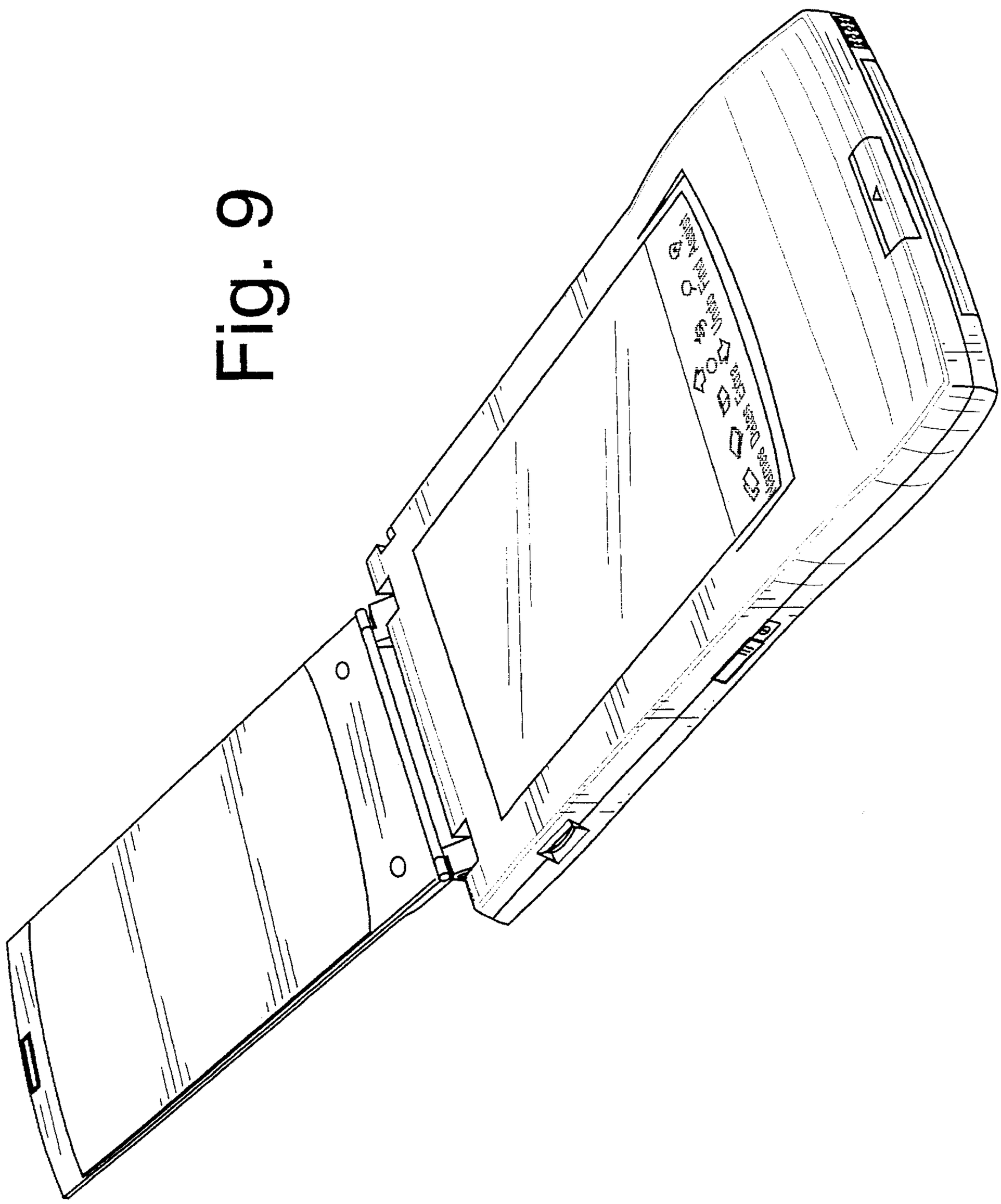
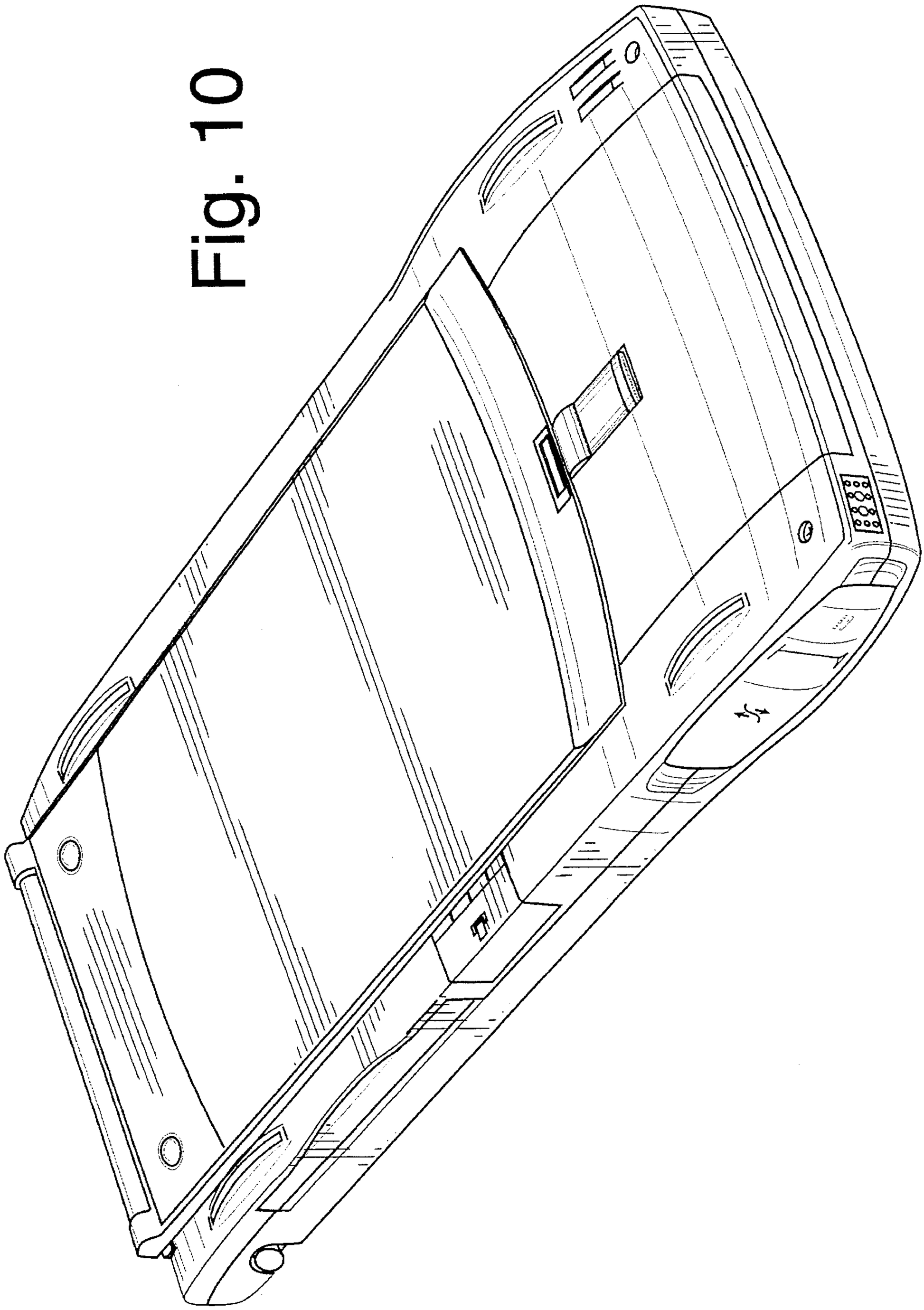
Fig. 10