US00D364332S

United States Patent [19]

Sachs

[11] Patent Number: Des. 364,332

[45] Date of Patent: **Nov. 21, 1995

[54] **ELECTRICAL GROUND BRACKET**

[76] Inventor: **Isaac Sachs**, 283 Newton, Dollard-des-Ormeaux, Quebec, Canada, H9A 3G1

[**] Term: **14 Years**

[21] Appl. No.: **21,896**

[22] Filed: **Apr. 25, 1994**

[52] **U.S. Cl.** **D8/354**; D13/133; D13/154

[58] **Field of Search** ..... D13/133, 154; D8/349, 354, 356, 394, 371; 174/400 CC, 51; 439/92, 95, 97, 98; 361/825; 248/475.1, 488, 490, 492, 496

[56] **References Cited**

U.S. PATENT DOCUMENTS

D. 152,254	1/1949	Gallo	D8/371
D. 185,474	6/1959	Waller	D8/394
D. 297,410	8/1988	Sachs	D8/354 X
D. 343,385	1/1994	Sachs	D13/154
D. 351,825	10/1994	Sachs	D13/154
2,322,798	6/1943	Fischer	248/475.1

FOREIGN PATENT DOCUMENTS

73088	8/1993	Canada .	
609691	10/1948	United Kingdom	248/488

Primary Examiner—Joel Sincavage
Attorney, Agent, or Firm—Foley & Lardner

[57] **CLAIM**

The ornamental design for an electrical ground bracket, as shown and described.

DESCRIPTION

FIG. **1** is a right end, bottom and front perspective view of an electrical ground bracket showing my new design;
FIG. **2** is a right end elevational view thereof;
FIG. **3** is a left end elevational view thereof;
FIG. **4** is a front elevational view thereof;
FIG. **5** is a rear elevational view thereof;
FIG. **6** is a top plan view thereof; and,
FIG. **7** is a bottom plan view thereof.

1 Claim, 1 Drawing Sheet

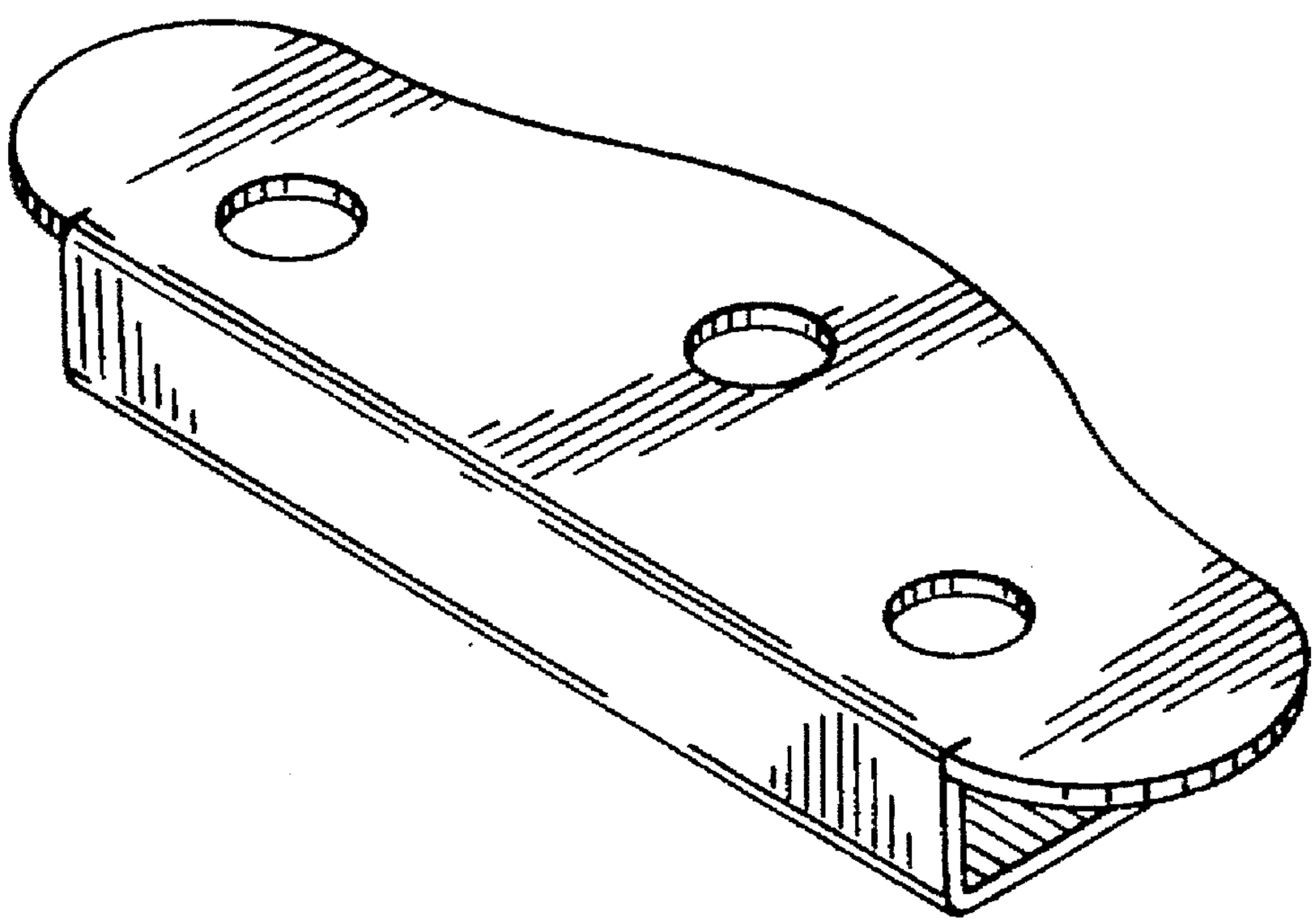

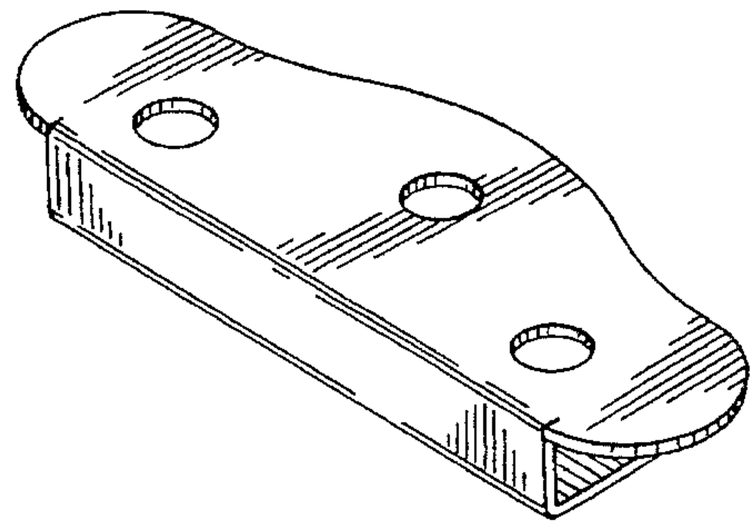

FIG. 1

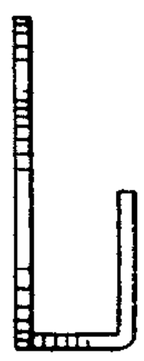

FIG. 2

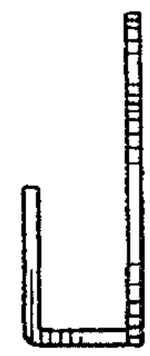

FIG. 3

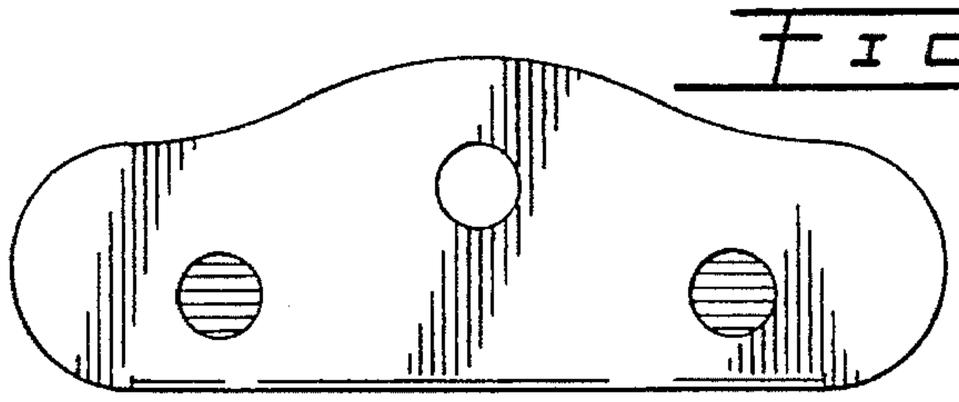

FIG. 4

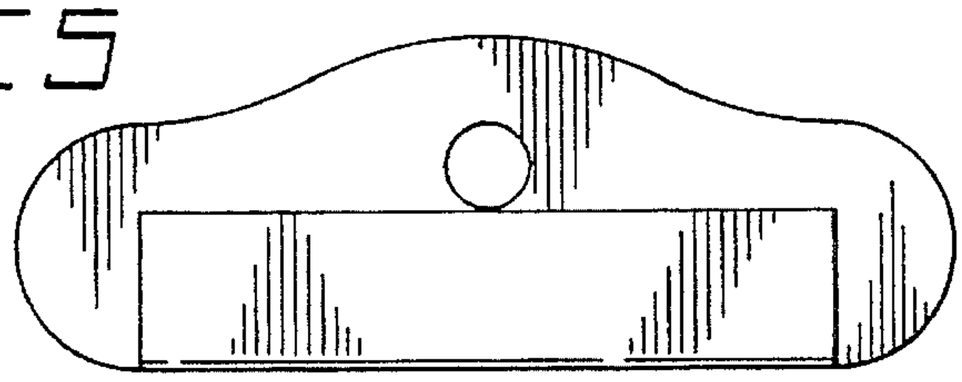

FIG. 5

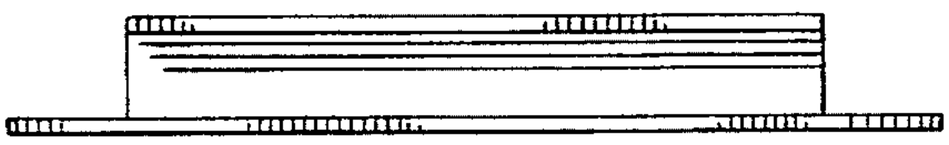

FIG. 6

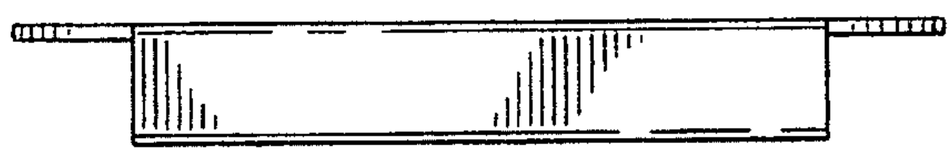

FIG. 7