US00D361892S

United States Patent [19]

Quaintance

[11] Patent Number: Des. 361,892

[45] Date of Patent: ** Sep. 5, 1995

[54] **POULTRY BOX**

[75] Inventor: **Benjamin W. Quaintance,** Germantown, Tenn.

[73] Assignee: **International Paper,** Purchase, N.Y.

[**] Term: **14 Years**

[21] Appl. No.: **18,683**

[22] Filed: **Feb. 14, 1994**

[52] **U.S. Cl.** **D3/305**

[58] **Field of Search** D3/304, 305, 307–309, D3/314; D30/109; 206/586, 557; 217/36, 123; 224/906; 229/108, 120.01, 183, 198.3; 220/DIG. 14

[56] **References Cited**

U.S. PATENT DOCUMENTS

D. 4,359	9/1870	Leslie .	
D. 272,289	1/1984	Segura Palenzuela	D3/314
959,098	5/1910	Adams	217/123 X
1,623,715	4/1927	Berkowitz .	
1,960,635	5/1934	Kinkenon .	
2,000,158	5/1935	Black et al.	206/586
2,660,363	11/1953	Trickett, Jr. et al. .	
3,397,831	8/1968	Adams	206/586 X
3,918,630	11/1975	Meyers .	
4,362,265	12/1982	Williams .	
4,417,686	11/1983	Wozniacki .	
4,792,084	2/1988	Dreeszen .	

FOREIGN PATENT DOCUMENTS

0850436	9/1939	France	206/557
0009488	6/1992	WIPO	220/DIG. 14

Primary Examiner—Terry A. Wallace
Assistant Examiner—Richelle Shelton
Attorney, Agent, or Firm—Michael J. Doyle

[57] **CLAIM**

The ornamental design for a poultry box, as shown and described.

DESCRIPTION

FIG. **1** is a top perspective view of poultry box showing my new design;
FIG. **2** is a top plan view;
FIG. **3** is a bottom plan view;
FIG. **4** is a side elevational view, both side elevational views being identical; and,
FIG. **5** is an end elevational view, both and elevational views being identical.

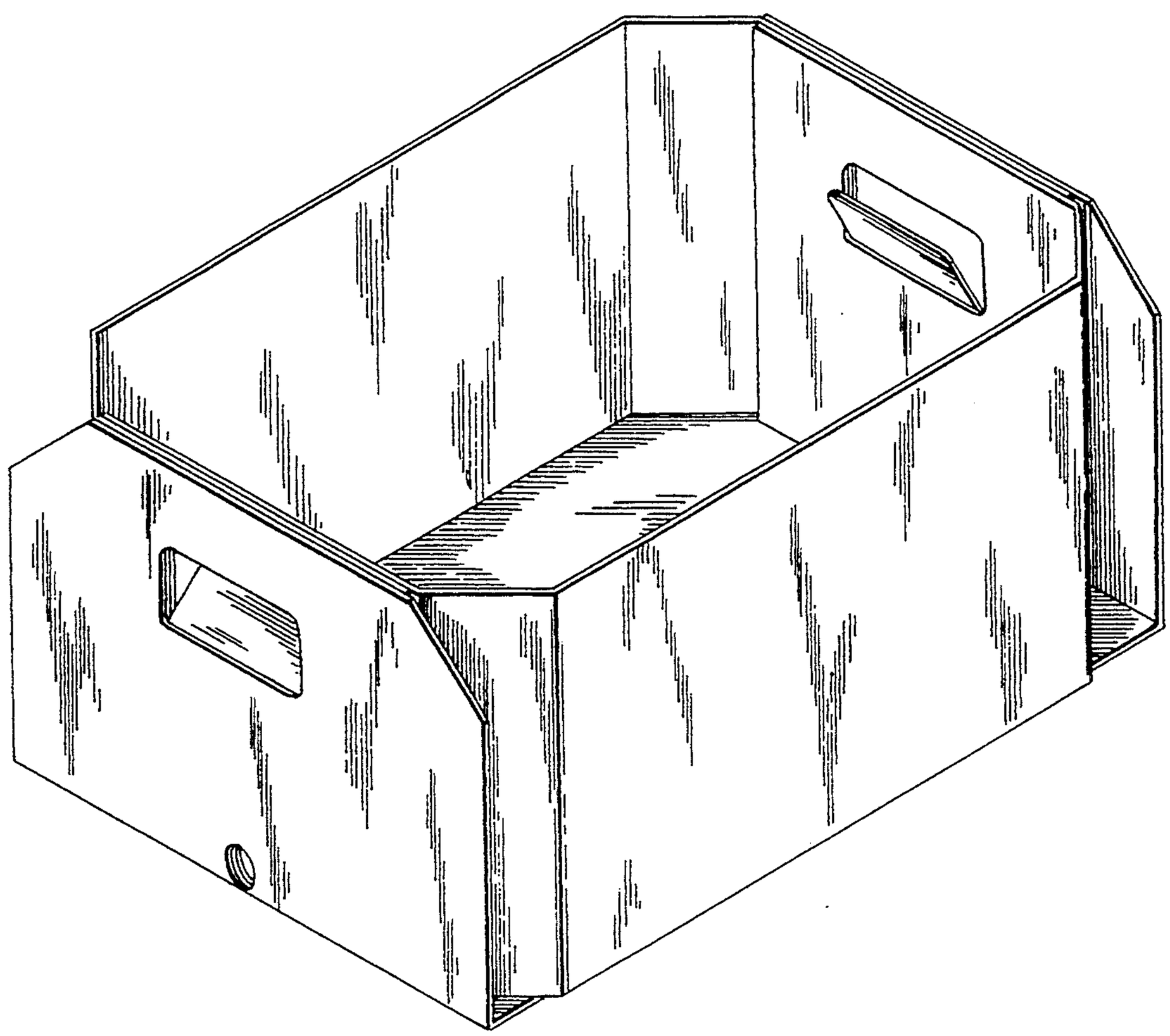

FIG. 1

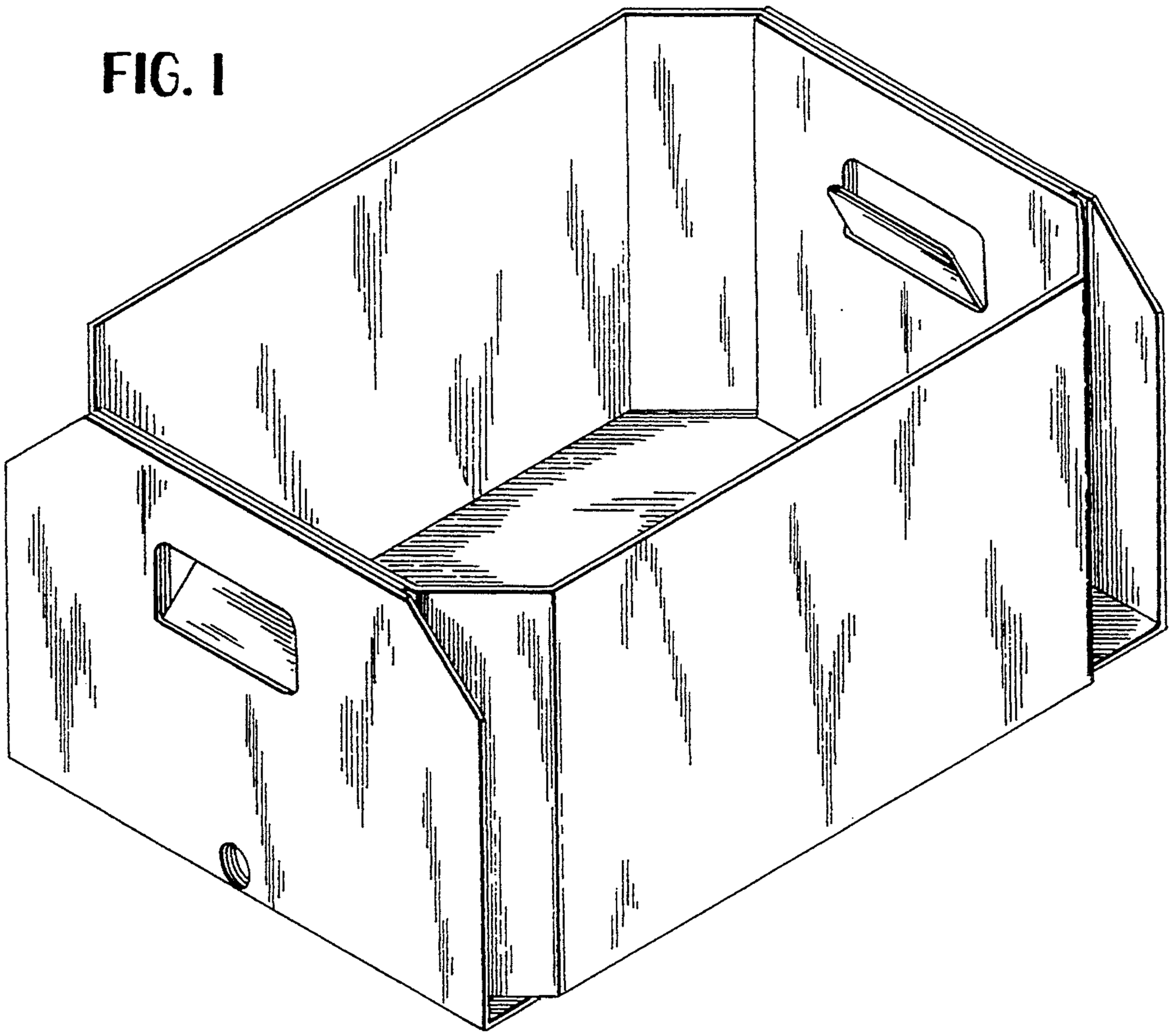

FIG. 2

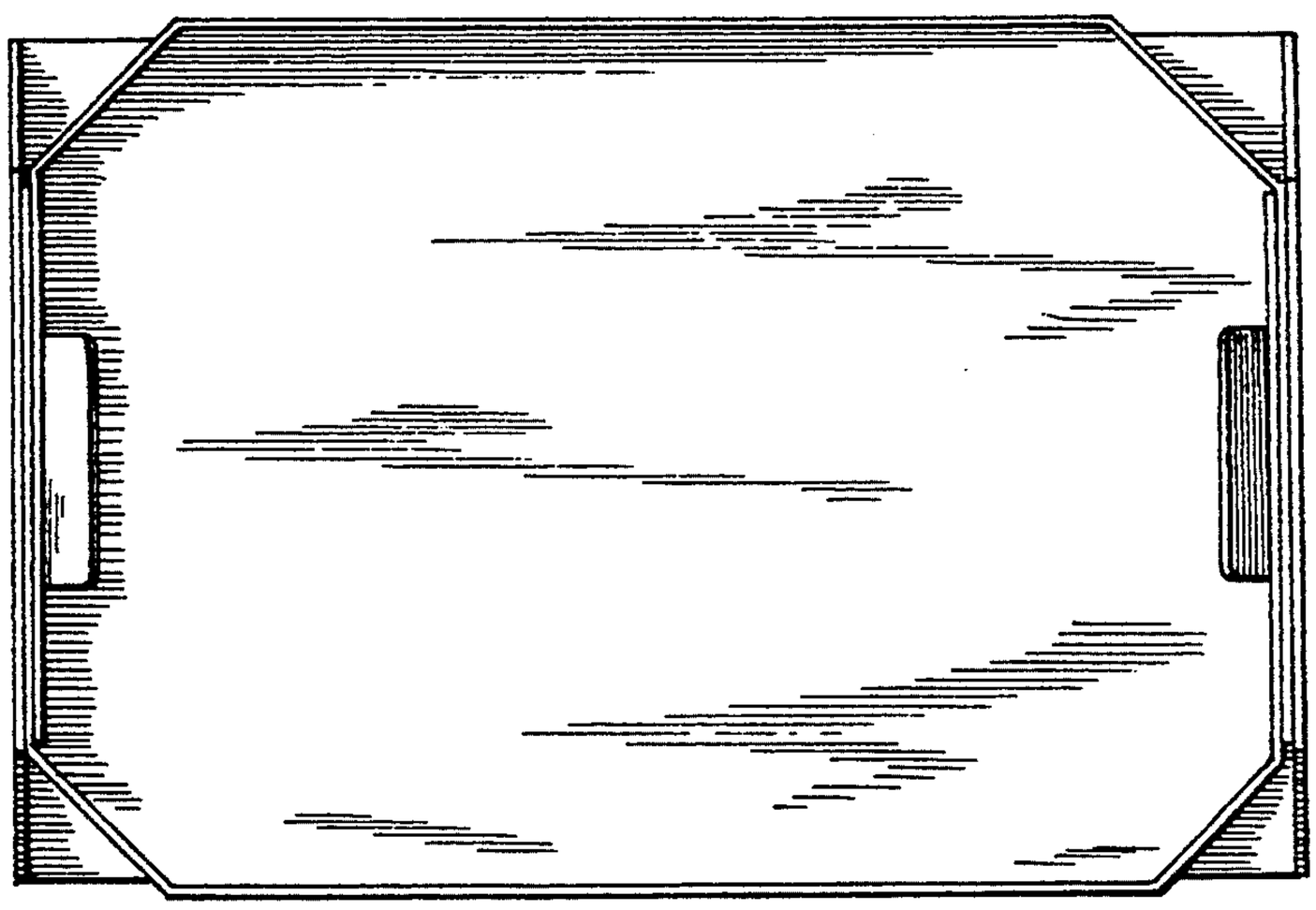

FIG. 3

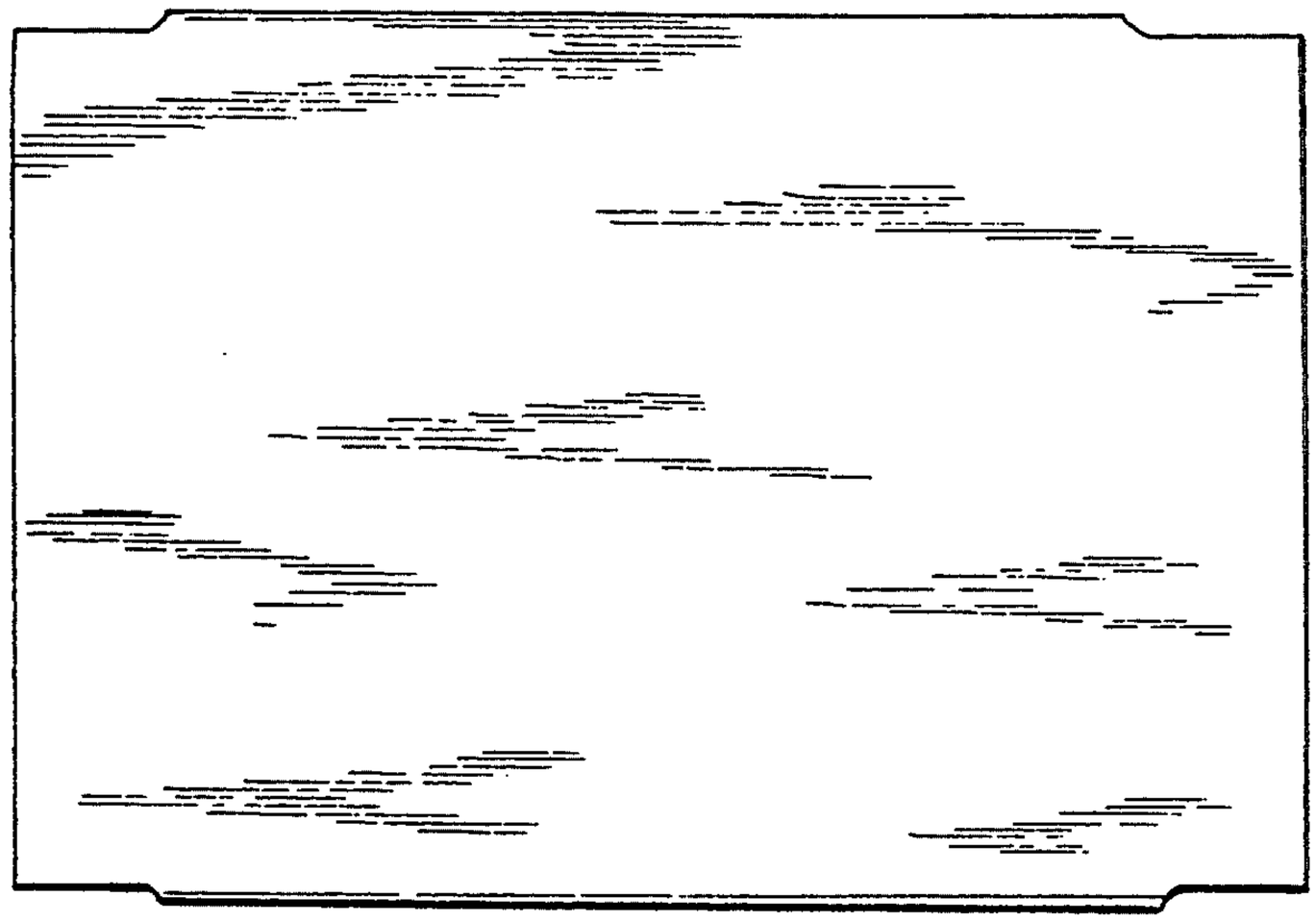

FIG. 4

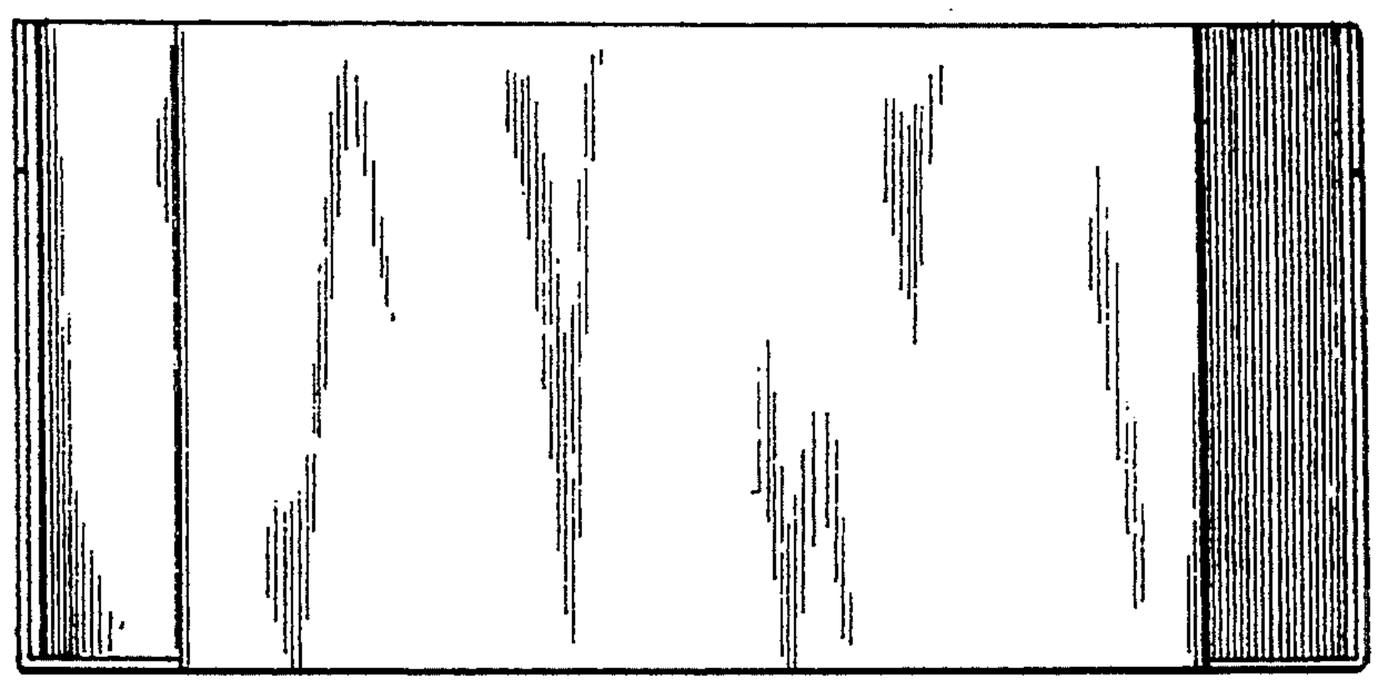
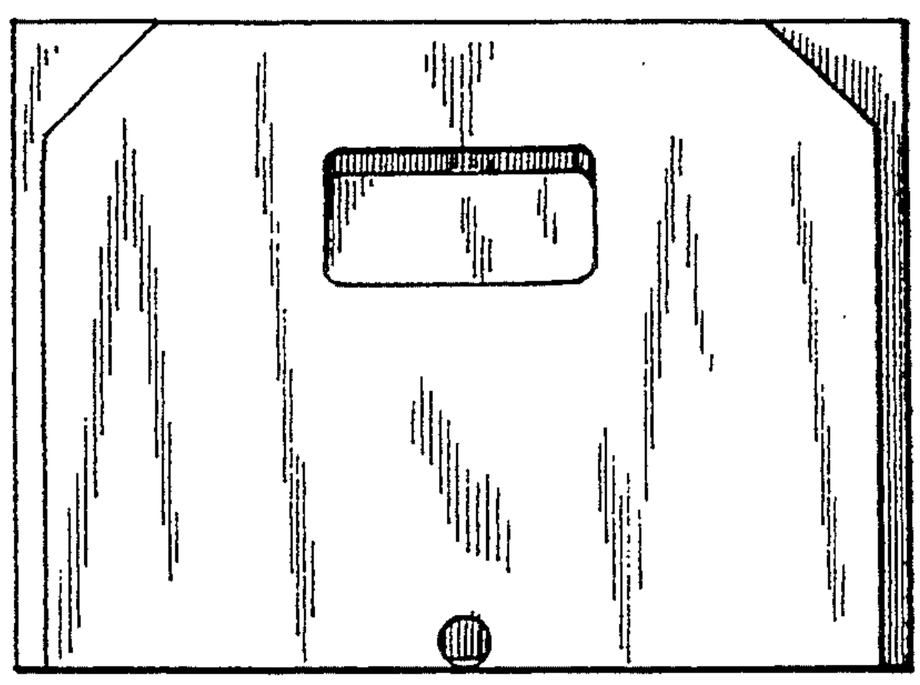
FIG. 5