US00D352594S

United States Patent [19]

Evans

[11] Patent Number: Des. 352,594

[45] Date of Patent: ** Nov. 22, 1994

[54] TURTLENECK TOP FOR A SKATING OUTFIT

[76] Inventor: **Lori Ann G. Evans,** 19917-89th Place West, Edmonds, Wash. 98026

[**] Term: **14 Years**

[21] Appl. No.: **682,717**

[22] Filed: **Apr. 8, 1991**

[52] **U.S. Cl.** **D2/841;** D2/735; D2/840; D2/844; D2/851

[58] **Field of Search** D2/28, 29, 32, 33, 79, D2/735, 840, 841, 842, 844, 851; 2/79

[56] **References Cited**

U.S. PATENT DOCUMENTS

D. 310,596 9/1990 Burger D2/33
4,265,336 12/1986 Derderian 2/79

OTHER PUBLICATIONS

Earnshaw's Oct. 1987; p. 17 Skirted outfit in centre of page.

Primary Examiner—A. Hugo Word

[57] **CLAIM**

The ornamental design for a turtleneck top for a skating outfit, as shown and described.

DESCRIPTION

FIG. **1** is a front elevational view of a turtleneck top for a skating outfit;
FIG. **2** is a rear elevational view thereof;
FIG. **3** is a left side elevational view thereof, the sleeve being shown raised;
FIG. **4** is a right side elevational view thereof, the sleeve being shown raised;
FIG. **5** is a top plan view thereof, the skirt being raised, the sleeves out to the sides;
FIG. **6** is a bottom plan view of FIG. **5;** and,
FIG. **7** is rear elevational view of FIG. **1,** the skirt shown raised.

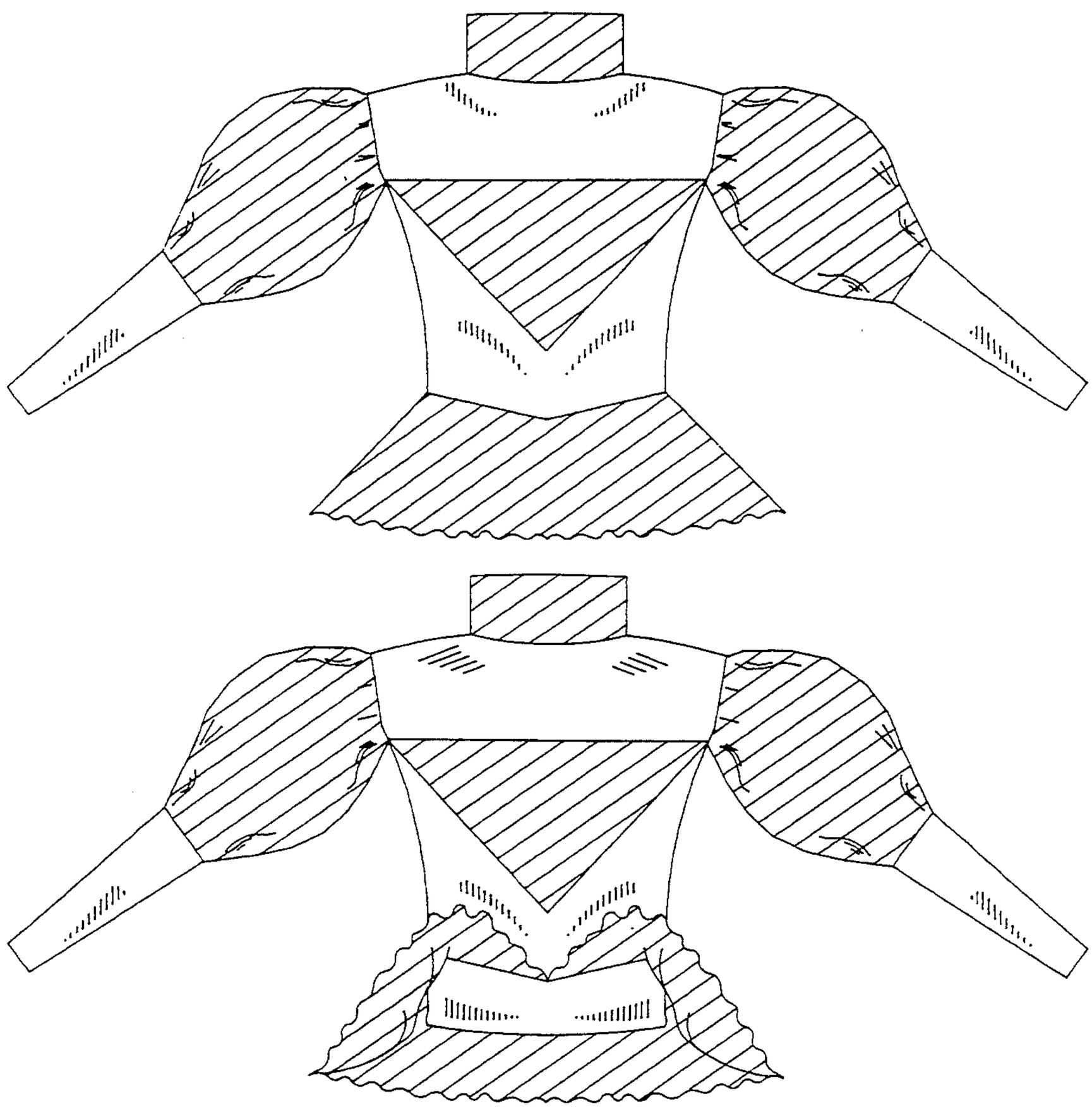

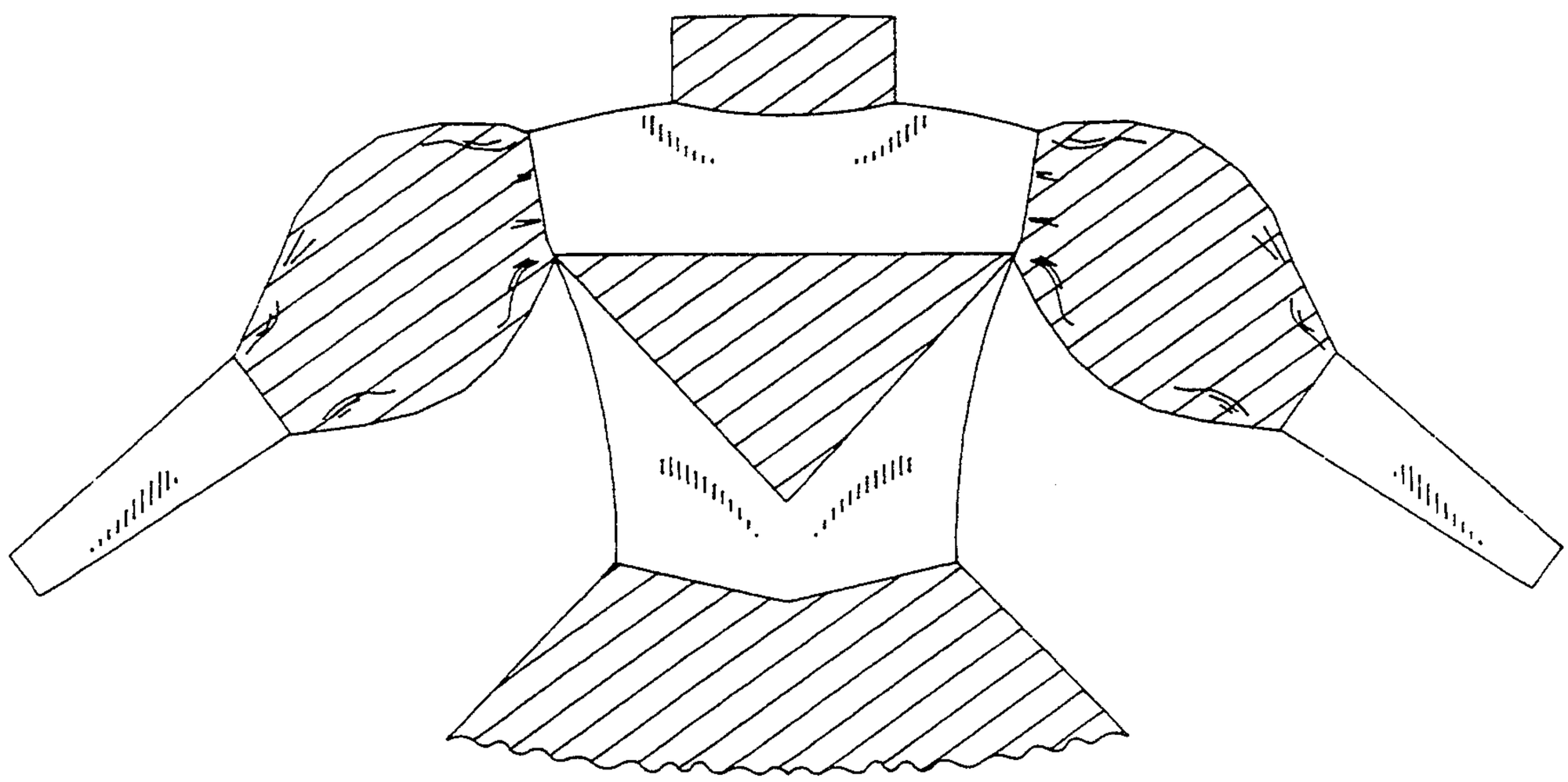

FIG. 1

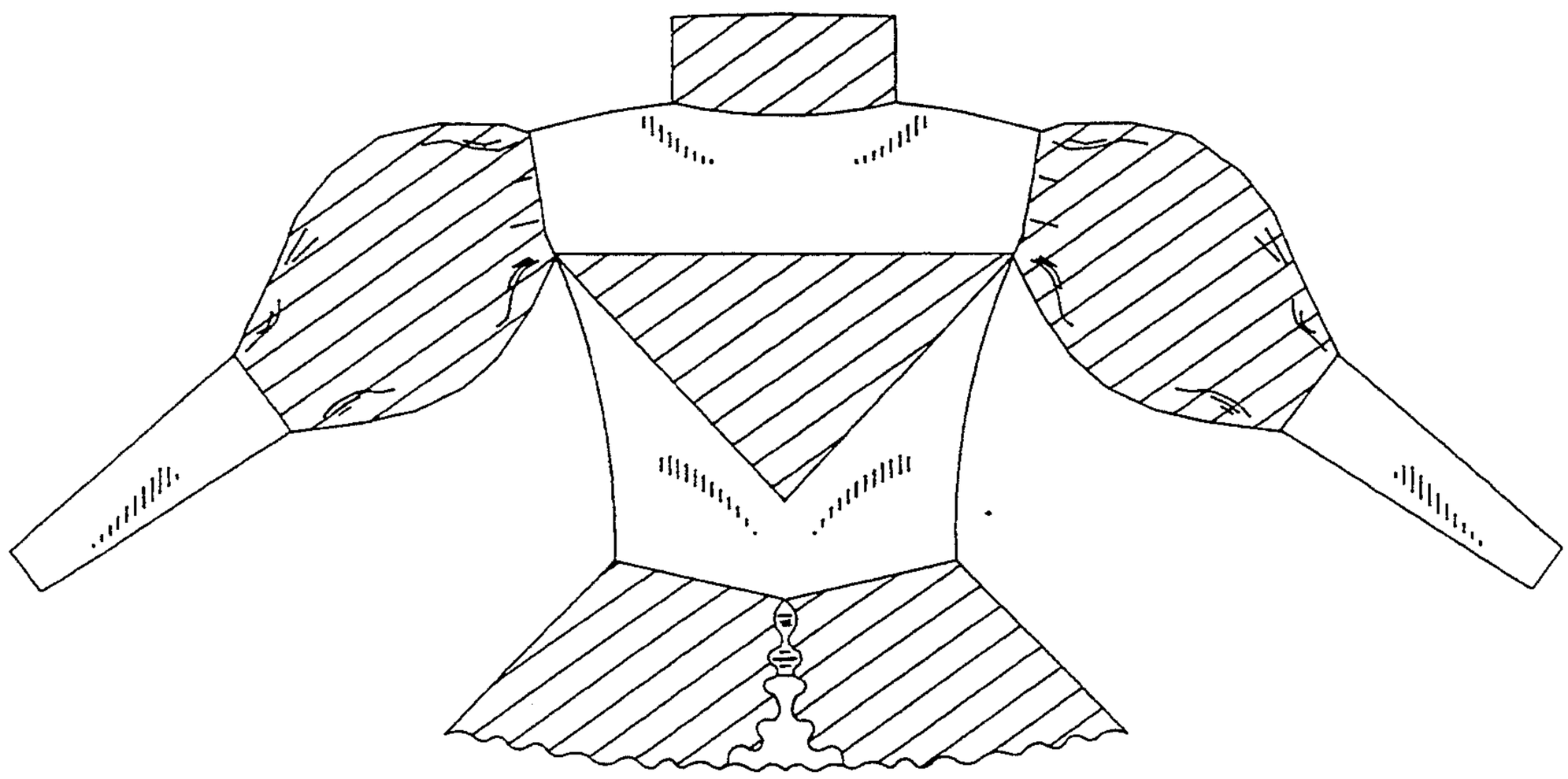

FIG. 2

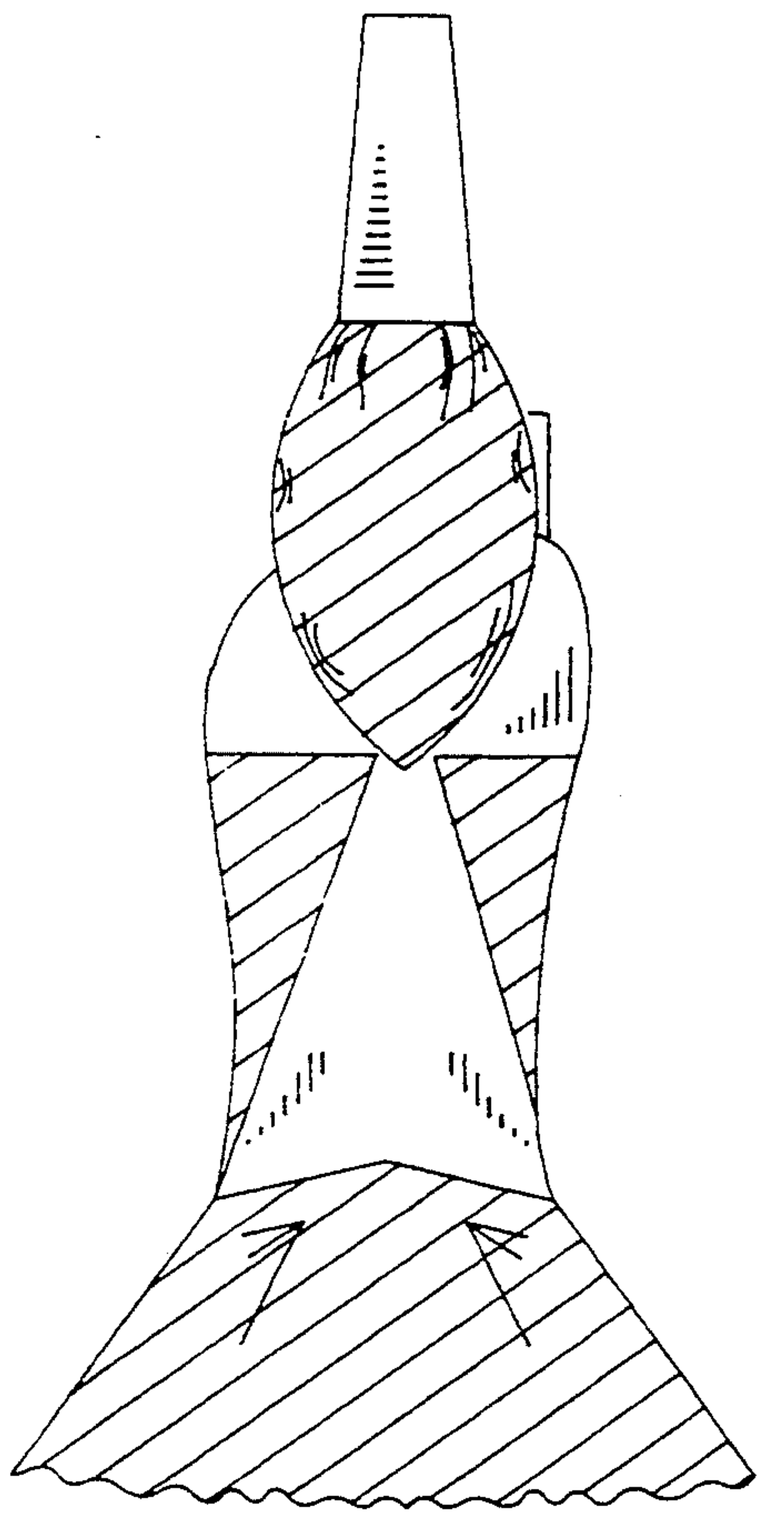

FIG. 3

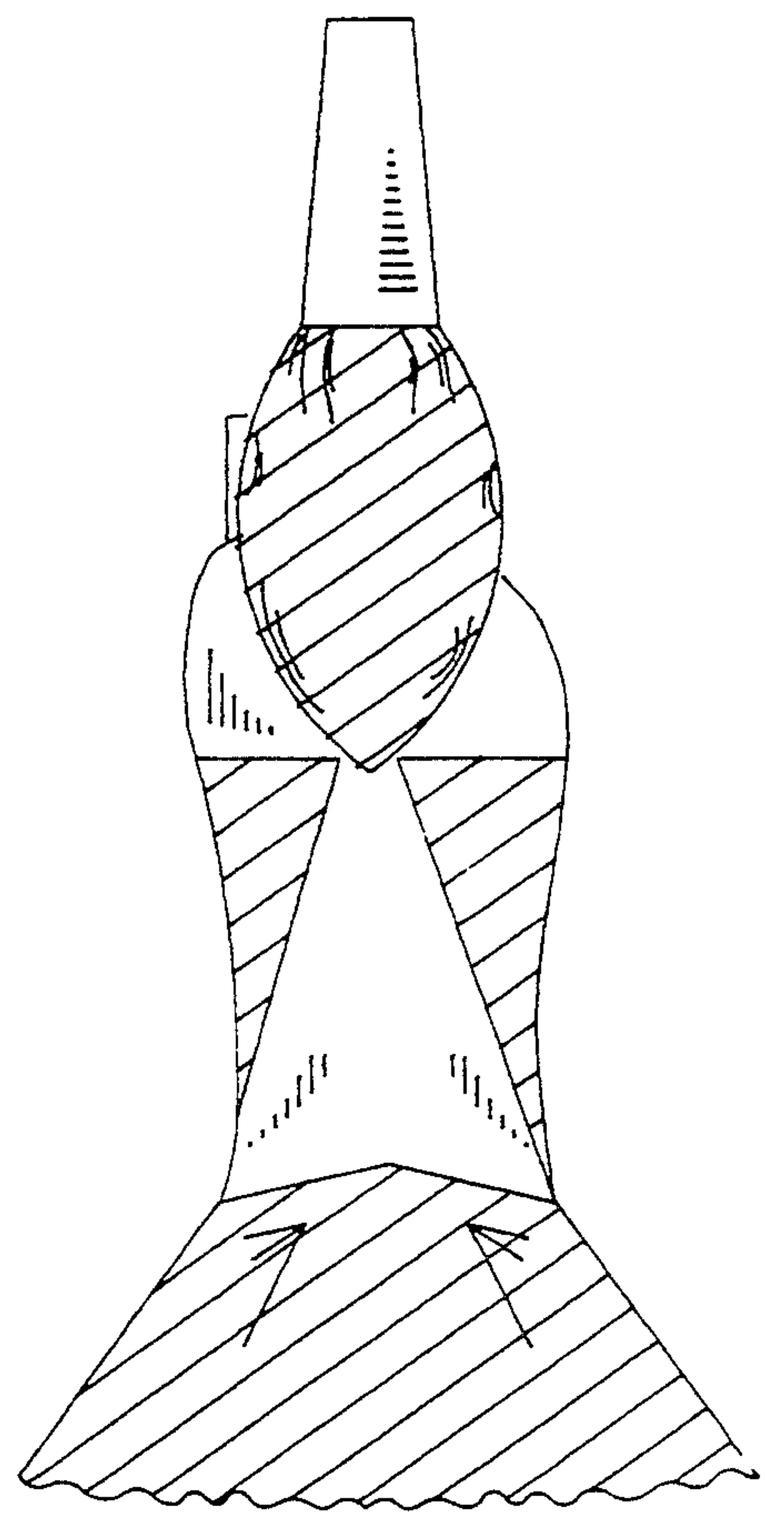

FIG. 4

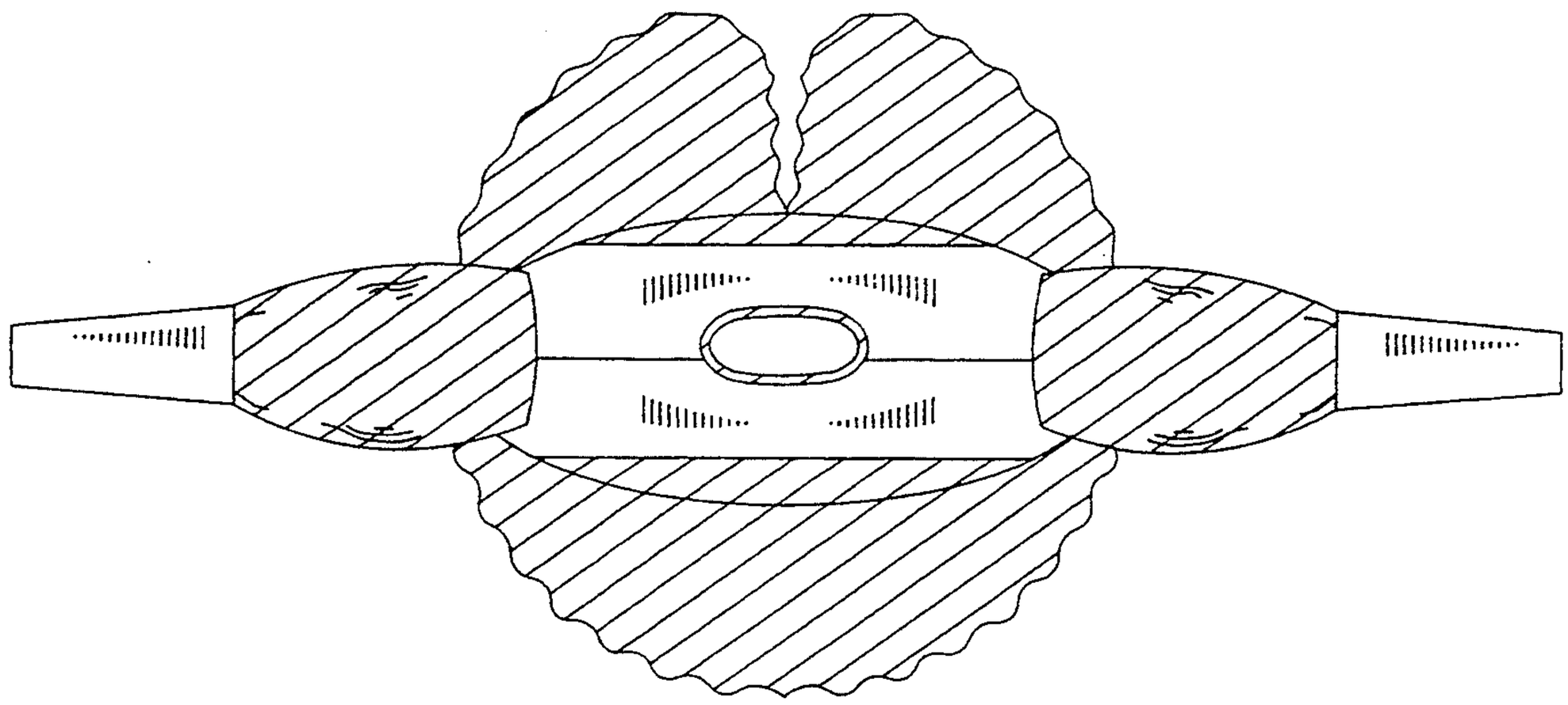

FIG. 5

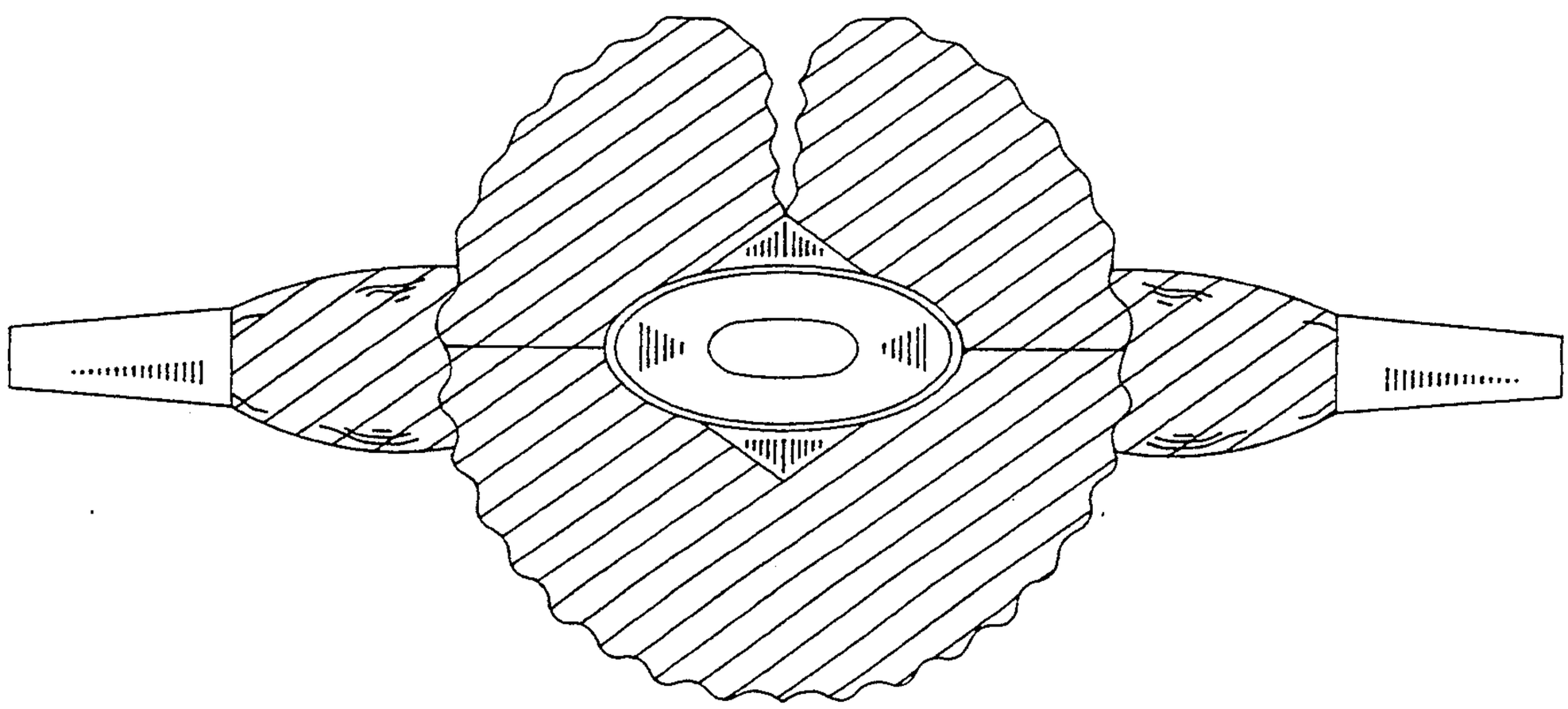

FIG. 6

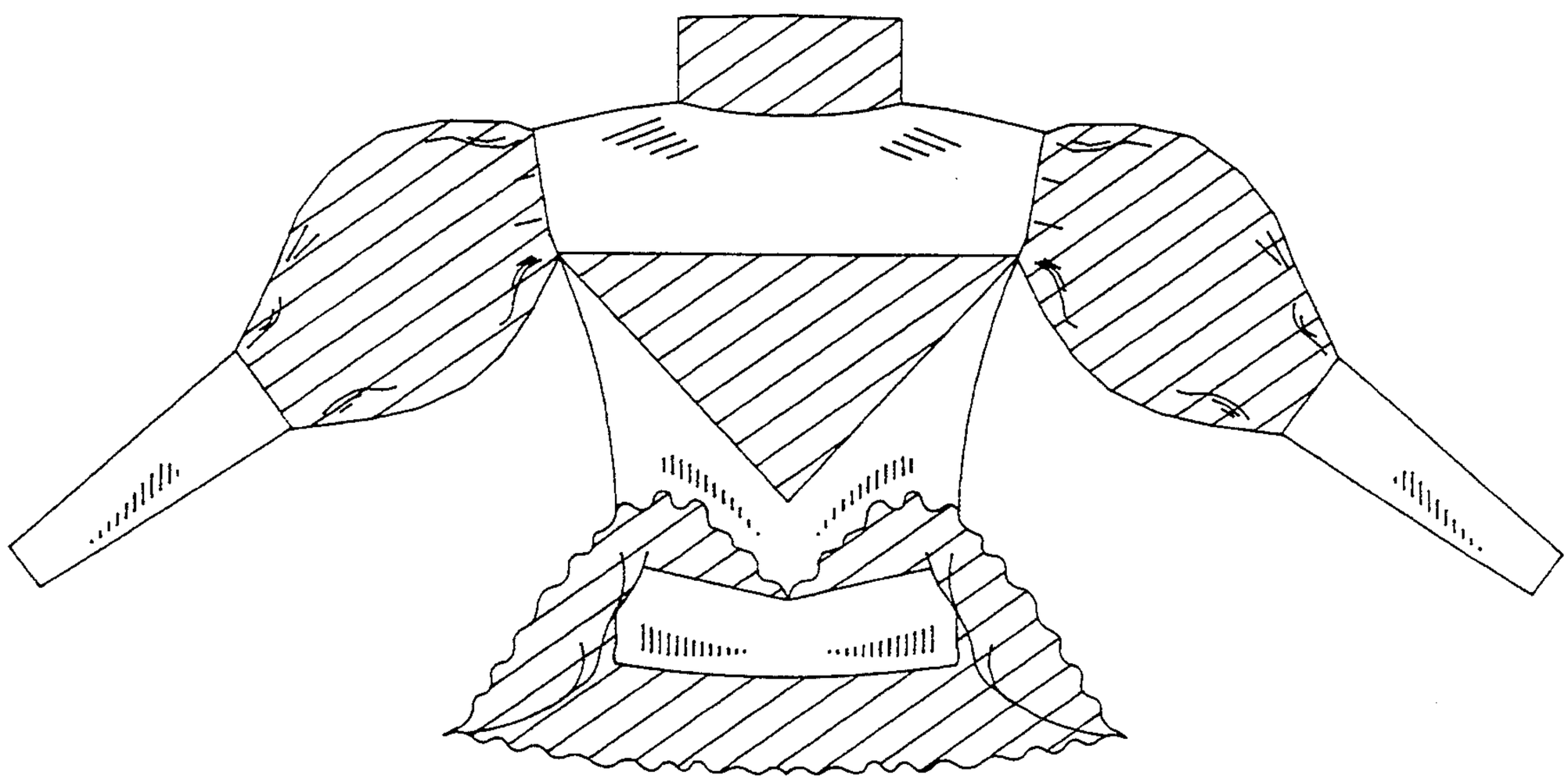

FIG. 7