US00D347742S

United States Patent [19]

Schwartz

[11] Patent Number: Des. 347,742

[45] Date of Patent: ** Jun. 14, 1994

[54] **ARM CHAIR**

[75] Inventor: **Larry A. Schwartz**, Franklin Lakes, N.J.

[73] Assignee: **Omni Products International, Inc.**, Richmond, Va.

[**] Term: **14 Years**

[21] Appl. No.: **877,596**

[22] Filed: **May 1, 1992**

[52] **U.S. Cl.** **D6/373**; D6/370; D6/379

[58] **Field of Search** D6/334, 370, 371, 373, D6/374, 375, 376, 379, 380, 500, 501, 502; 297/419, 445

[56] **References Cited**

U.S. PATENT DOCUMENTS

D. 94,089 12/1934 Lucas .
D. 113,144 1/1939 Meitner .

(List continued on next page.)

OTHER PUBLICATIONS

Omni Casual Furniture Catalog vol. Vii, 1989, p. 4.

Primary Examiner—Alan P. Douglas
Assistant Examiner—Gary D. Watson
Attorney, Agent, or Firm—Lerner, David, Littenberg, Krumholz & Mentlik

[57] **CLAIM**

The ornamental design for an arm chair, as shown and described.

DESCRIPTION

FIG. **1** is a perspective view, taken slightly from above, of an arm chair showing my new design;
FIG. **2** is a front elevational view;
FIG. **3** is a top plan view;
FIG. **4** is a right side elevational view, the left side elevational view being a mirror image thereof;
FIG. **5** is a rear elevational view;
FIG. **6** is a bottom plan view;
FIG. **7** is a perspective view, taken slightly from above, of a second embodiment of an arm chair showing my new design;
FIG. **8** is a front elevational view;
FIG. **9** is a top plan view;
FIG. **10** is a right side elevational view, the left side elevational view being a mirror image thereof;
FIG. **11** is a rear elevational view;
FIG. **12** is a bottom plan view;
FIG. **13** is a perspective view, taken slightly from above, of a third embodiment of an arm chair showing my new design;
FIG. **14** is a front elevational view;
FIG. **15** is a top plan view;
FIG. **16** is a right side elevational view, the left side elevational view being a mirror image thereof;
FIG. **17** is a rear elevational view;
FIG. **18** is a bottom plan view;
FIG. **19** is a perspective view, taken slightly from above, of a fourth embodiment of an arm chair showing my new design;
FIG. **20** is a front elevational view;
FIG. **21** is a top plan view;
FIG. **22** is a right side elevational view, the left side elevational view being a mirror image thereof;
FIG. **23** is a rear elevational view;
FIG. **24** is a bottom plan view;
FIG. **25** is a perspective view, taken slightly from above, of a fifth embodiment of an arm chair showing my new design;
FIG. **26** is a front elevational view;
FIG. **27** is a top plan view;
FIG. **28** is a right side elevational view, the left side elevational view being a mirror image thereof;
FIG. **29** is a rear elevational view;
FIG. **30** is a bottom plan view;
FIG. **31** is a perspective view, taken slightly from above, of a sixth embodiment of an arm chair showing my new design;
FIG. **32** is a front elevational view;
FIG. **33** is a top plan view;
FIG. **34** is a right side elevational view, the left side elevational view being a mirror image thereof;
FIG. **35** is a rear elevational view; and,
FIG. **36** is a bottom plan view.

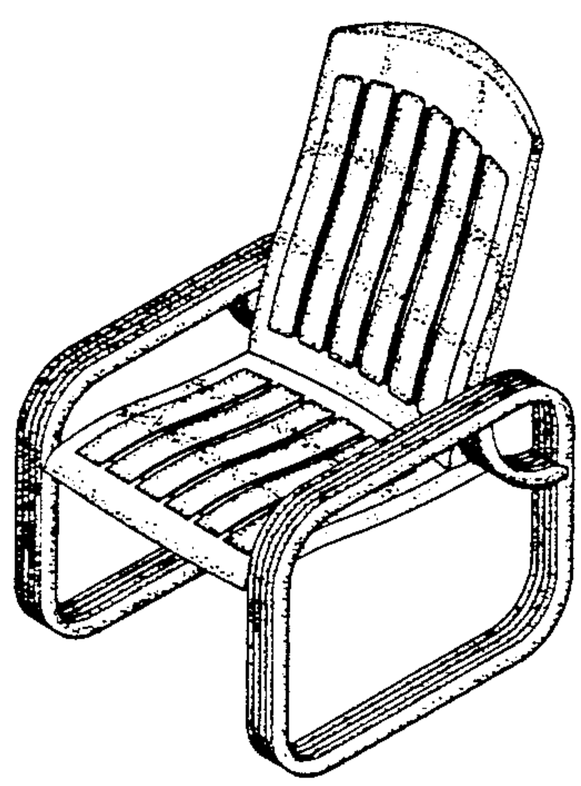

U.S. PATENT DOCUMENTS

D. 113,406 2/1939 Uber .
D. 141,648 6/1945 Bannister .
D. 145,678 10/1946 Roth .
D. 213,438 3/1969 Koch .
D. 222,450 10/1971 Brook D6/373
D. 223,569 5/1972 Grosfillex .
D. 235,947 7/1975 Oyeda D6/373
D. 252,904 9/1979 Springfield .
D. 252,905 9/1979 Springfield .
D. 270,215 8/1983 Ochsner D6/373
D. 277,241 1/1985 Massonnet .
D. 277,917 3/1985 Slakman .
D. 279,947 8/1985 Ballarini .
D. 281,935 12/1985 Lowsky D6/373
D. 281,941 12/1985 Ambasz et al. .
D. 296,848 7/1988 Colby .
D. 298,787 12/1988 Greene .
D. 300,587 4/1989 Uredat .
D. 311,460 10/1990 Greene .
D. 313,515 1/1991 Wood .
D. 323,249 1/1992 Schwartz .
D. 325,837 5/1992 Schwartz .

FIG. 1

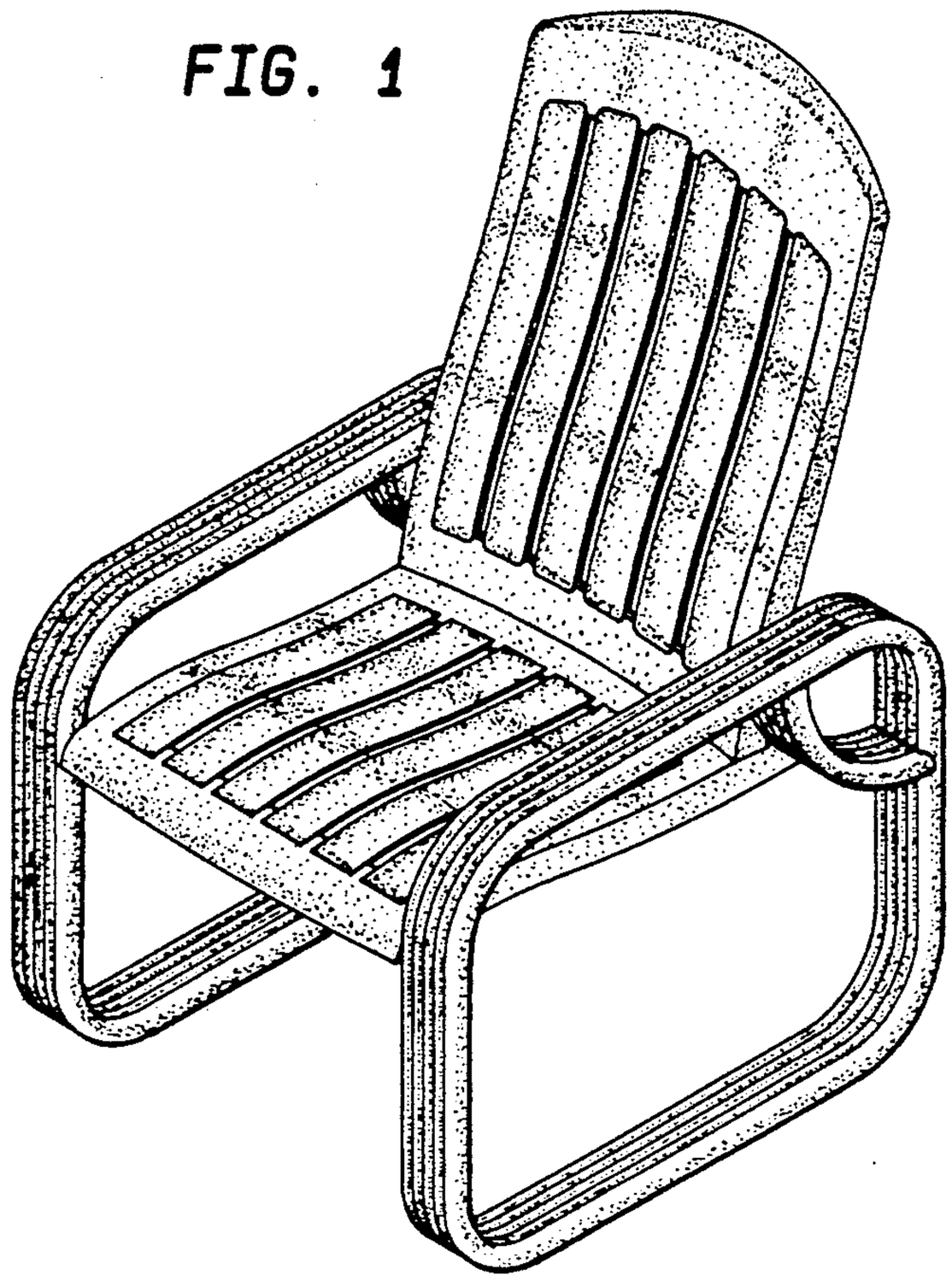

FIG. 2

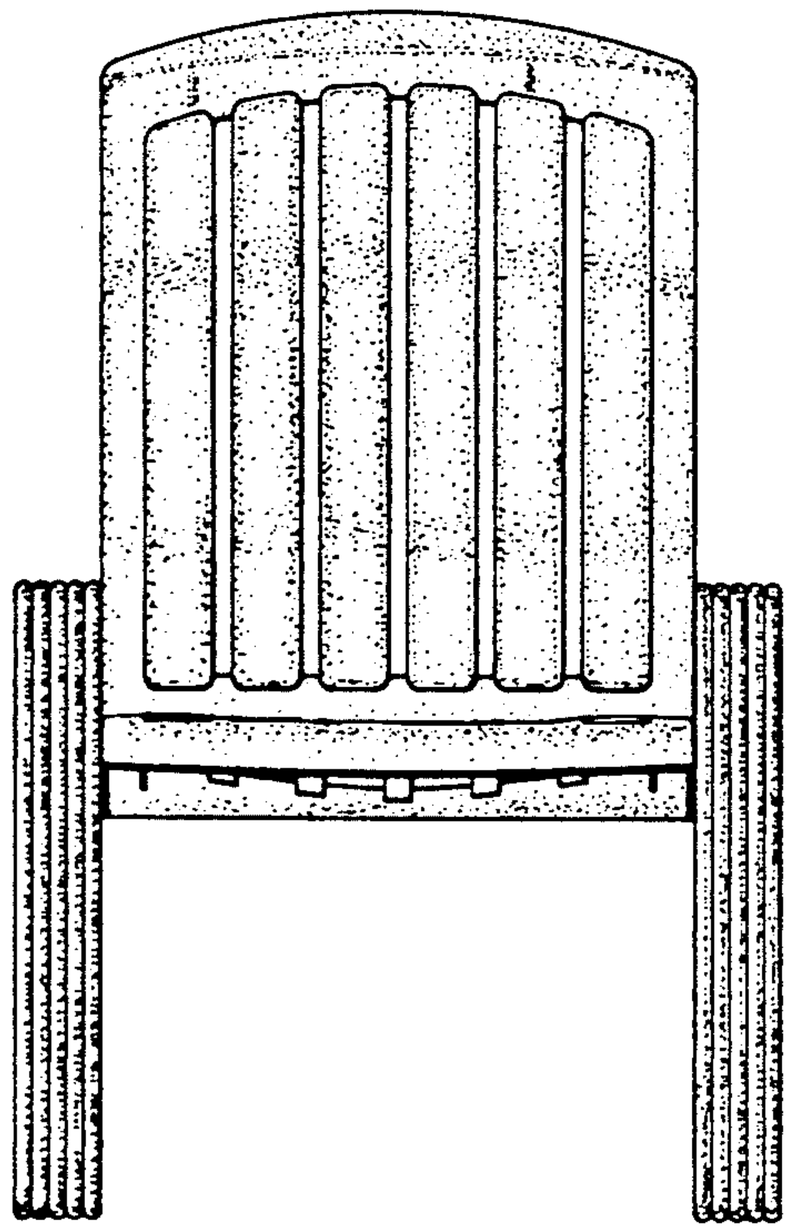

FIG. 3

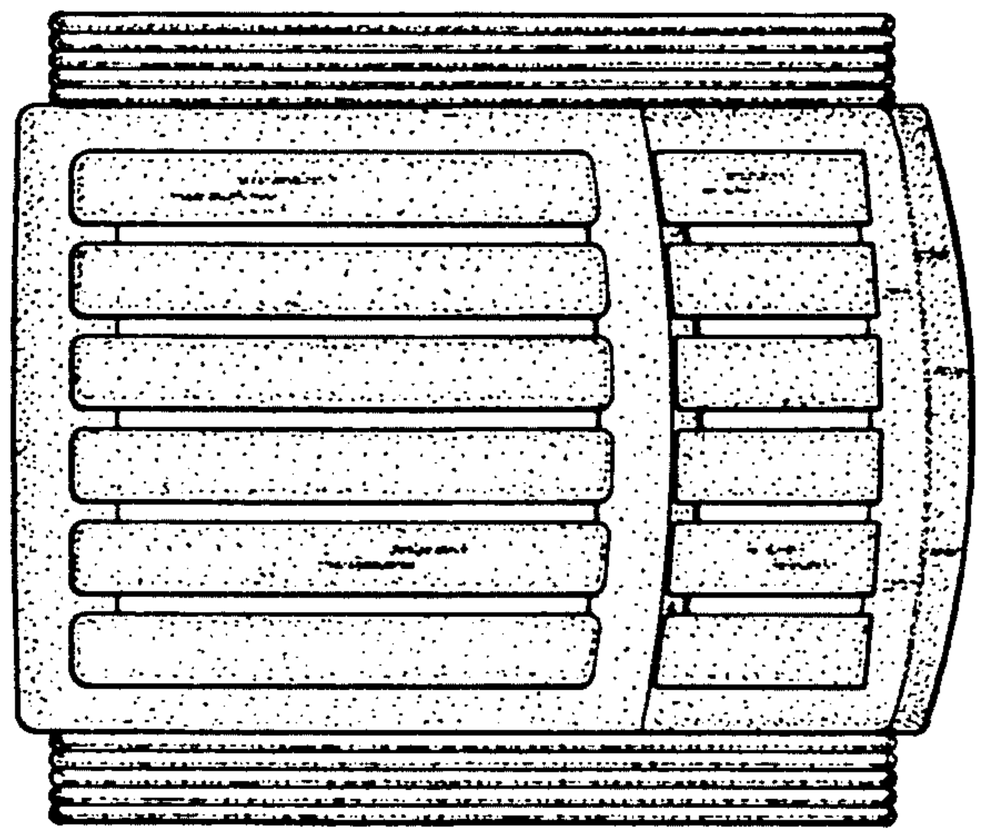

FIG. 4

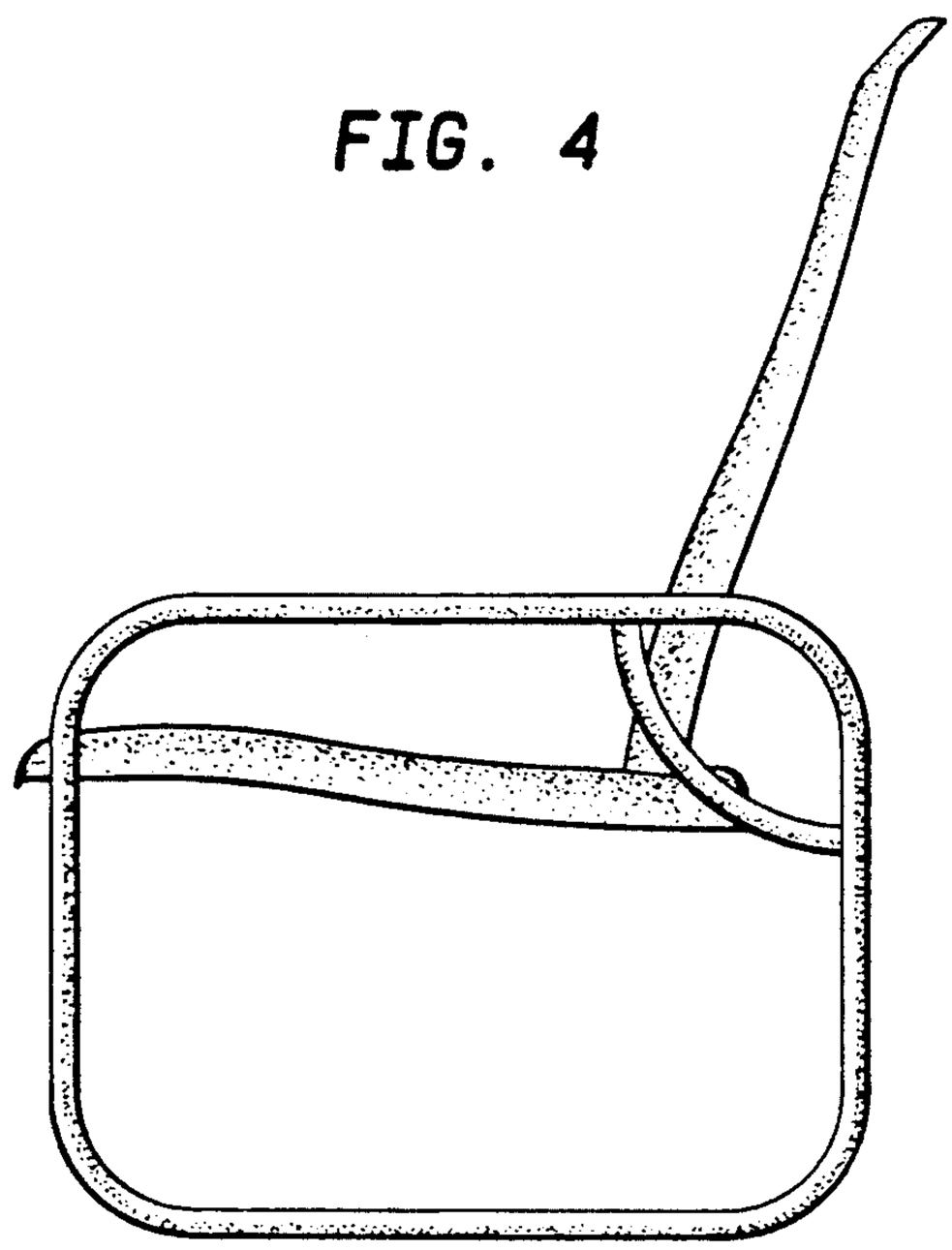

FIG. 5

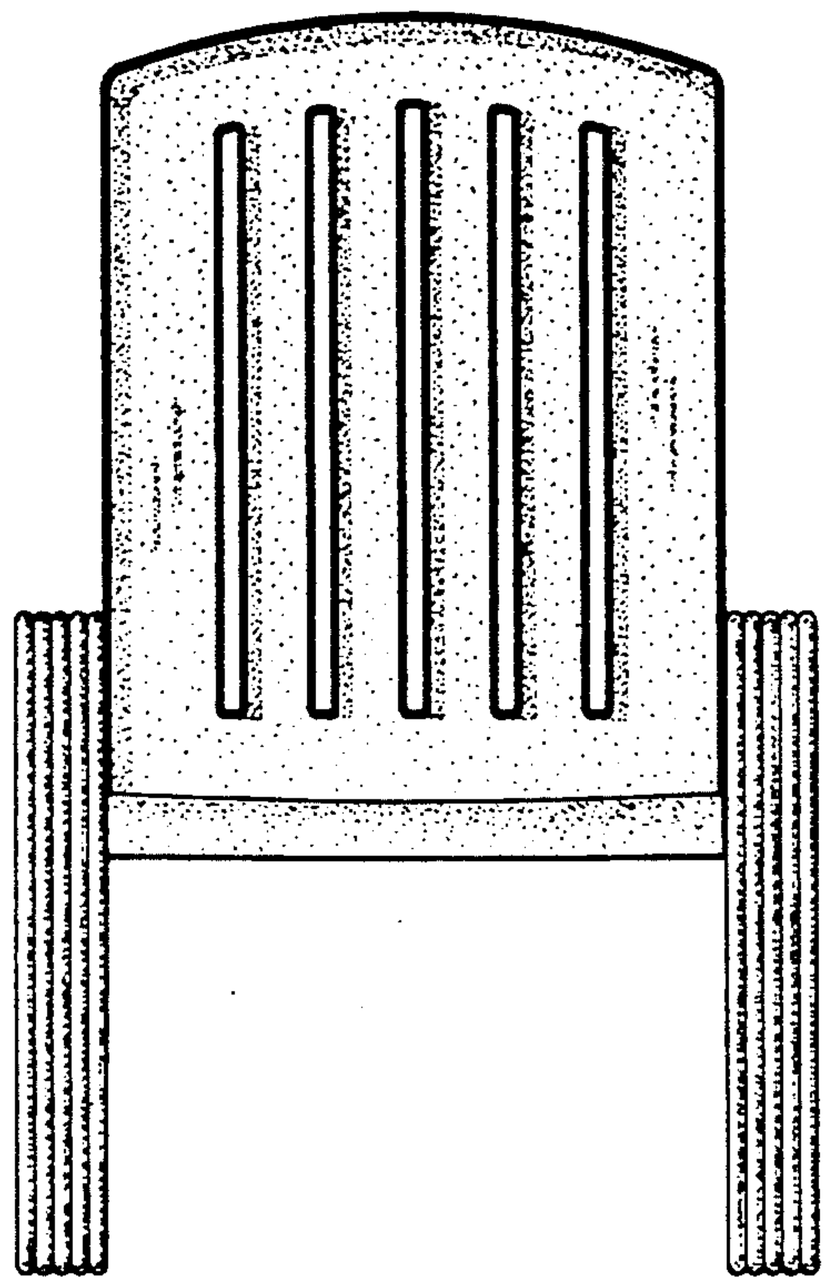

FIG. 6

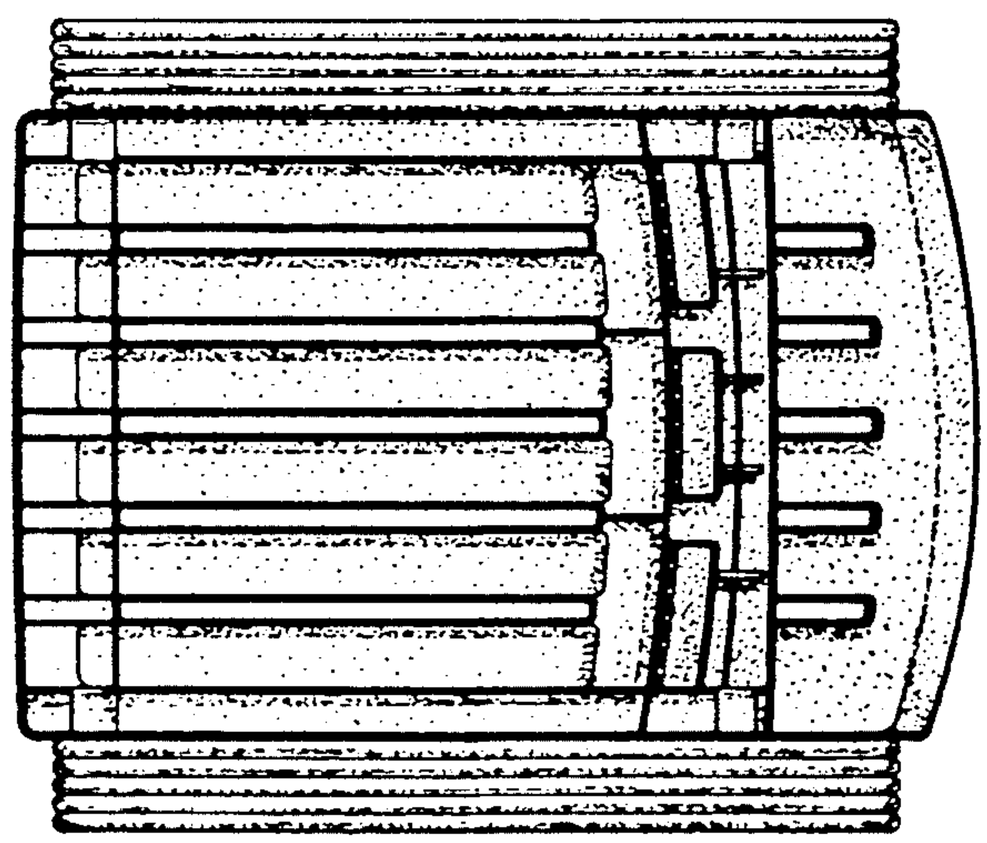

FIG. 7

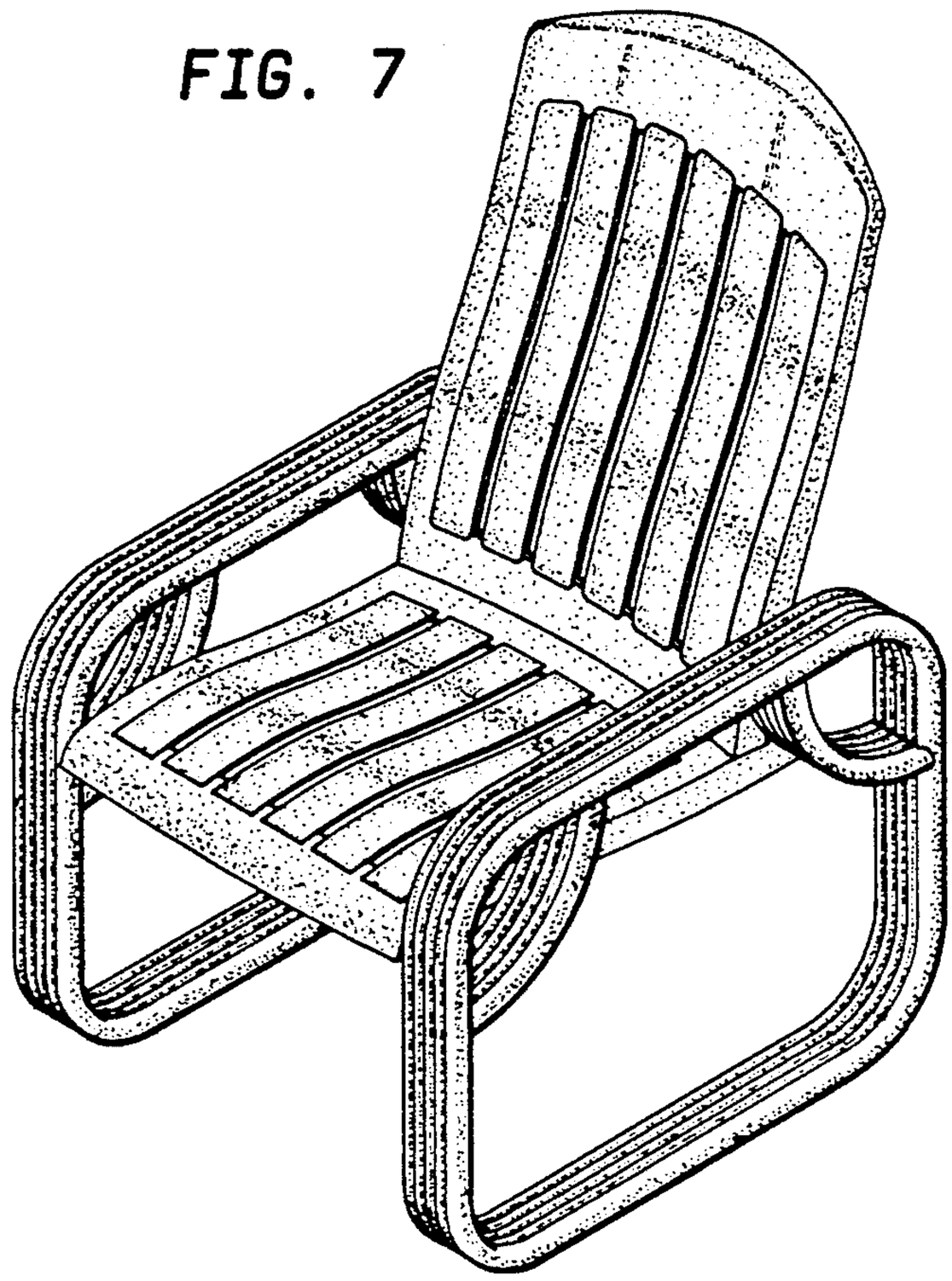

FIG. 8

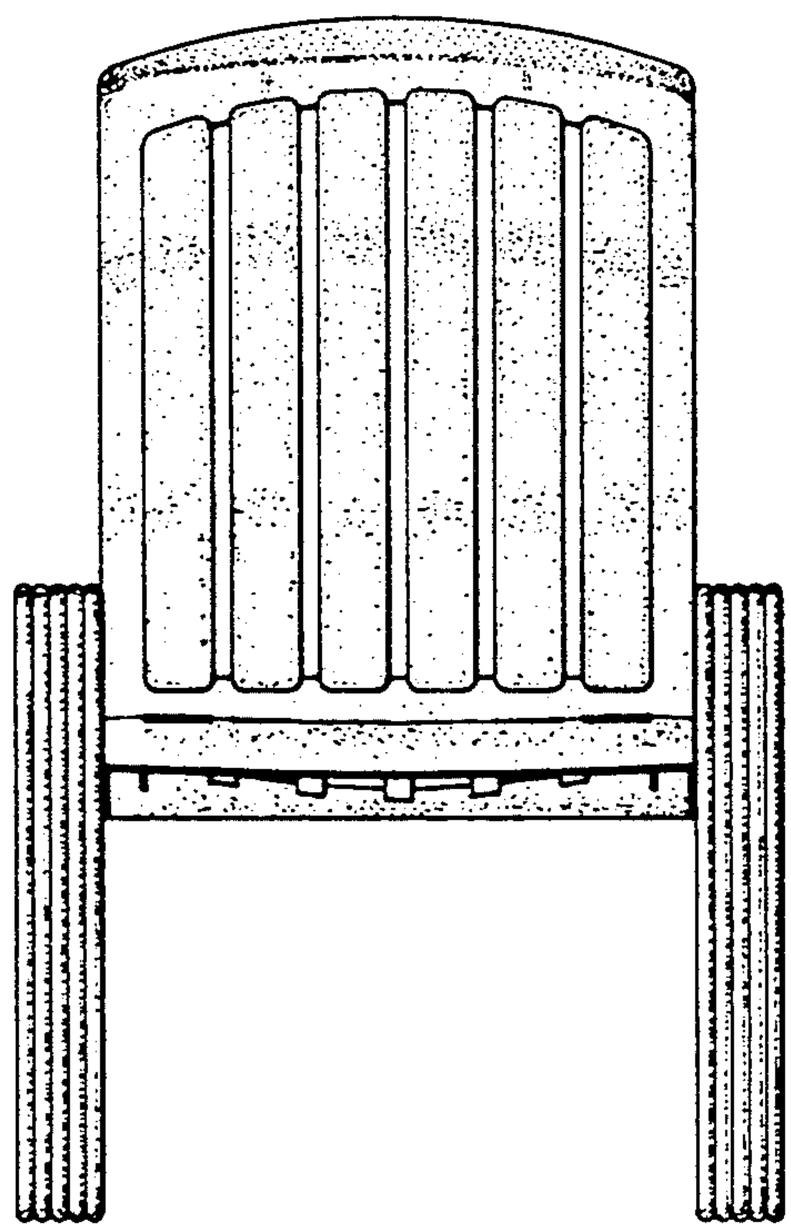

FIG. 9

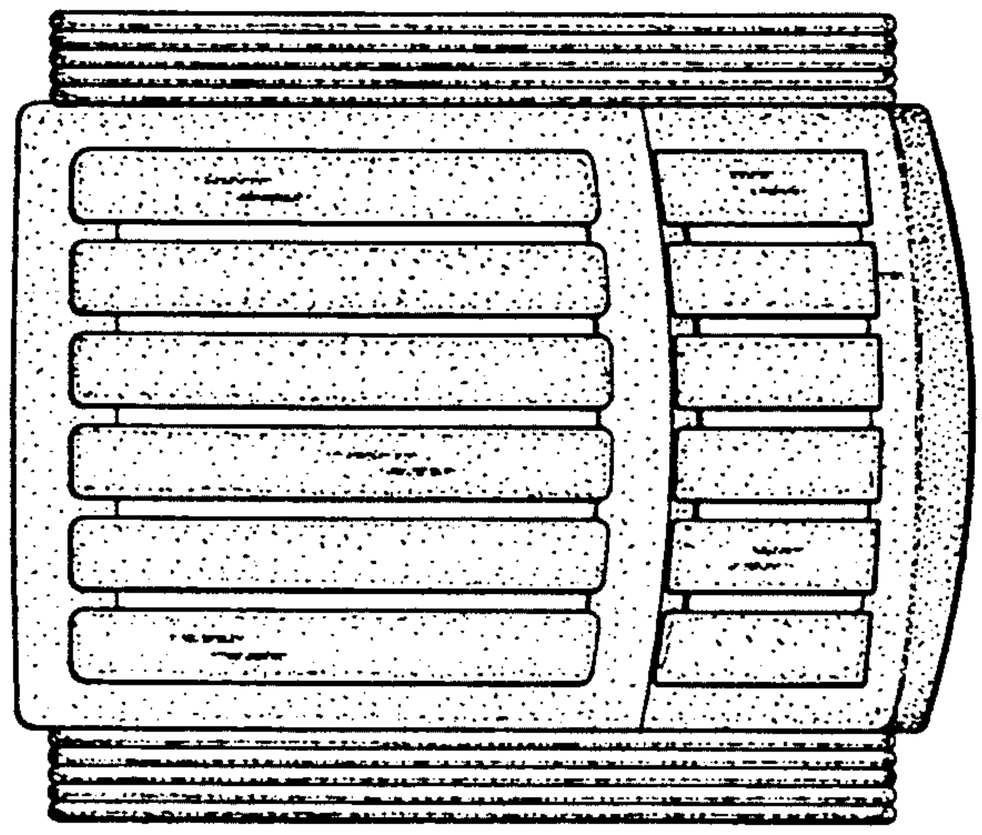

FIG. 10

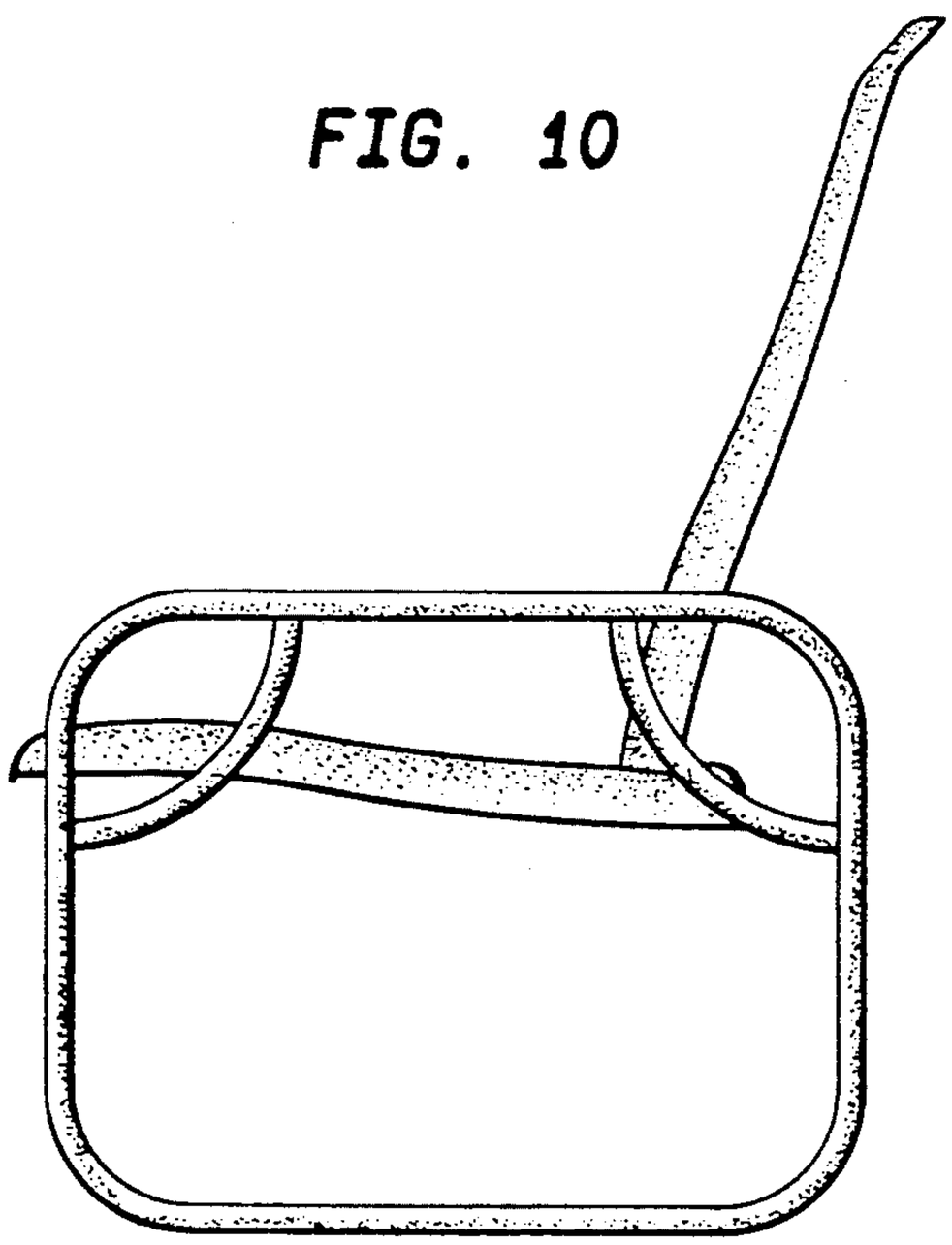

FIG. 11

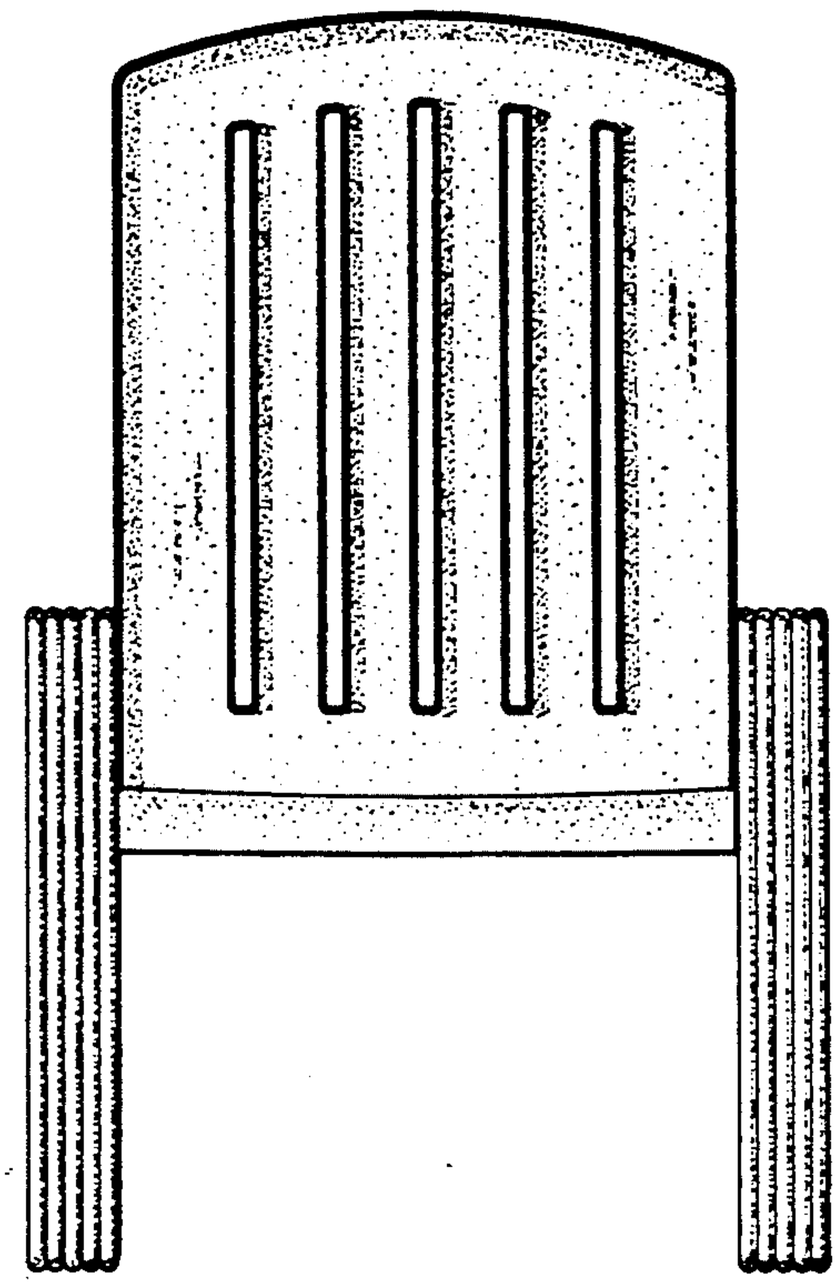

FIG. 12

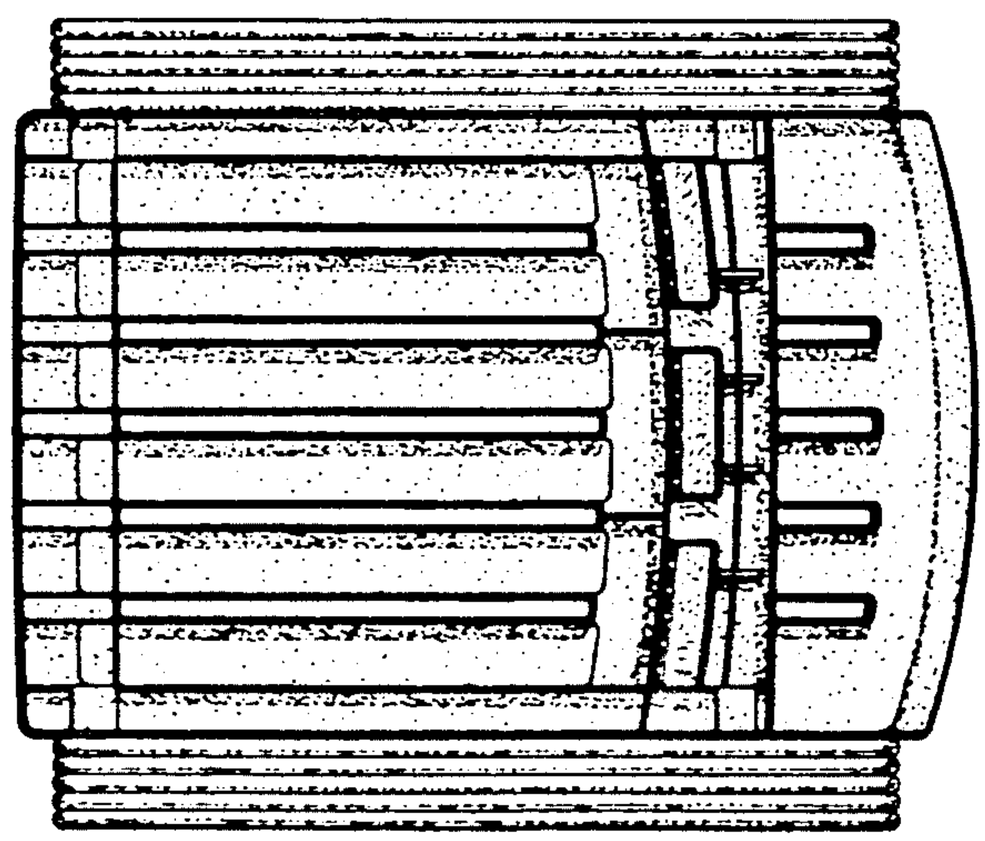

FIG. 13

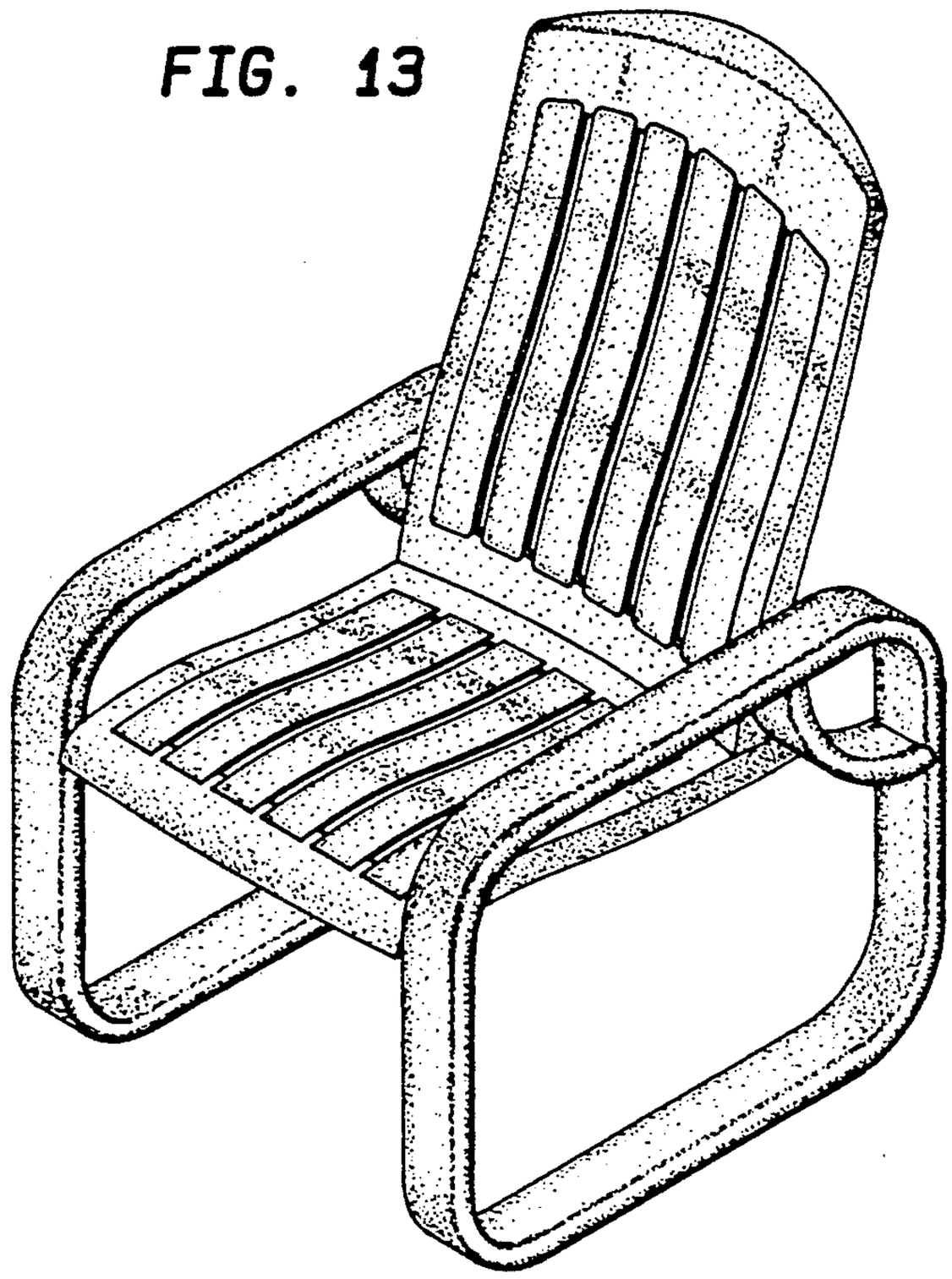

FIG. 14

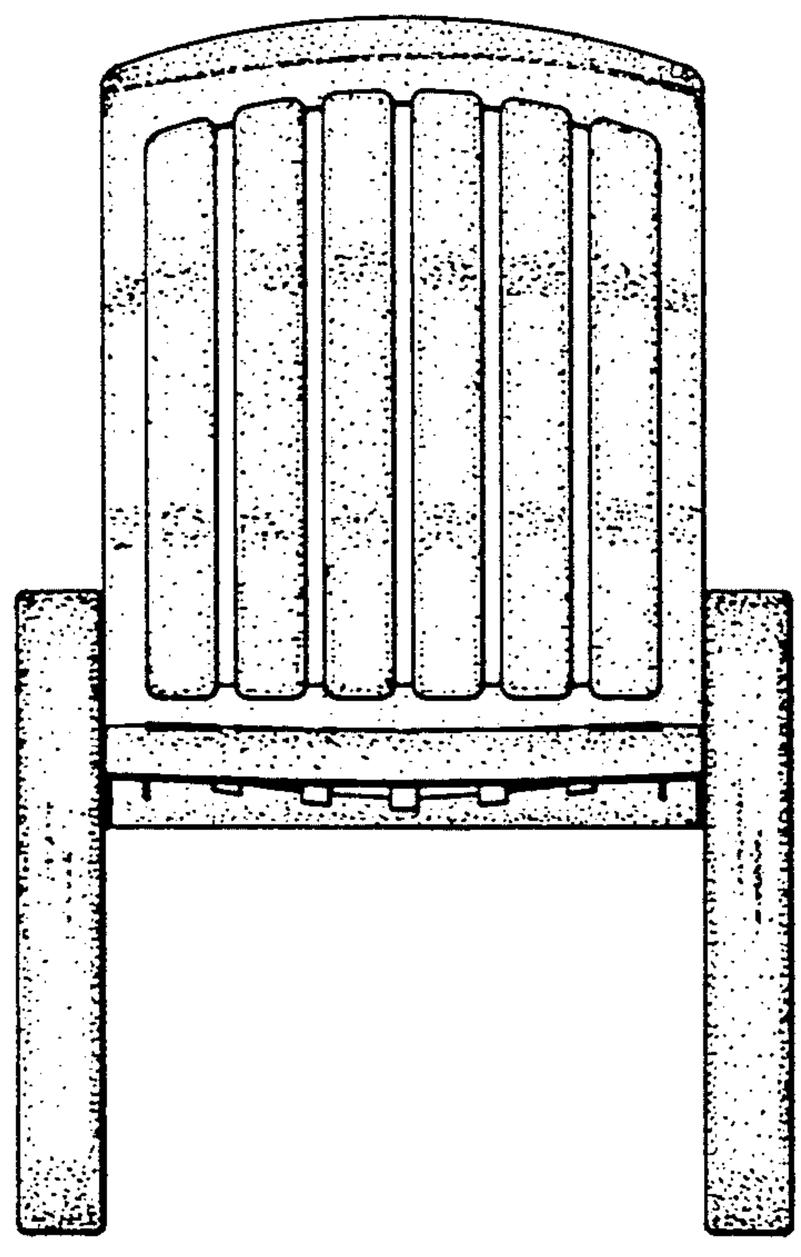

FIG. 15

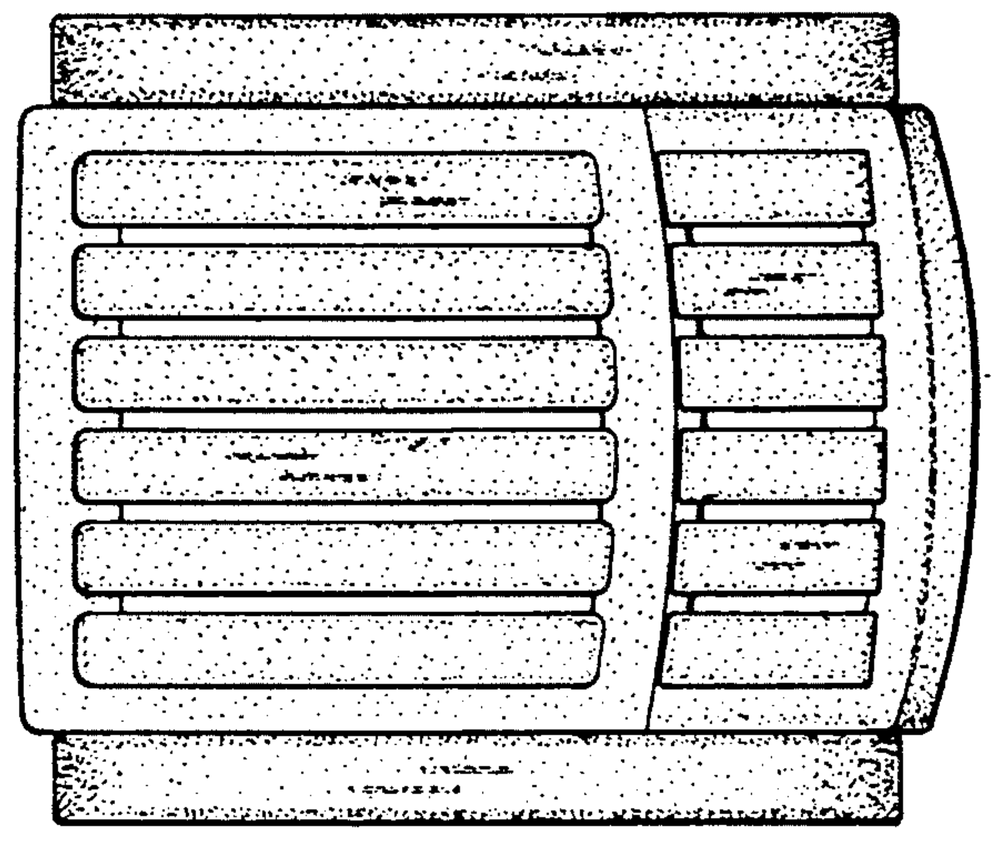

FIG. 16

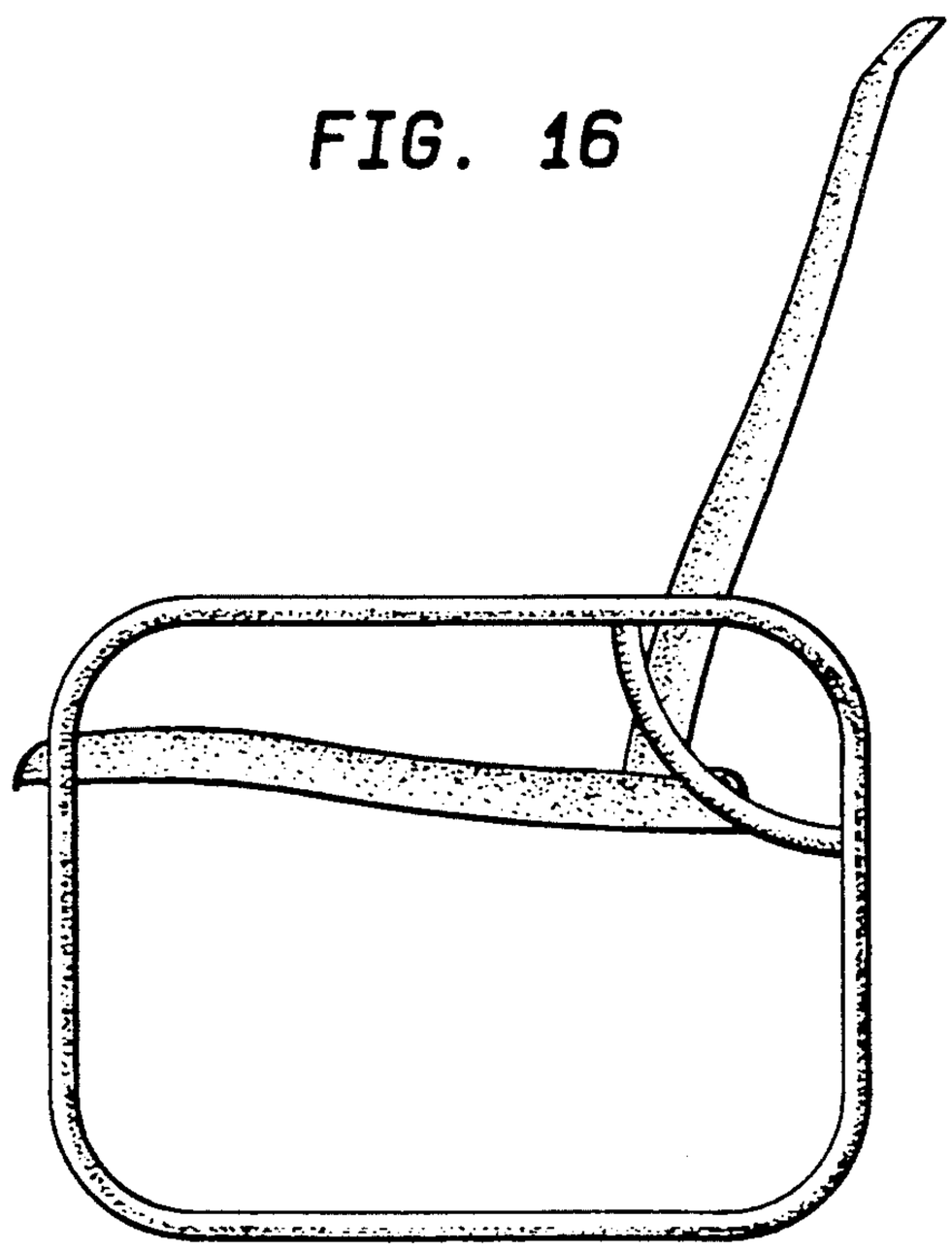

FIG. 17

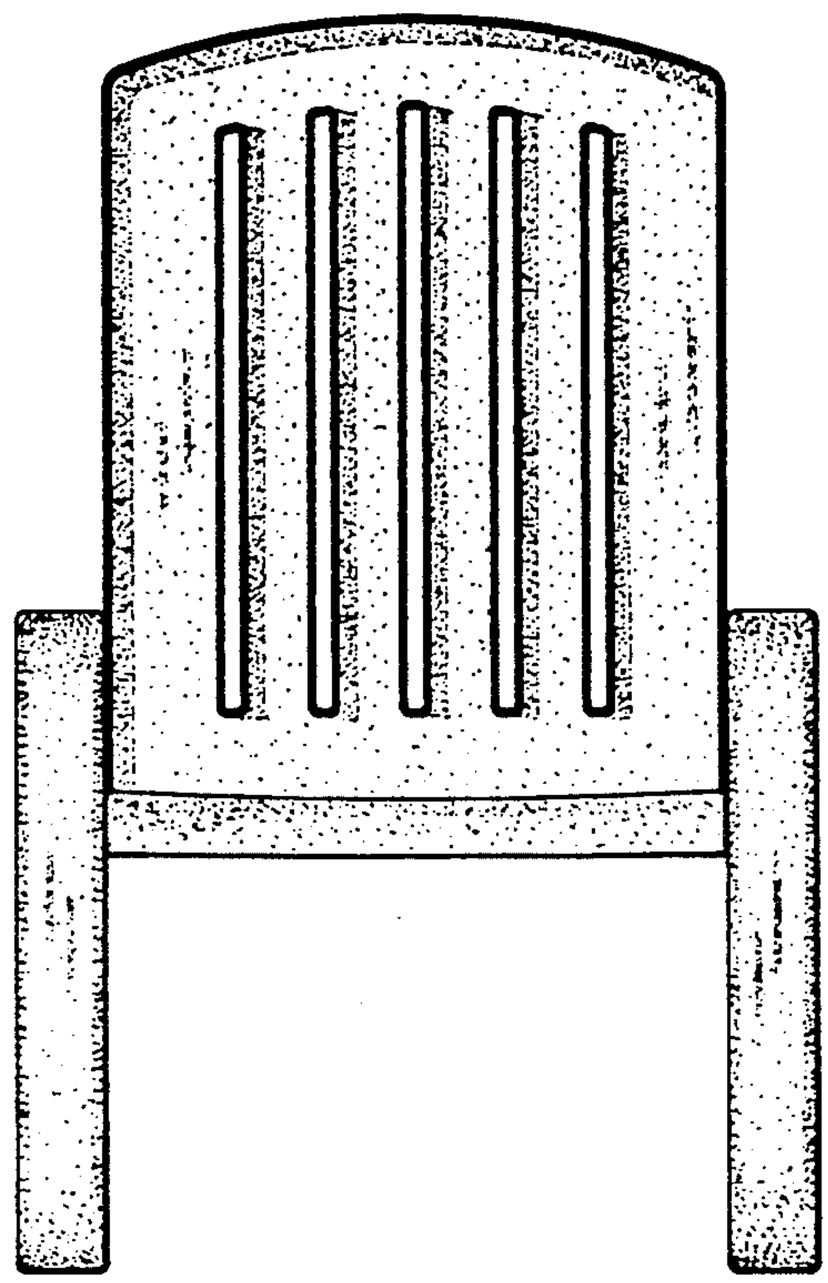

FIG. 18

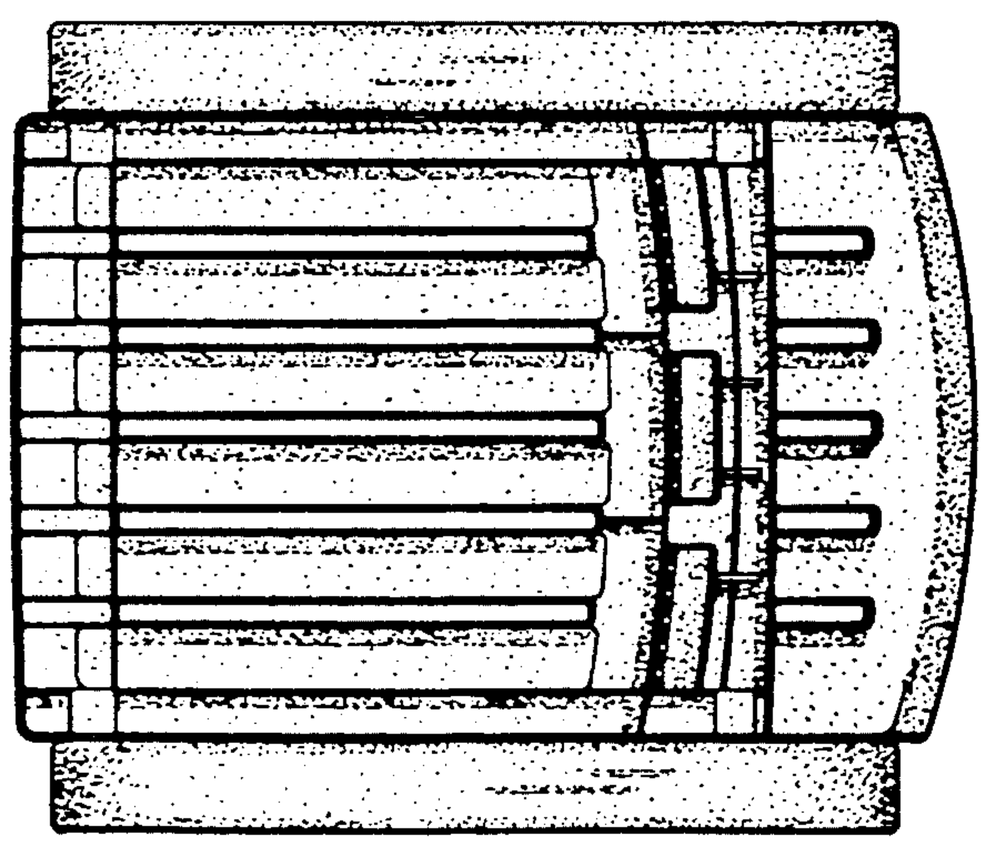

FIG. 19

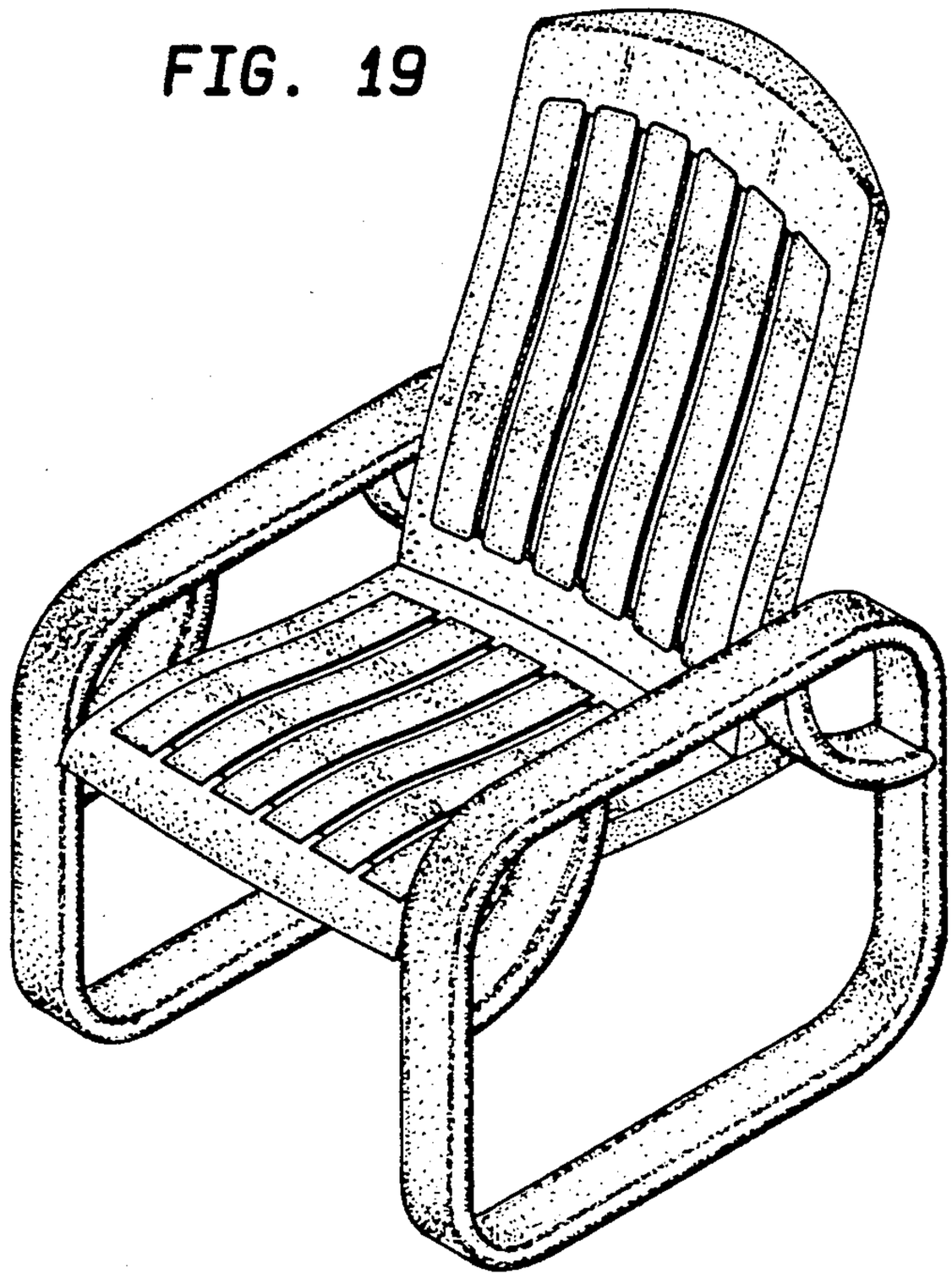

FIG. 20

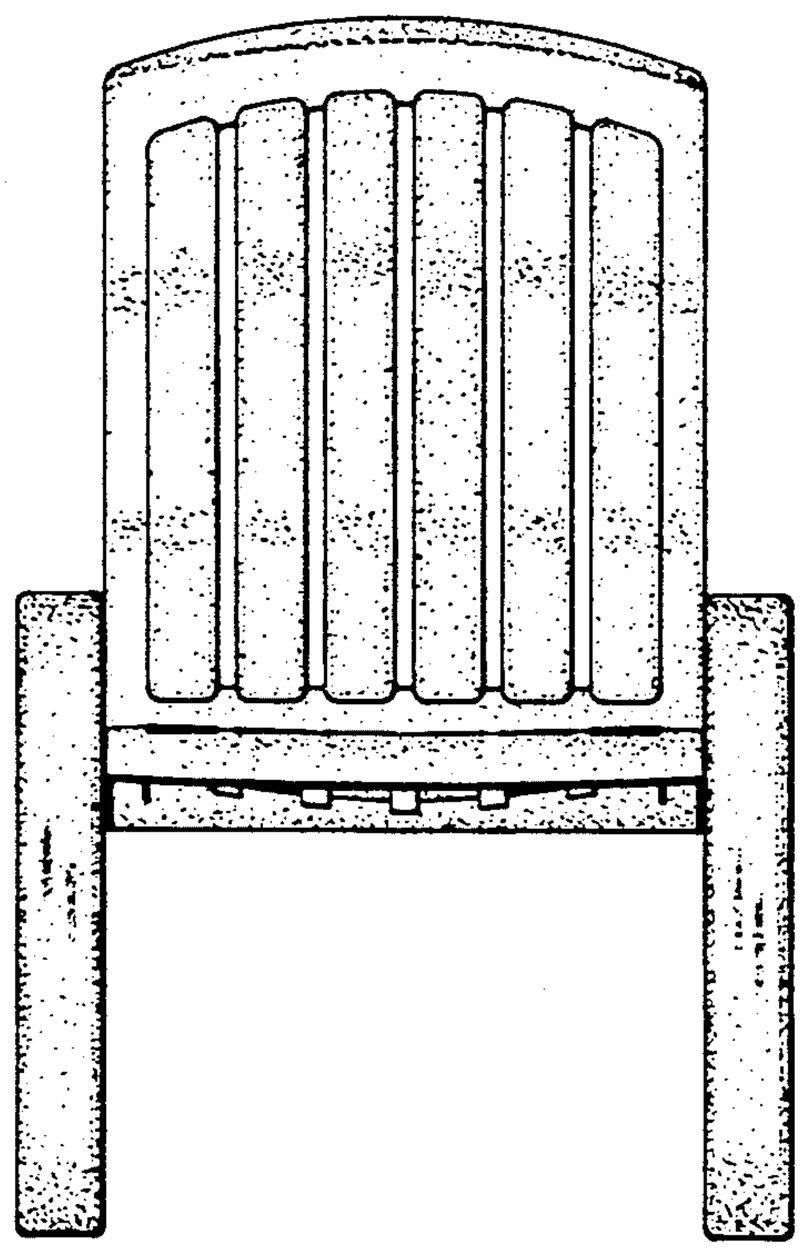

FIG. 21

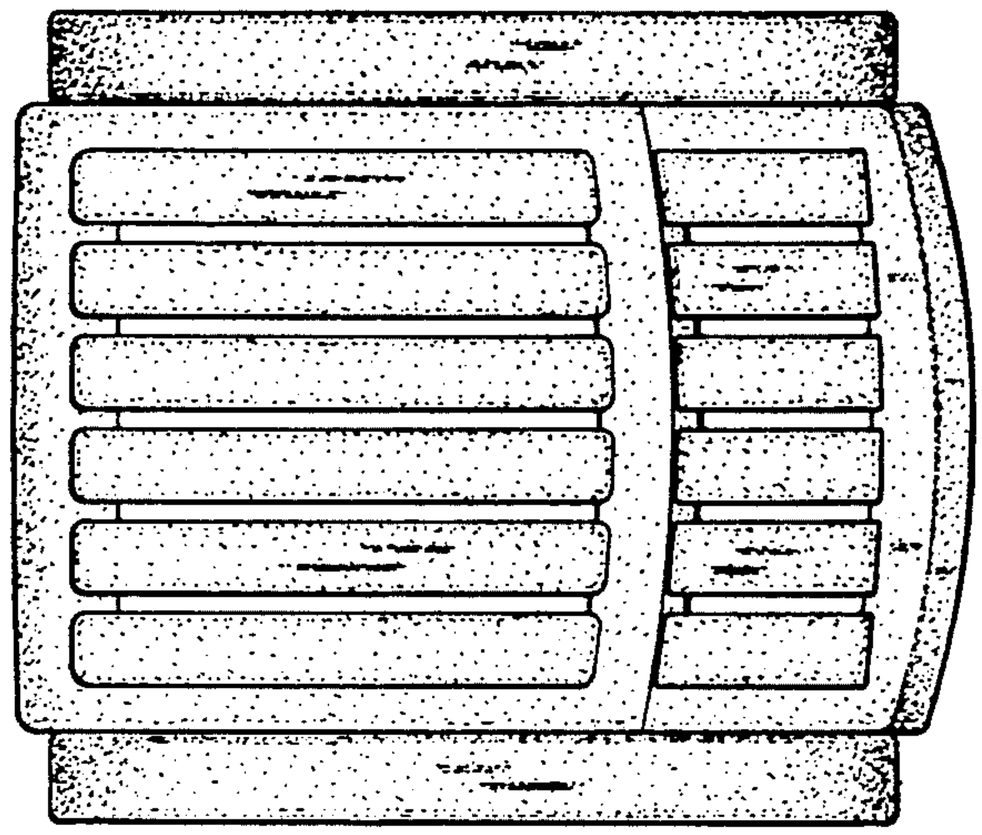

FIG. 22

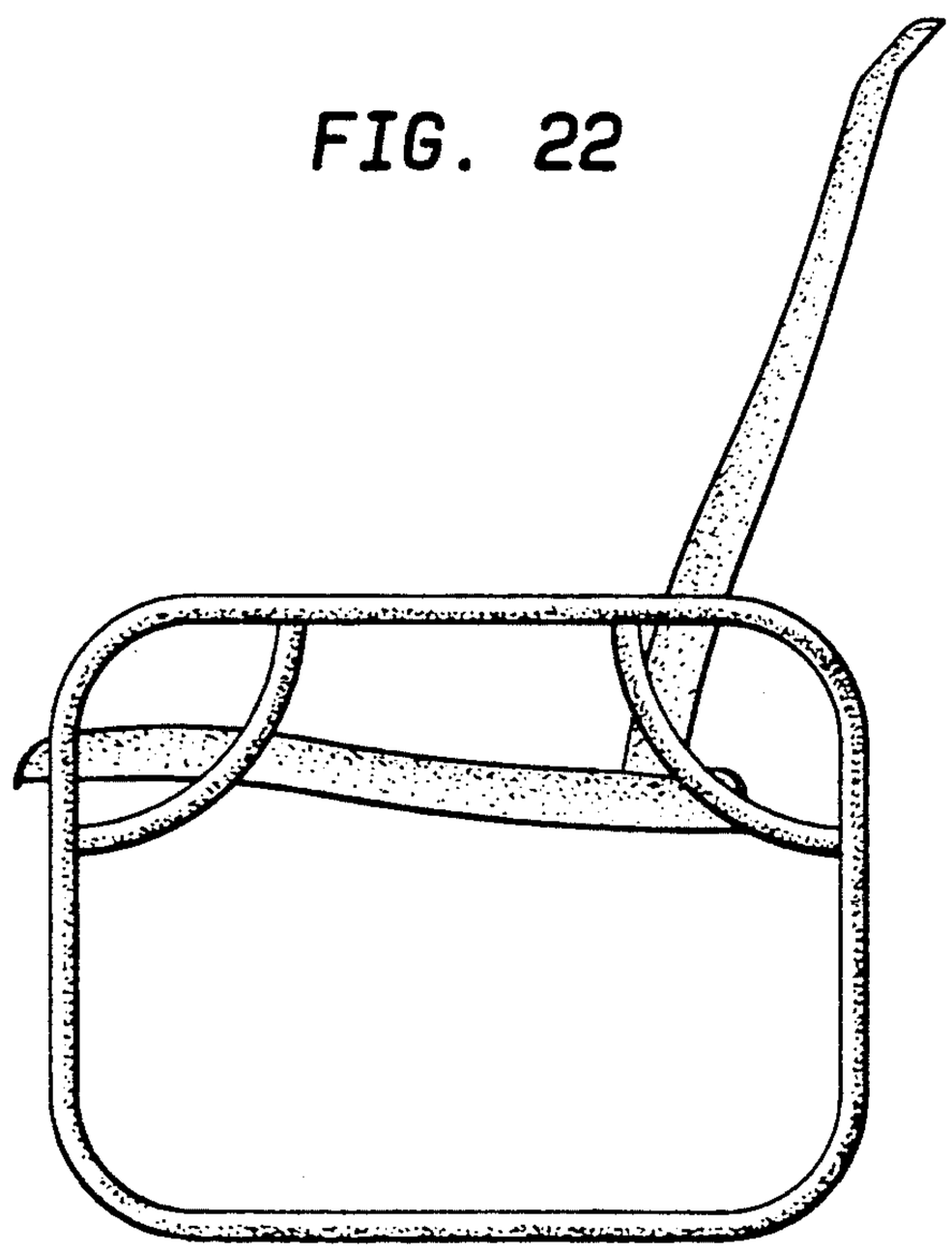

FIG. 23

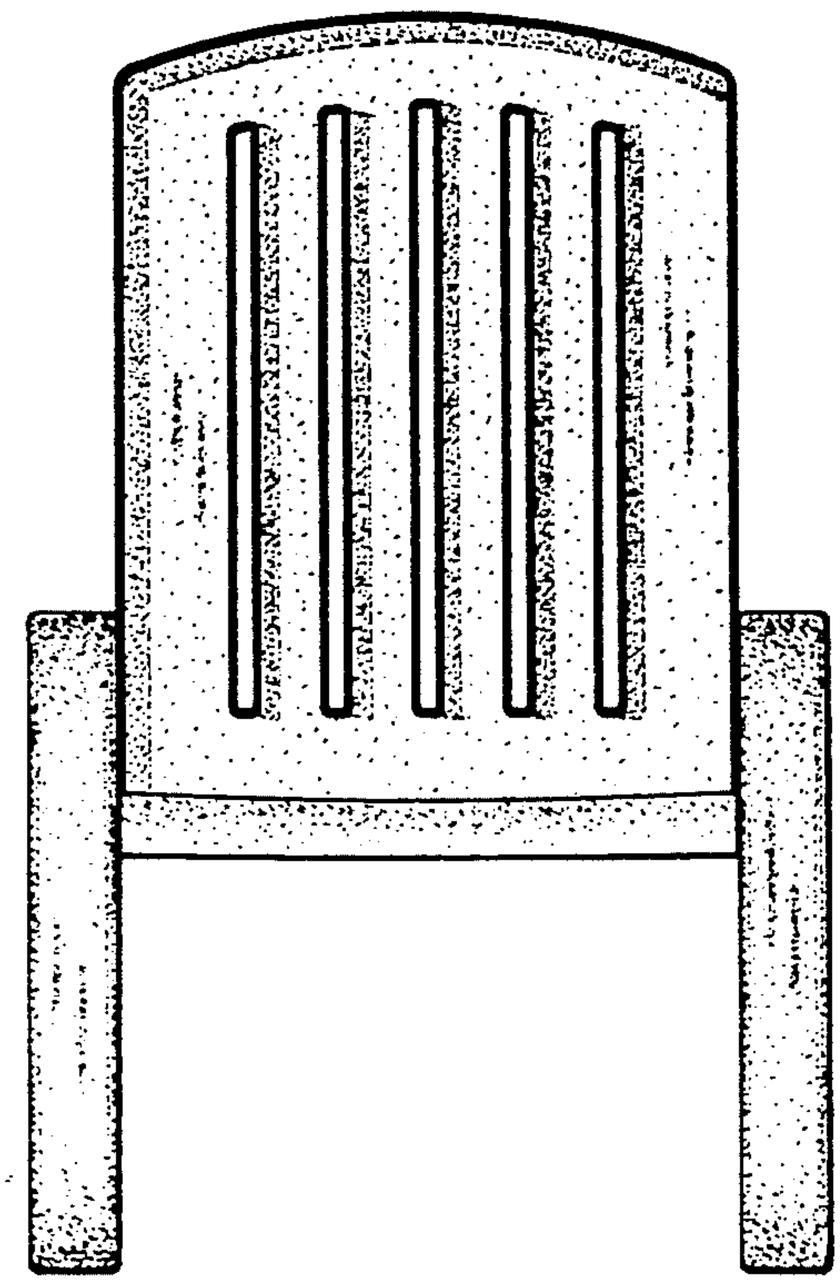

FIG. 24

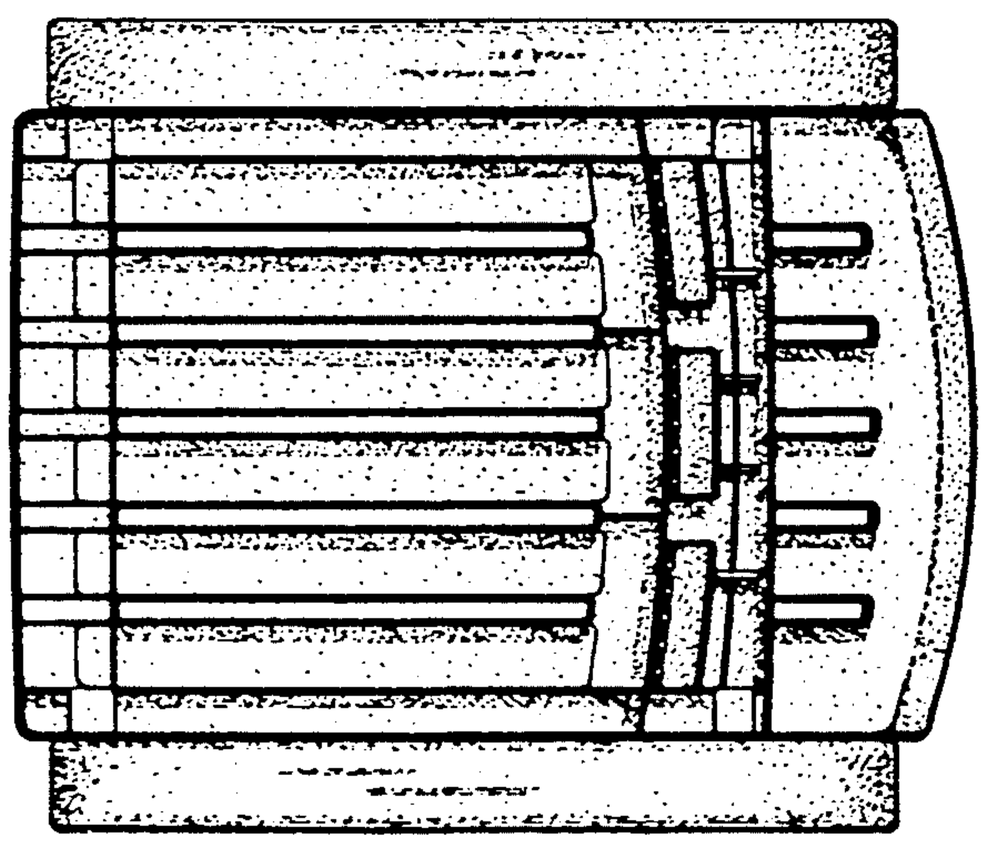

FIG. 25

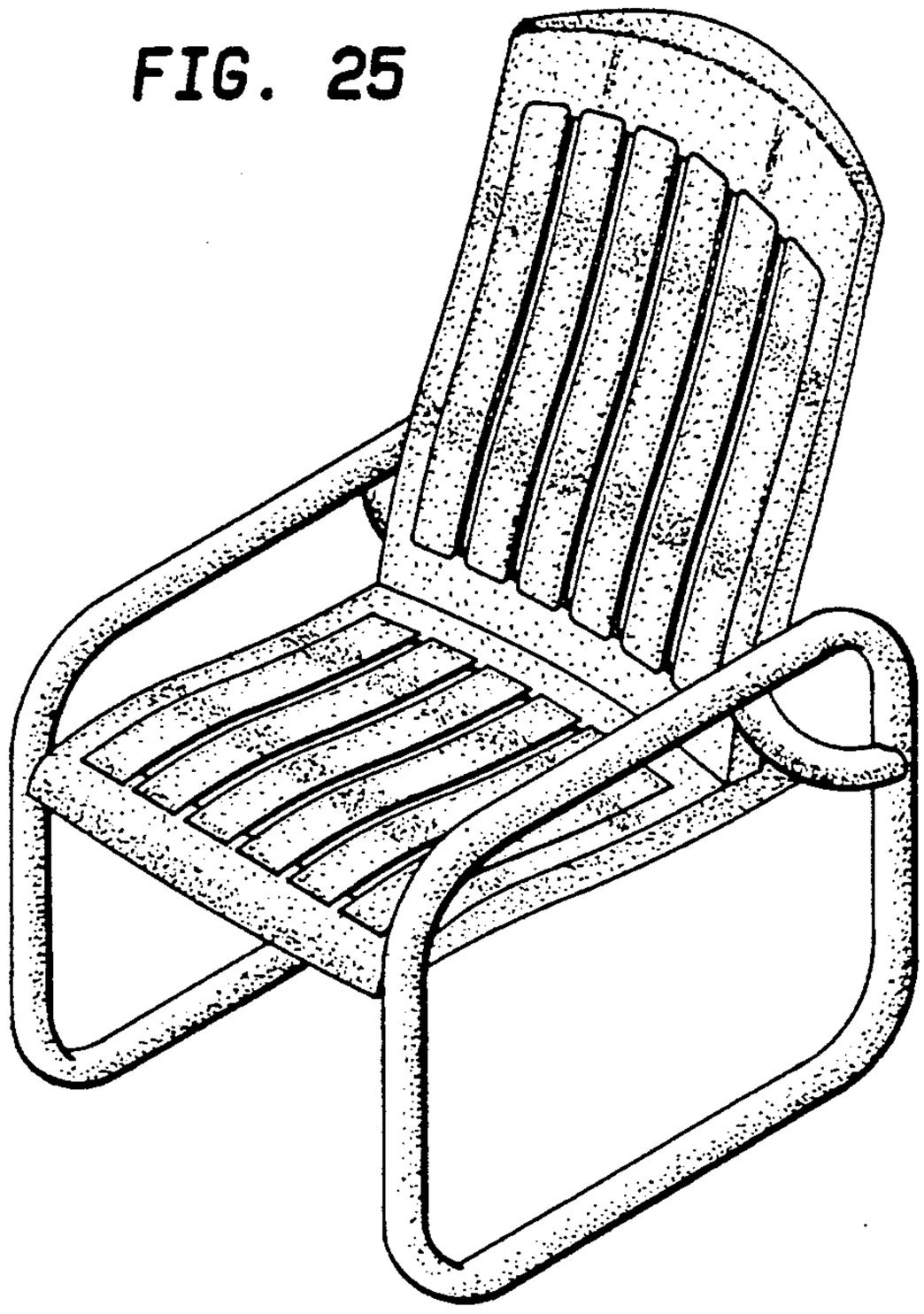

FIG. 26

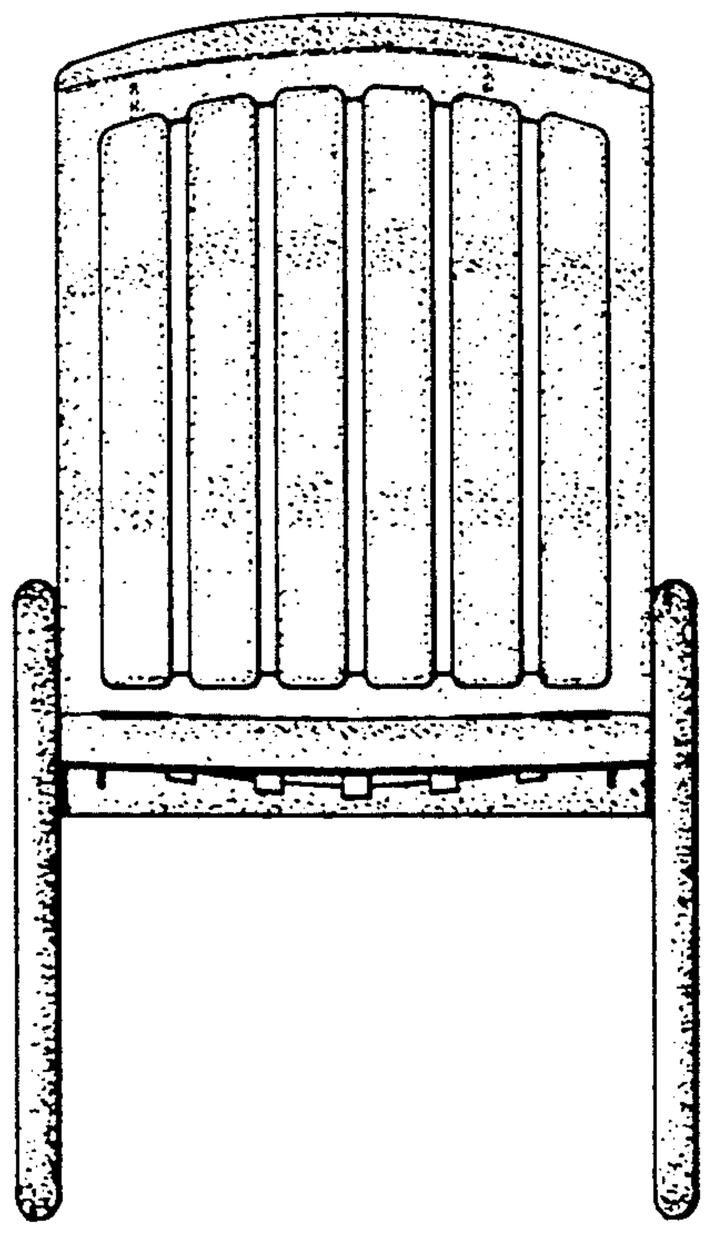

FIG. 27

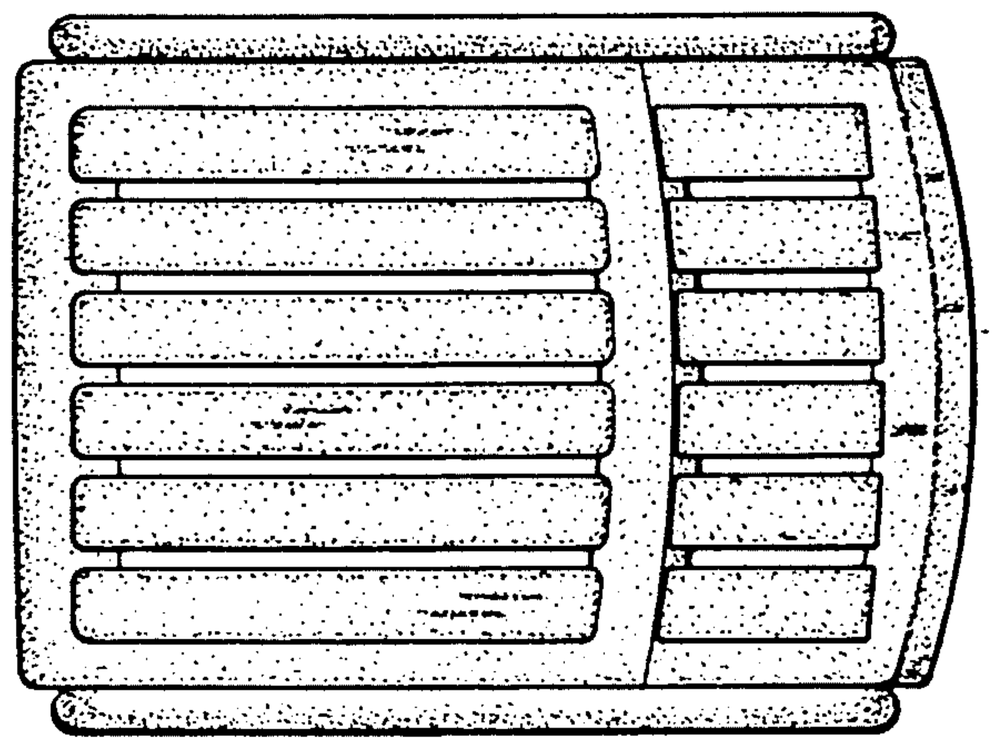

FIG. 28

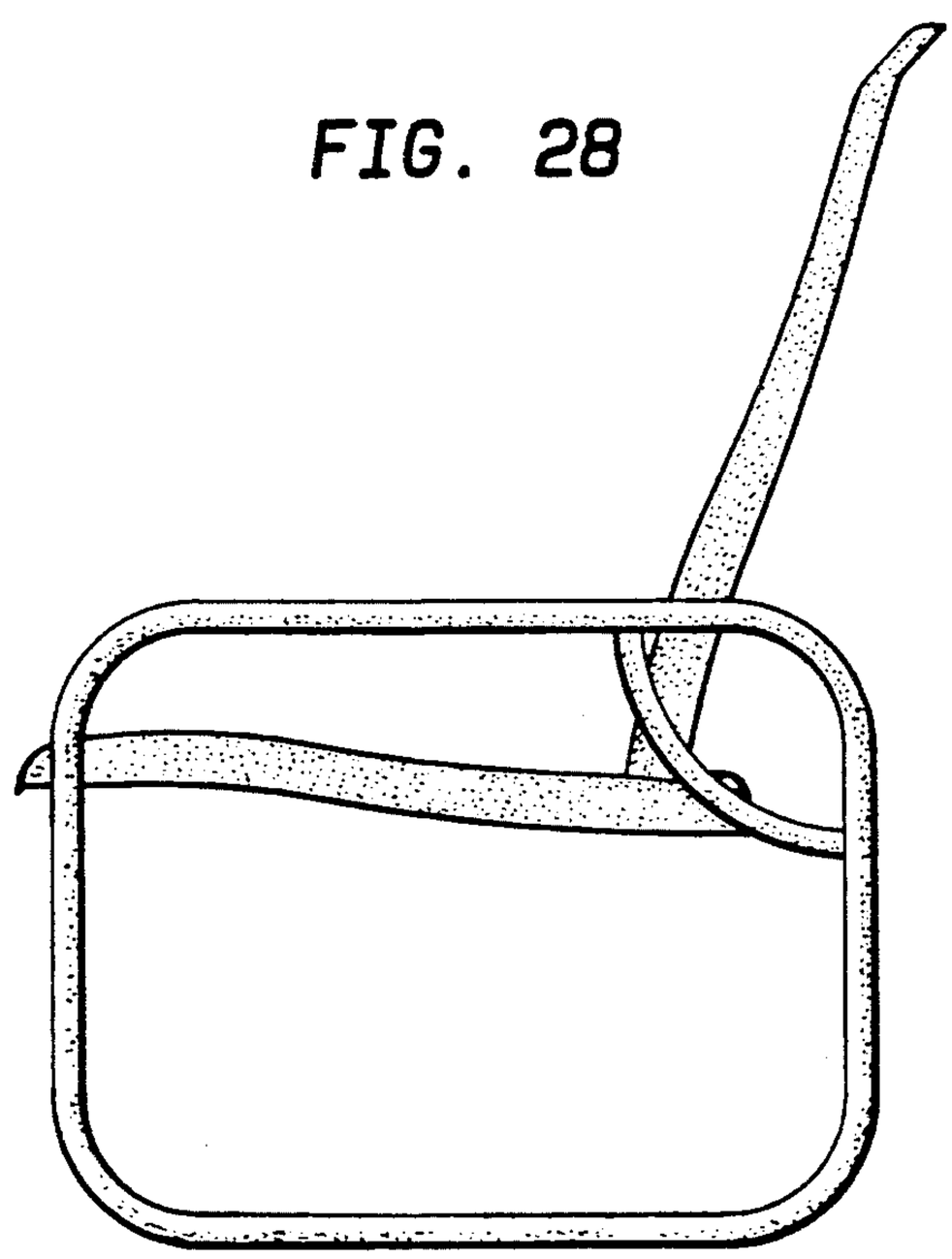

FIG. 29

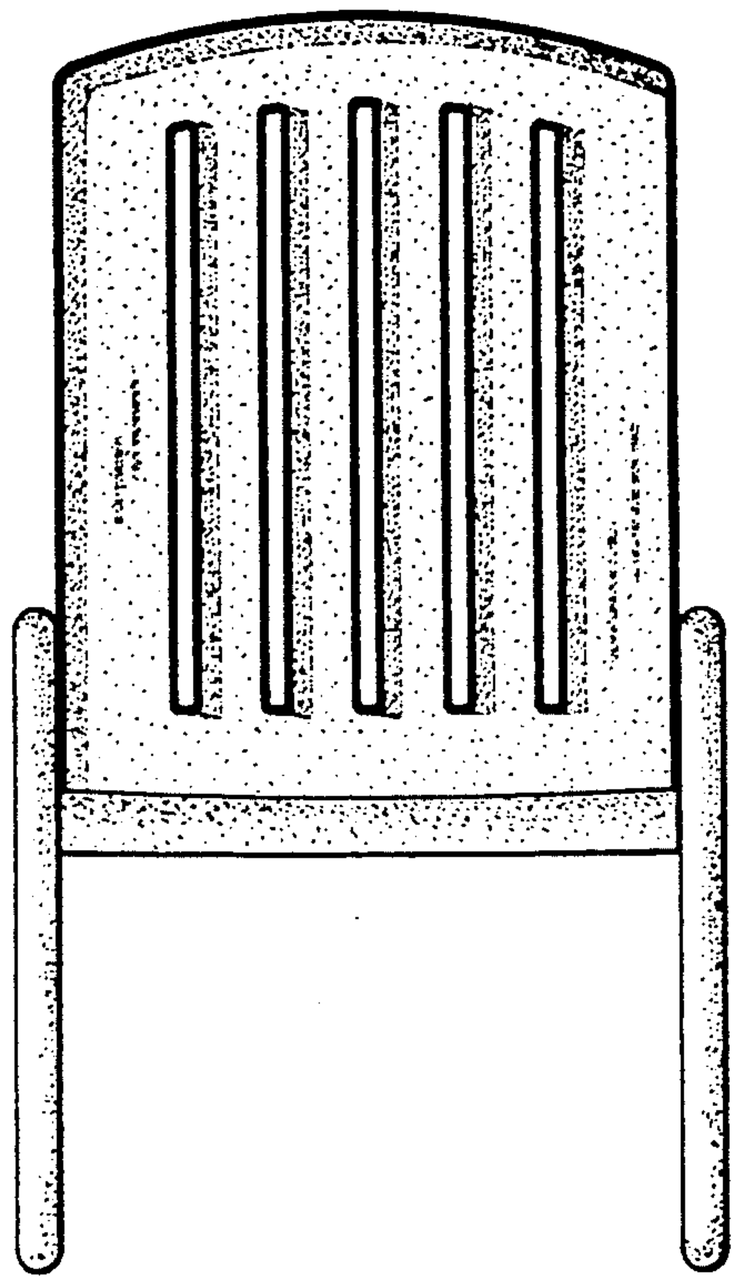

FIG. 30

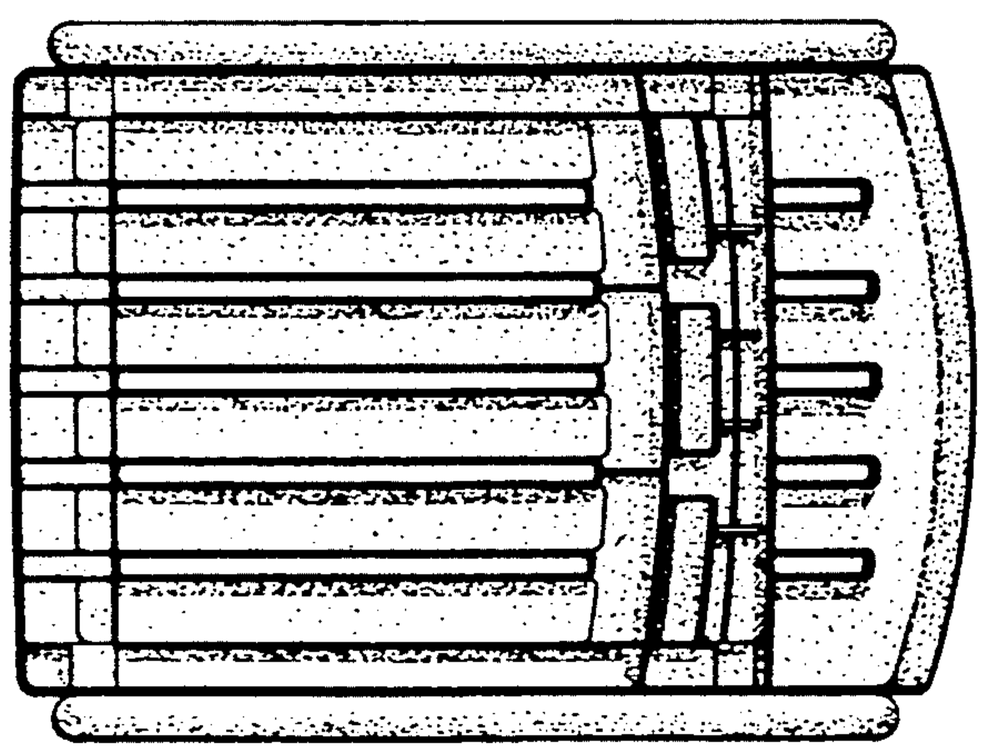

FIG. 31

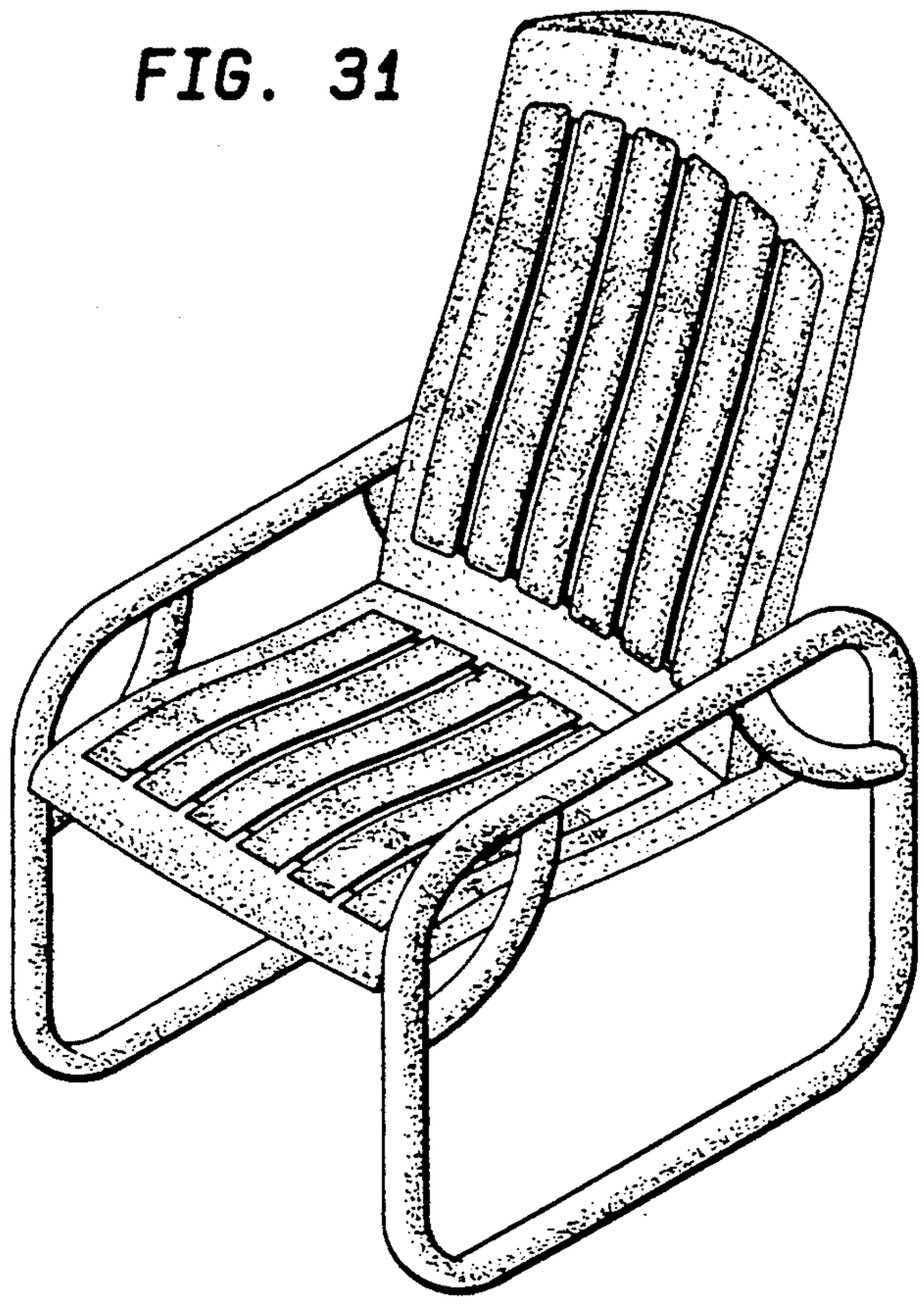

FIG. 32

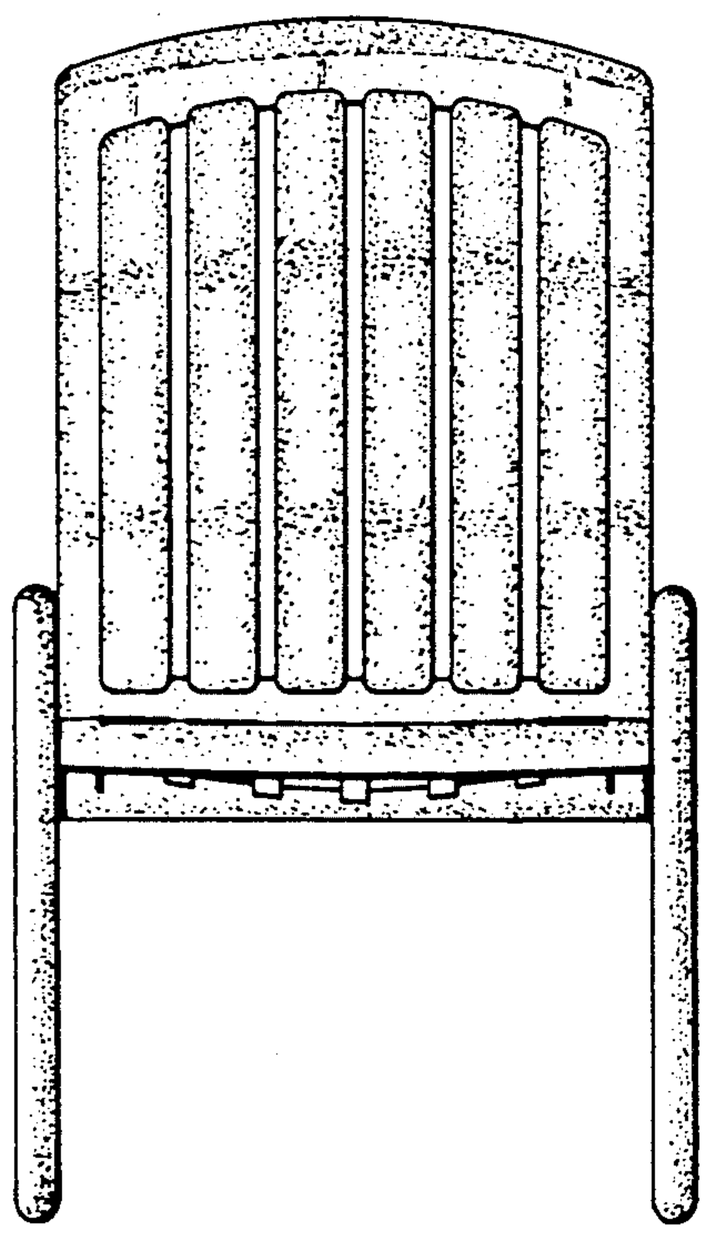

FIG. 33

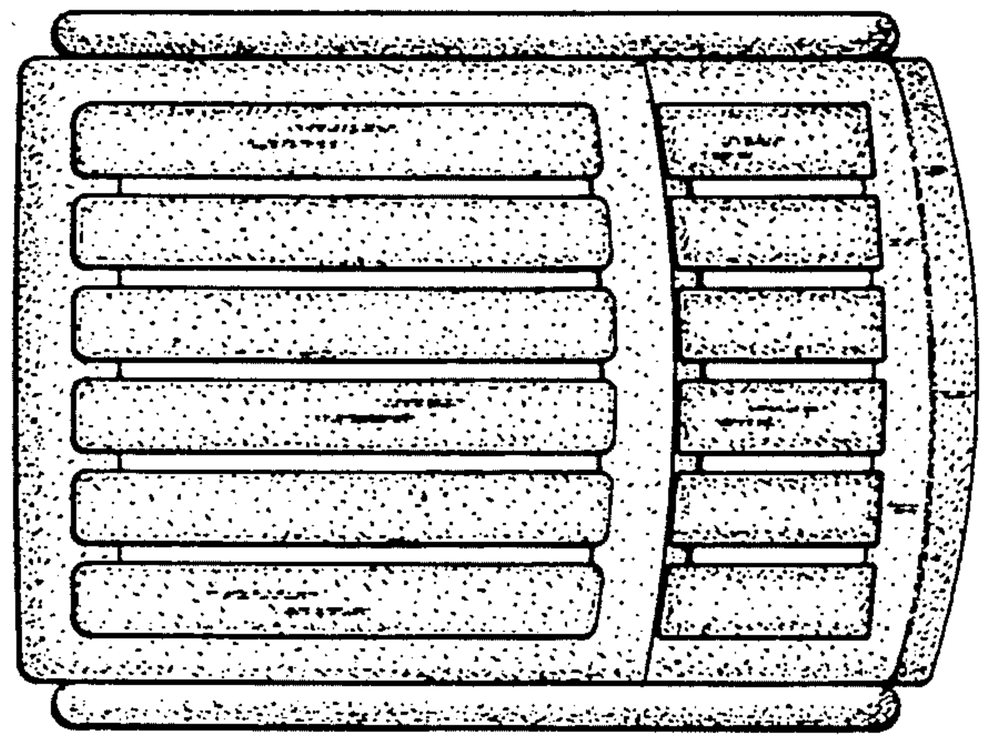

FIG. 34

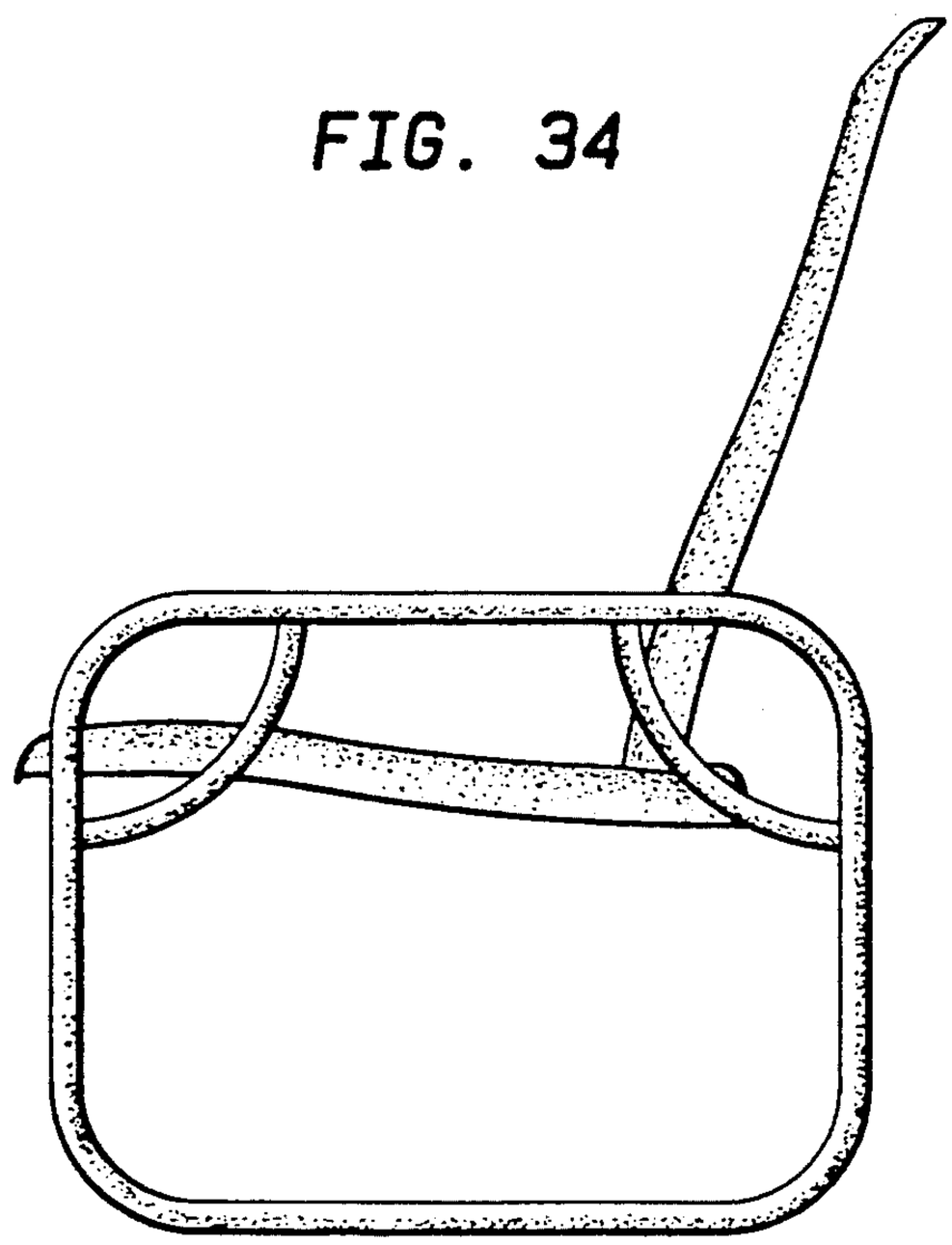

FIG. 35

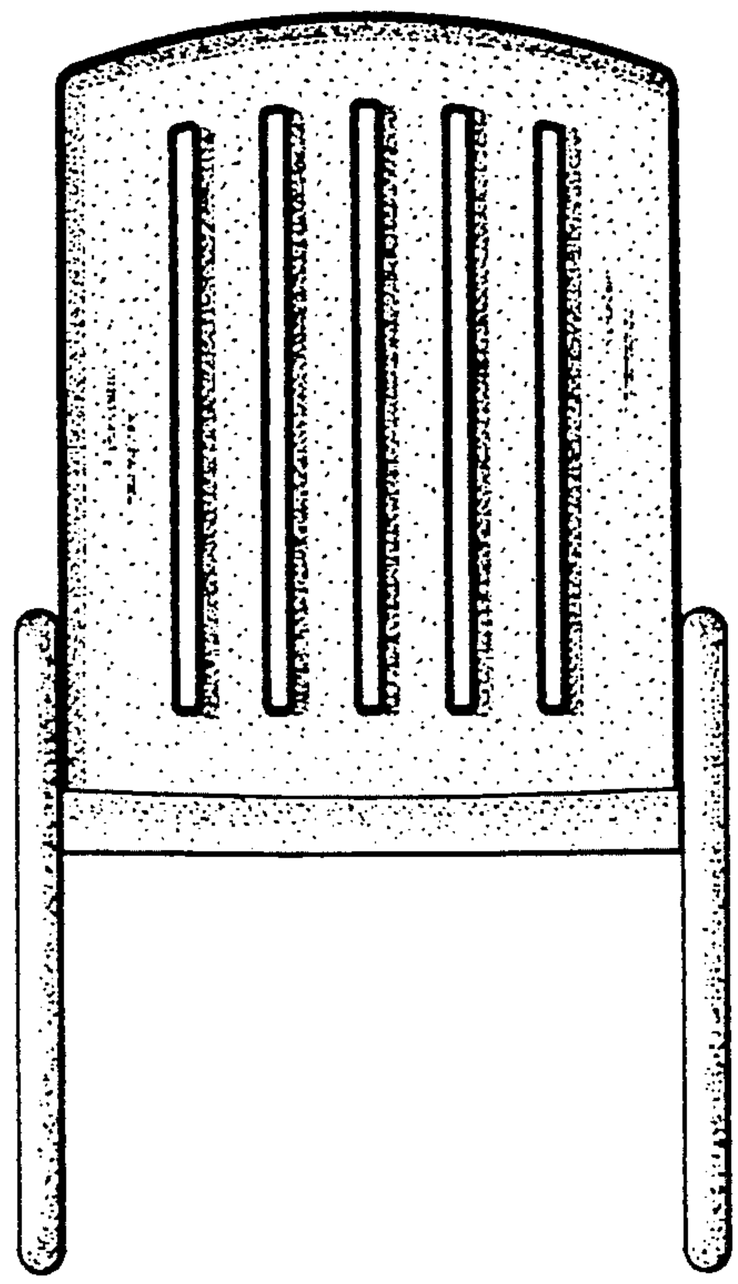
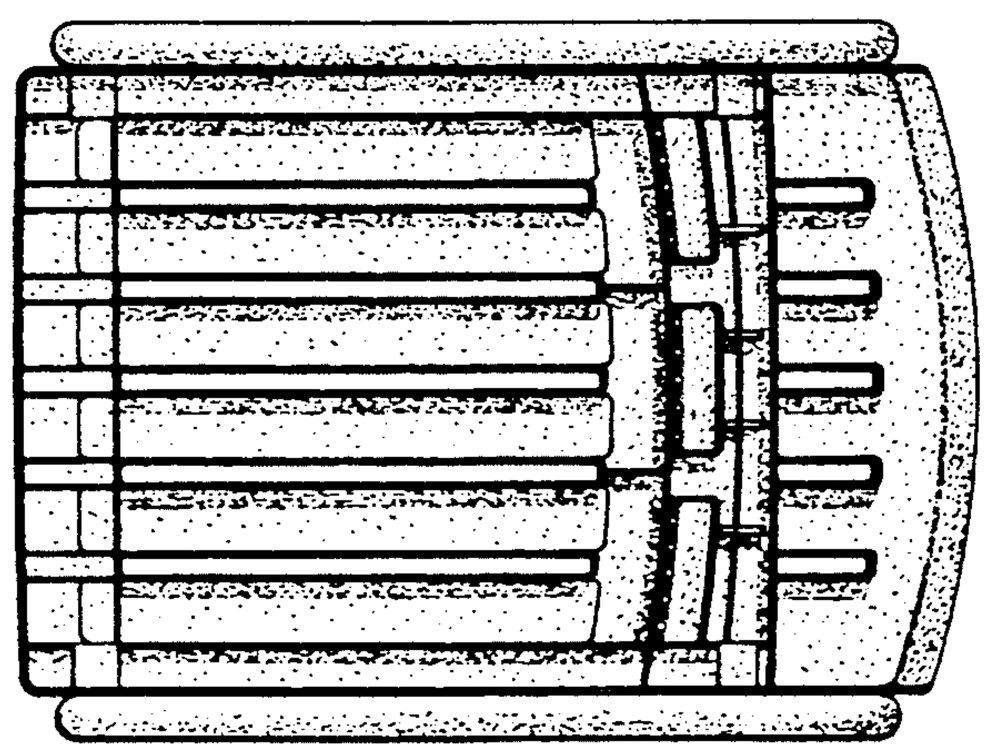
FIG. 36