US00D342721S

# United States Patent [19]

Itoh

[11] Patent Number: Des. 342,721

[45] Date of Patent: ** Dec. 28, 1993

[54] HEAT DISSIPATING DEVICE FOR A SEMICONDUCTOR PACKAGE

[75] Inventor: **Akira Itoh**, Osaka, Japan

[73] Assignee: **Itoh Research & Development Laboratory Co., Ltd.**, Osaka, Japan

[**] Term: **14 Years**

[21] Appl. No.: **933,503**

[22] Filed: **Aug. 21, 1992**

[30] **Foreign Application Priority Data**

Mar. 4, 1992 [JP] Japan ..... 4-6202

[52] **U.S. Cl.** ..... **D13/179**

[58] **Field of Search** ..... 437/902; 165/80.2, 80.3, 165/104.33; 257/713, 720; 361/383, 386; 174/52.1, 15.2, 16.3; D13/179, 182

[56] **References Cited**

U.S. PATENT DOCUMENTS

| | | | |
|---|---|---|---|
| D. 276,719 | 12/1984 | Sugimoto et al. | D13/179 X |
| 3,241,605 | 3/1966 | Tabor | D13/179 X |
| 3,406,753 | 10/1968 | Habdas | 165/80.2 X |
| 3,572,428 | 3/1971 | Monaco | 361/383 X |
| 3,589,046 | 5/1971 | Jordan | 174/52.1 |
| 3,884,293 | 5/1975 | Pessolano et al. | 361/386 X |
| 4,292,647 | 9/1981 | Lee | 165/80.3 X |
| 4,644,385 | 2/1987 | Nakanishi et al. | 257/713 |
| 4,716,494 | 12/1987 | Bright et al. | 174/16.3 X |
| 5,087,888 | 2/1992 | Mountz et al. | 361/383 X |
| 5,155,579 | 10/1992 | Yeung | 174/16.3 X |

FOREIGN PATENT DOCUMENTS

| | | | |
|---|---|---|---|
| 0054597 | 6/1982 | European Pat. Off. | 361/386 |

OTHER PUBLICATIONS

Air-Cooled Module on p. 1007 of *IBM Technical Disclosure Bulletin* vol. 20 No. 3 Aug. 1977.

Heat Removal Module on p. 2249 of *IBM Technical Disclosure Bulletin* vol. 22 No. 6 Nov. 1979.

*Primary Examiner*—Wallace R. Burke

*Assistant Examiner*—Joel Sincavage

*Attorney, Agent, or Firm*—W. G. Fasse; D. H. Kane, Jr.

[57] **CLAIM**

The ornamental design for a heat dissipating device for a semiconductor package, as shown and described.

**DESCRIPTION**

FIG. **1** is a front view of an embodiment of the heat dissipating device for a semiconductor package;

FIG. **2** is a top plan view thereof;

FIG. **3** is a bottom plan view thereof;

FIG. **4** is a right side view thereof;

FIG. **5** is a perspective view thereof;

FIG. **6** is a sectional view taken along section line **6—6** in FIG. **2**; and,

FIG. **7** is the same view as in FIG. **4** showing the heat dissipating device attached to a semiconductor package shown in broken lines since the packages do not form any part of the claimed design.

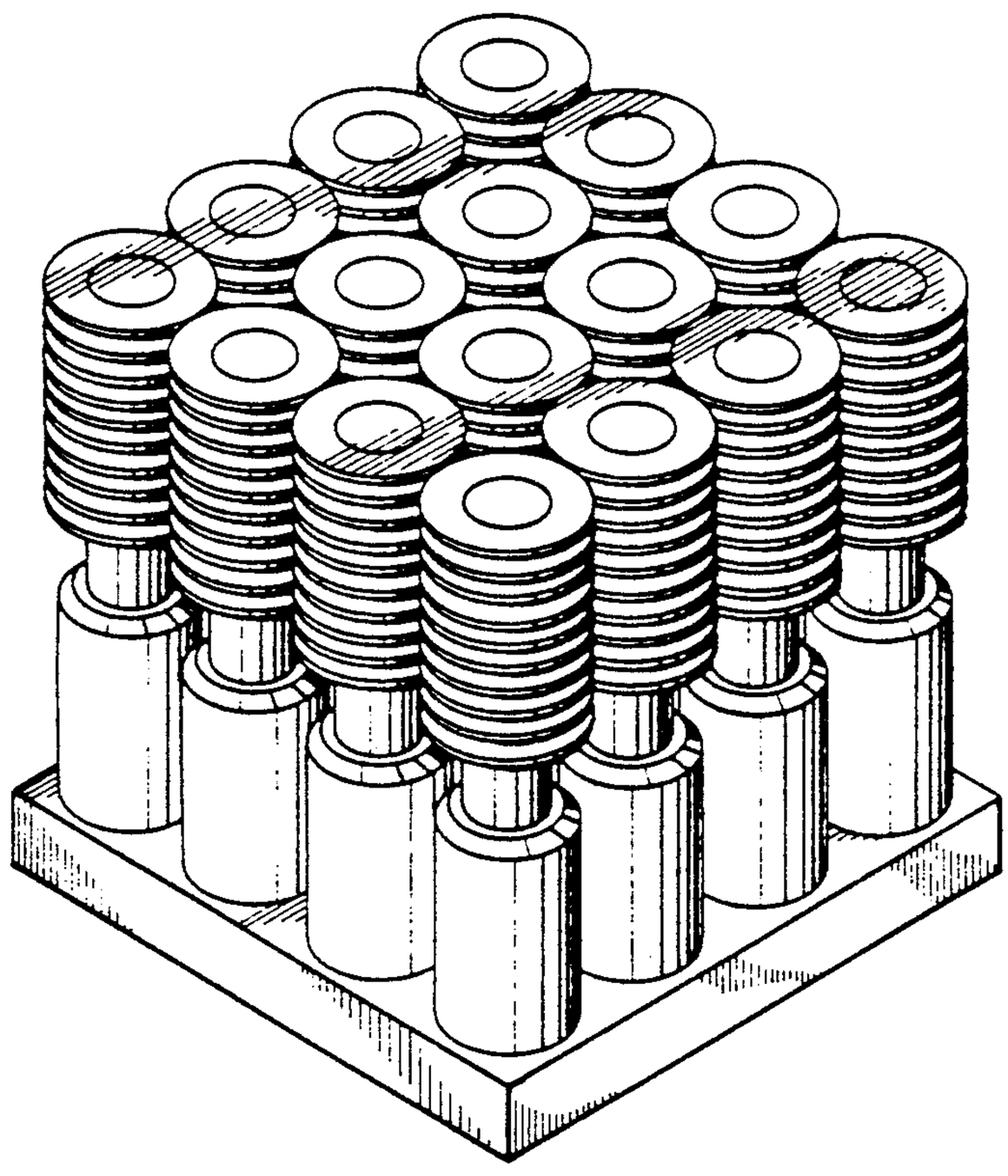

FIG. 1

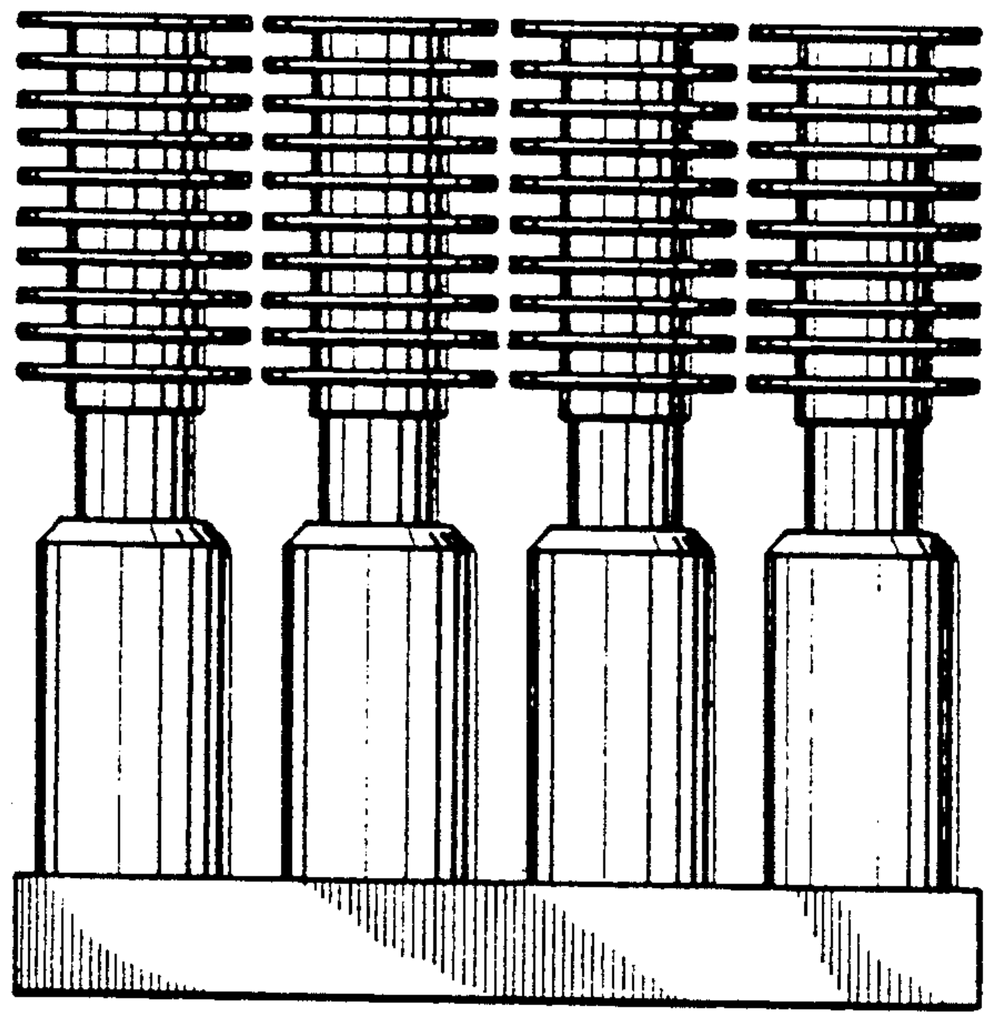

FIG. 4

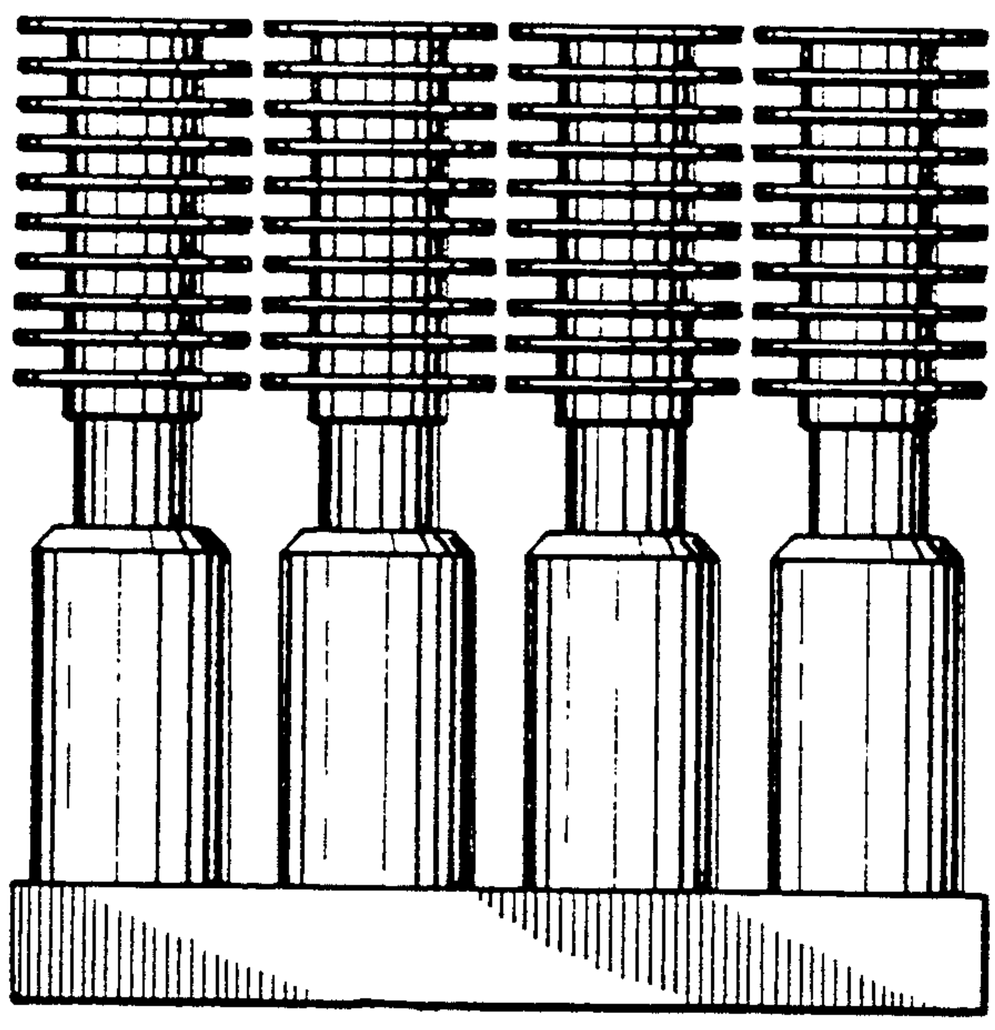

FIG. 2

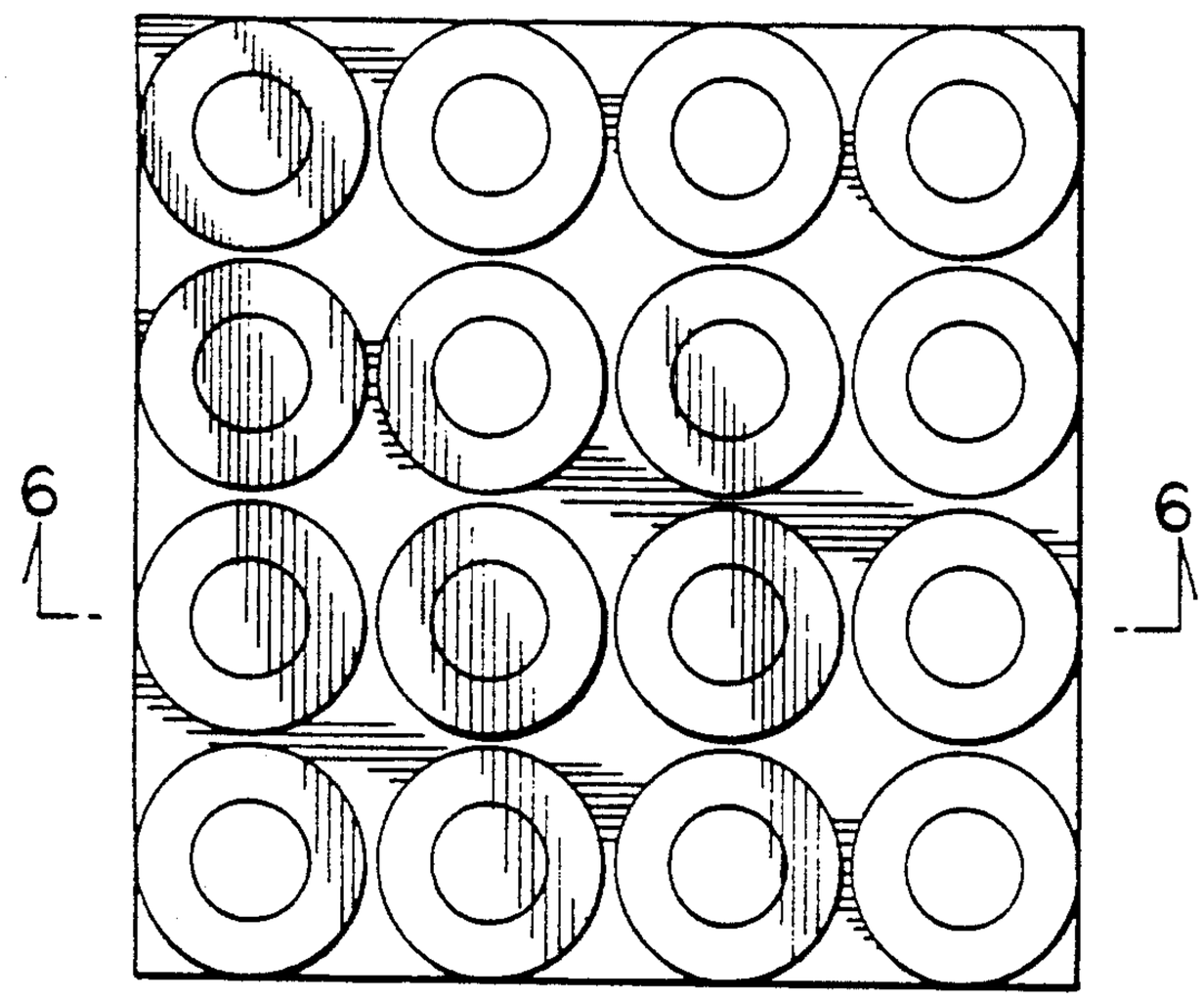


FIG. 3

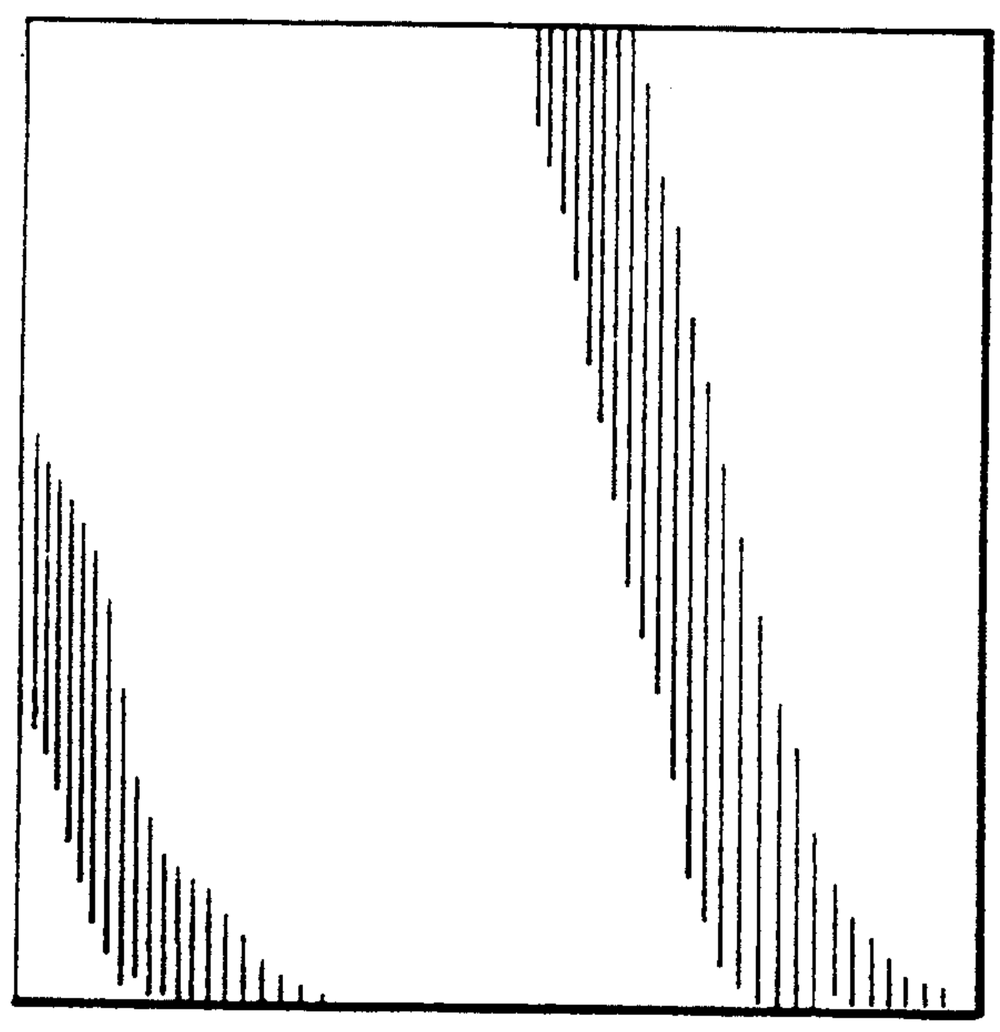

FIG. 5

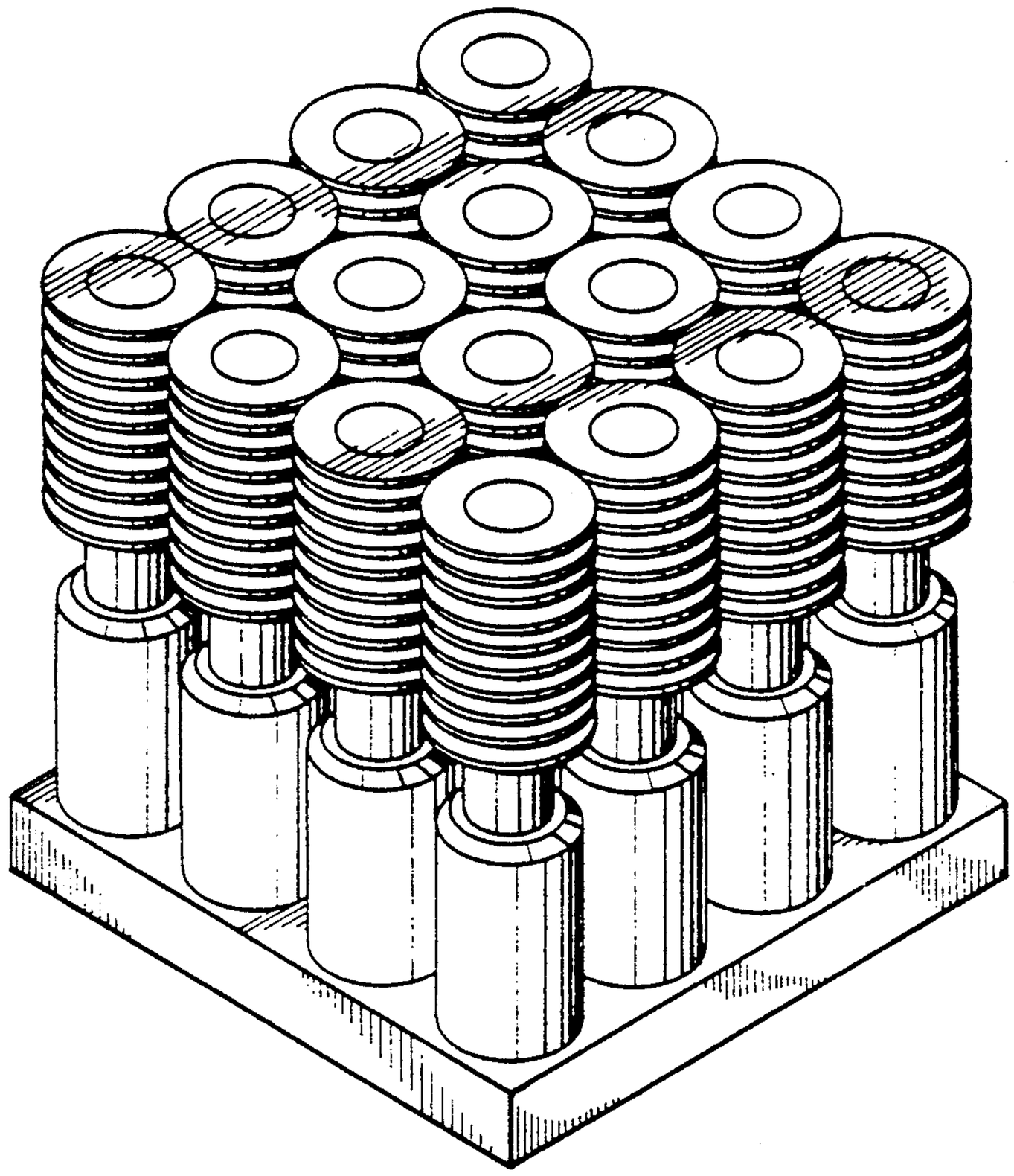

FIG. 6

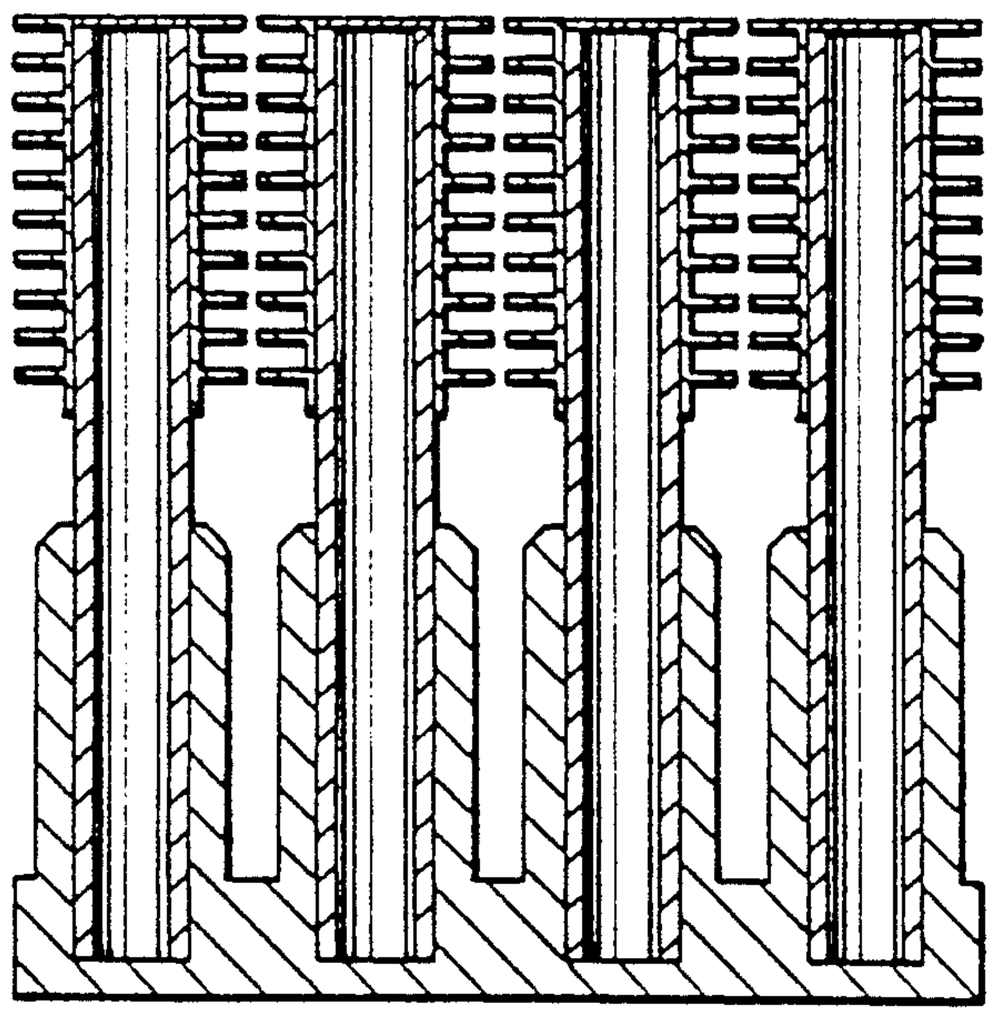

FIG. 7

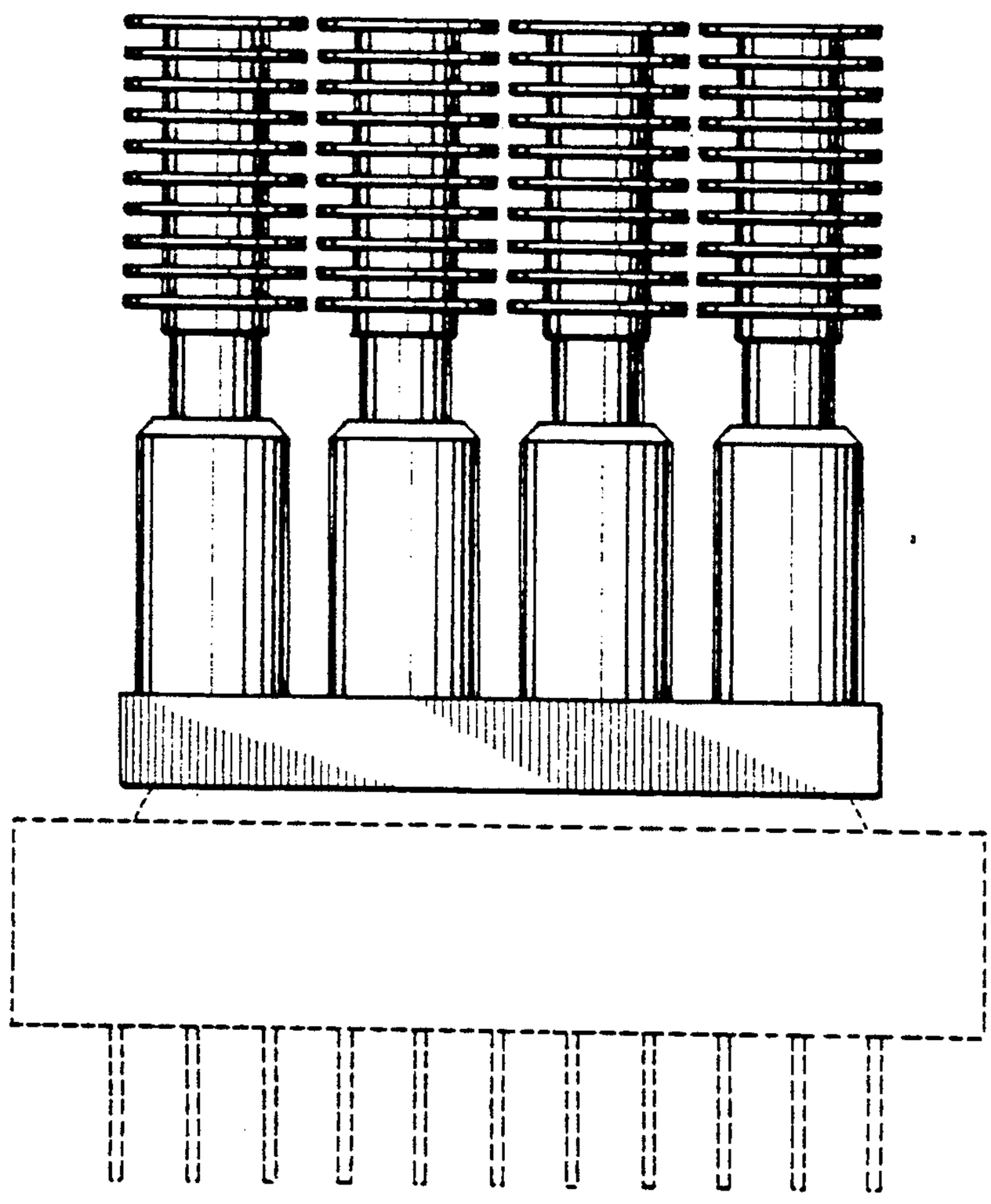

UNITED STATES PATENT AND TRADEMARK OFFICE

# CERTIFICATE OF CORRECTION

**PATENT NO.** : Des. 342,721

**DATED** : Dec. 28, 1993

**INVENTOR(S)** : Akira Itoh

**It is certified that error appears in the above-identified patent and that said Letters Patent is hereby corrected as shown below:**

Insert item [63]

— The present Design Application relates to U. S. Design Application USSN: 07/933,532, filed on August 21, 1992. —

Signed and Sealed this

Fifth Day of December, 1995

*Attest:*

Bruce Lehman

**BRUCE LEHMAN**

*Attesting Officer*

*Commissioner of Patents and Trademarks*