US00D333215S

United States Patent [19]

Brown

[11] **Patent Number: Des. 333,215**

[45] **Date of Patent: ** Feb. 16, 1993**

[54] **TOOL POUCH WITH HOLSTER FOR A CORDLESS DRILL**

[75] Inventor: **Kirk R. Brown,** Santa Clarita, Calif.

[73] Assignee: **McGuire-Nicholas Manufacturing Co.,** City of Commerce, Calif.

[**] Term: **14 Years**

[21] Appl. No.: **790,717**

[22] Filed: **Oct. 12, 1991**

[52] **U.S. Cl.** **D3/105; D2/630**

[58] **Field of Search** D3/100, 101, 102, 104, D3/105, 106; D2/630; 224/253, 240, 243, 901, 242, 251, 280, 227, 911, 904, 246

[56] **References Cited**

U.S. PATENT DOCUMENTS

D. 314,670	2/1991	Schultz	D3/105
4,917,281	4/1990	Ostermiller	224/253
4,966,321	10/1990	Outlaw	224/904 X
4,986,459	1/1991	Yarbrough, Jr.	224/904 X

OTHER PUBLICATIONS

Hyde Tools, Catalog #272, TM 1986, p. 29.
Tool Pouch #09077.
CWY Electronics Equipment and Supplies, rec'd Jun. 8, 1986, p. 140, General Purpose Pouch. 5168.

Primary Examiner—A. Hugo Word
Assistant Examiner—Doris V. Coles
Attorney, Agent, or Firm—Philip D. Junkins

[57] **CLAIM**

The ornamental design for a tool pouch with a holster for a cordless drill, as shown and described.

DESCRIPTION

FIG. **1** is a perspective view of a tool pouch with holster for a cordless drill, showing my new design;
FIG. **2** is a rear elevational view thereof;
FIG. **3** is a right side elevational view thereof;
FIG. **4** is a left side elevational view thereof;
FIG. **5** is a top plan view thereof; and,
FIG. **6** is a bottom plan view thereof.
The broken line showing of a drill in FIG. **1** is for illustrative purposes only and forms no part of the claimed design.

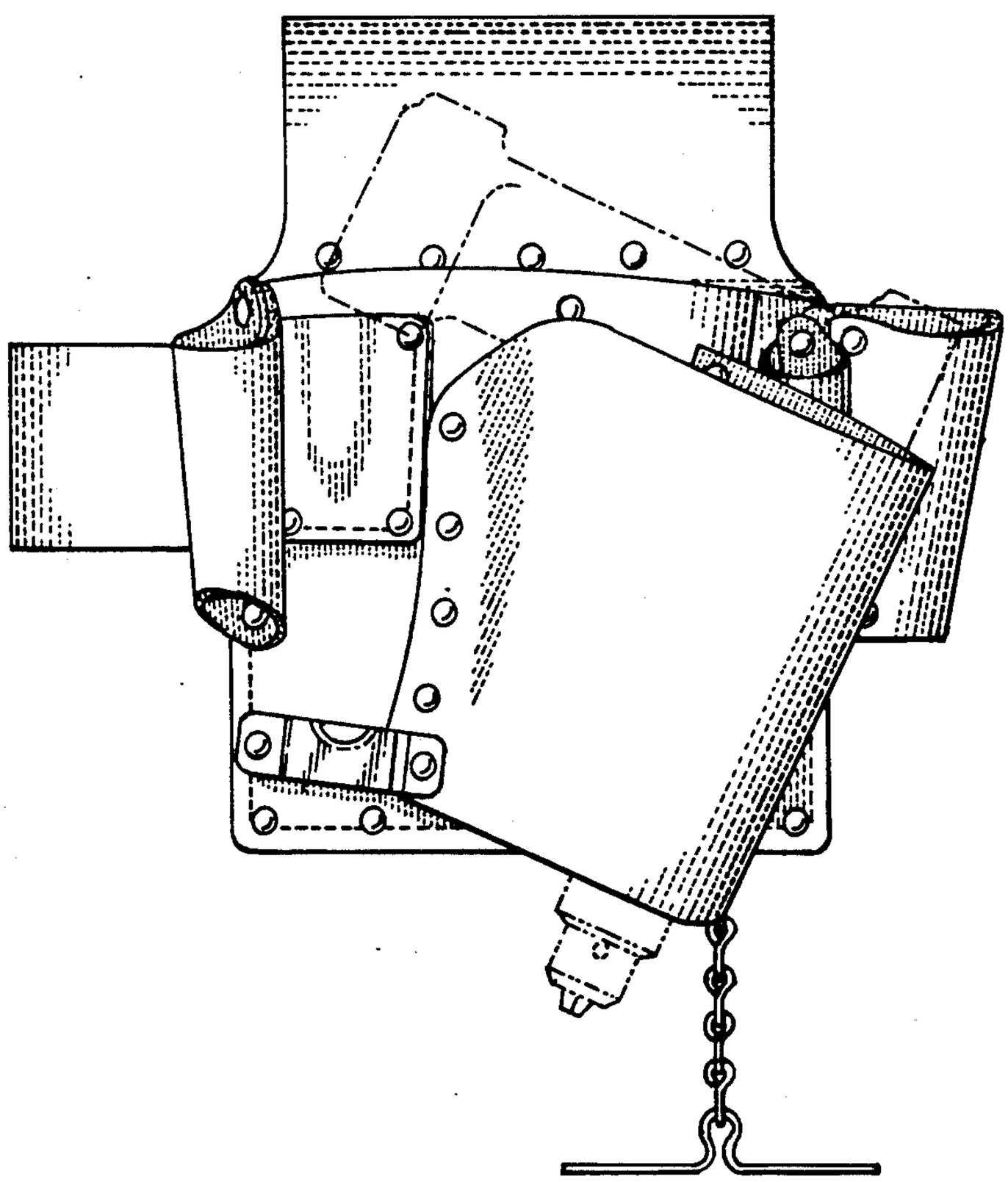

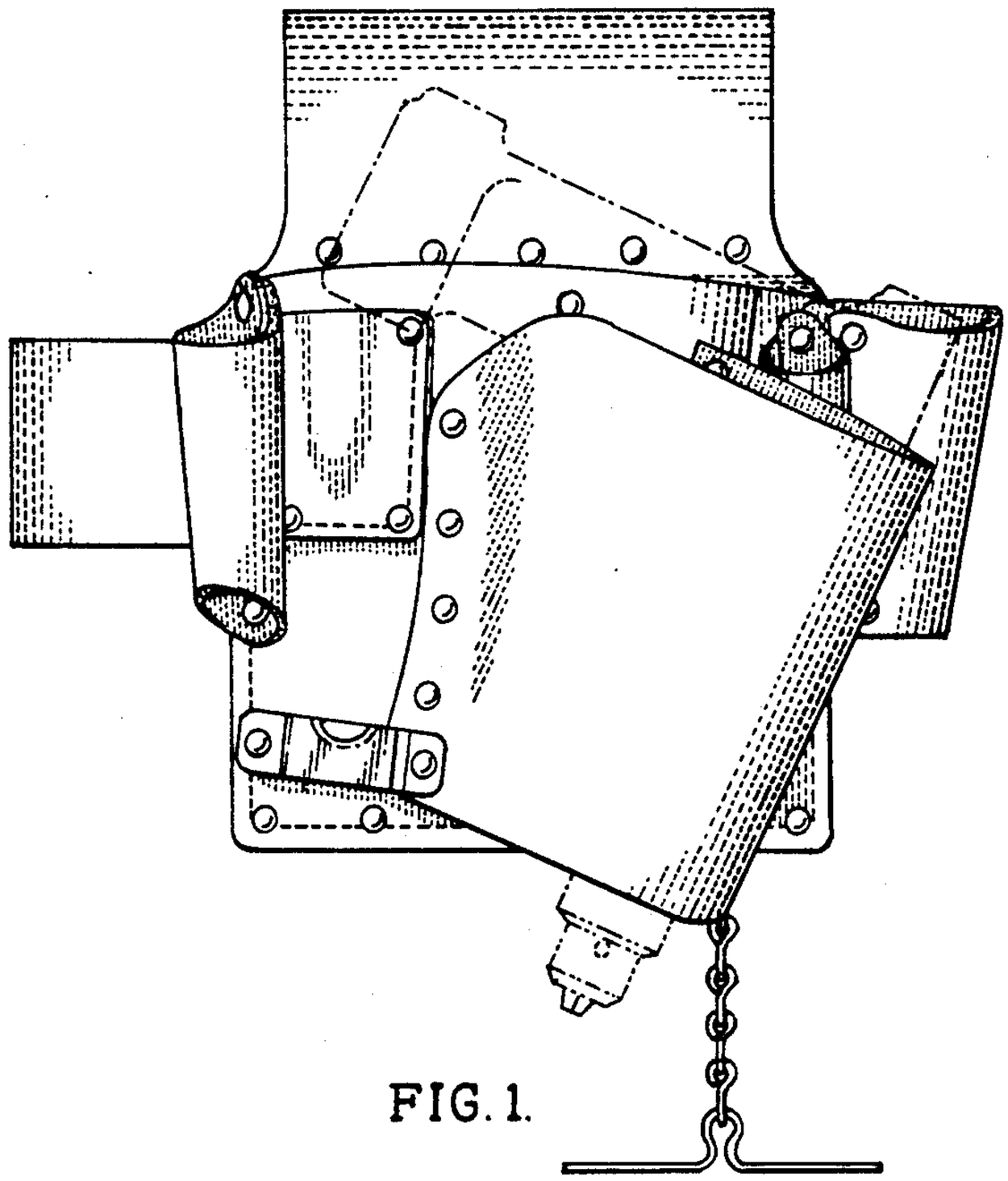

FIG. 1.

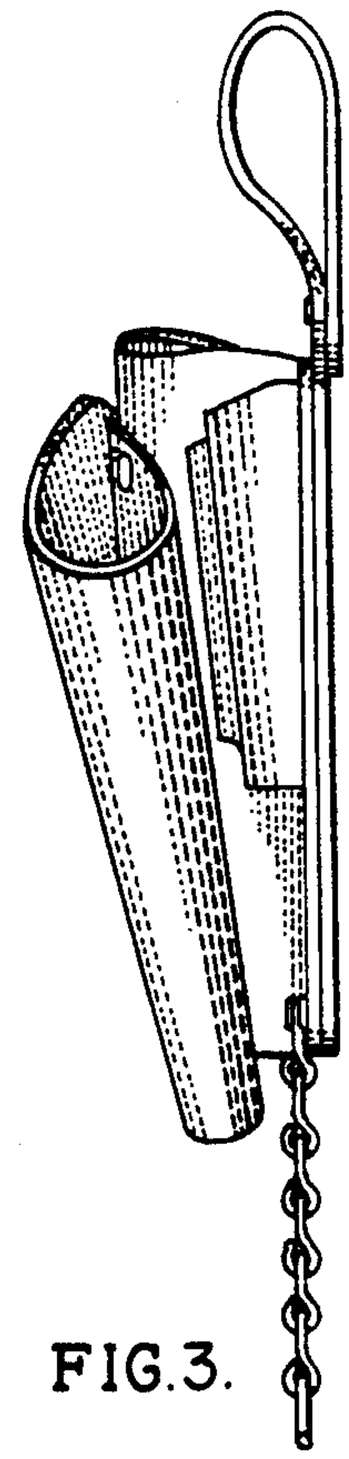

FIG. 3.

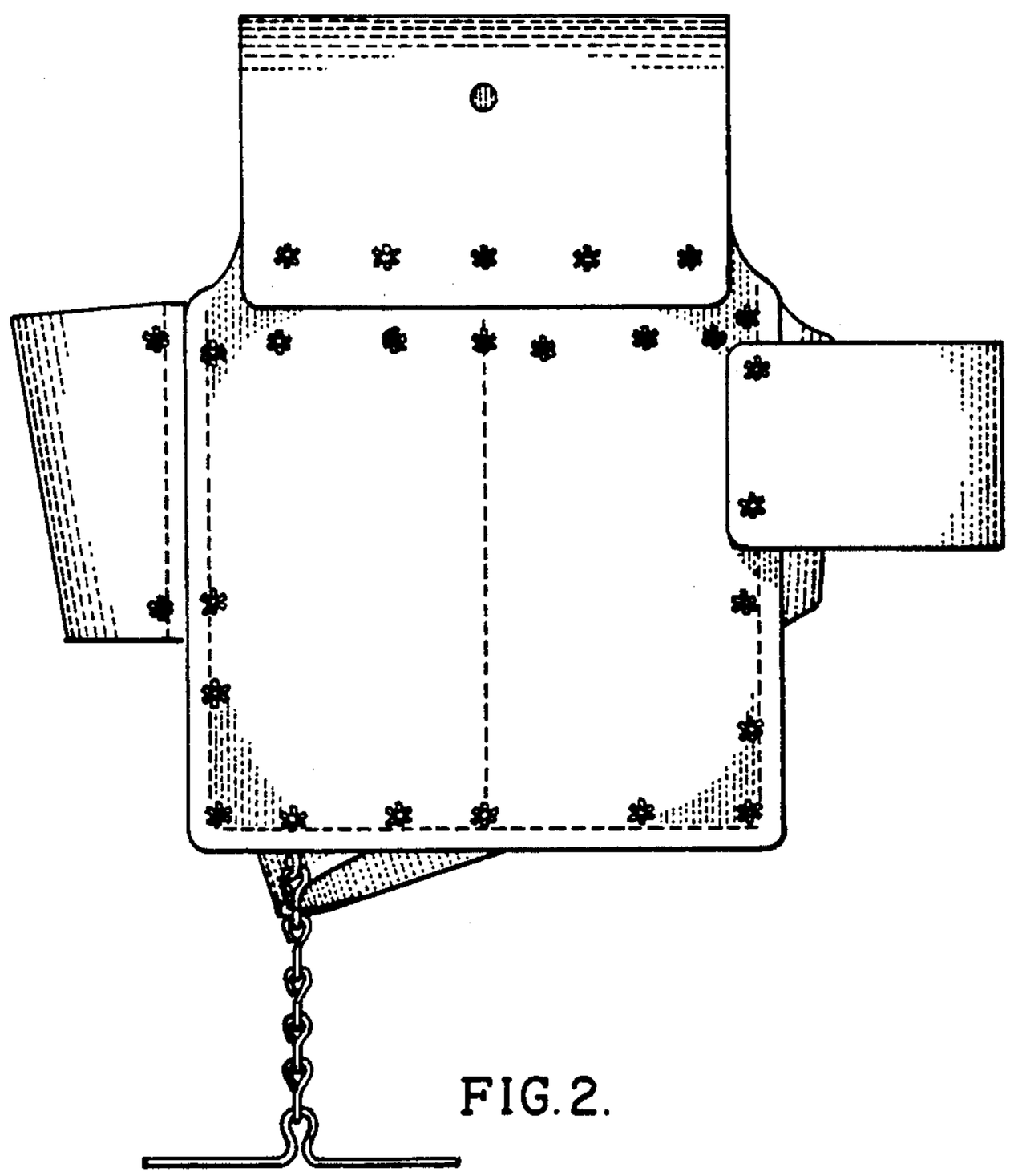

FIG. 2.

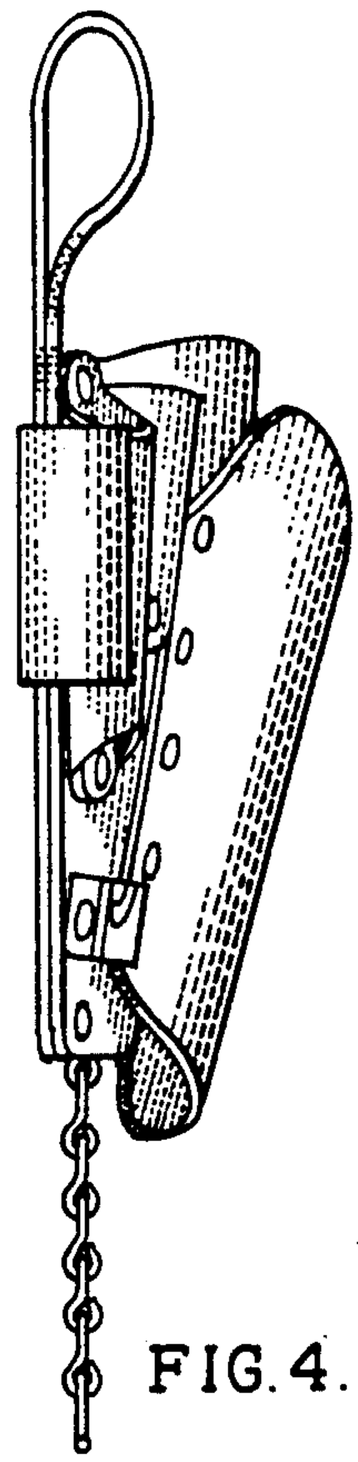

FIG. 4.

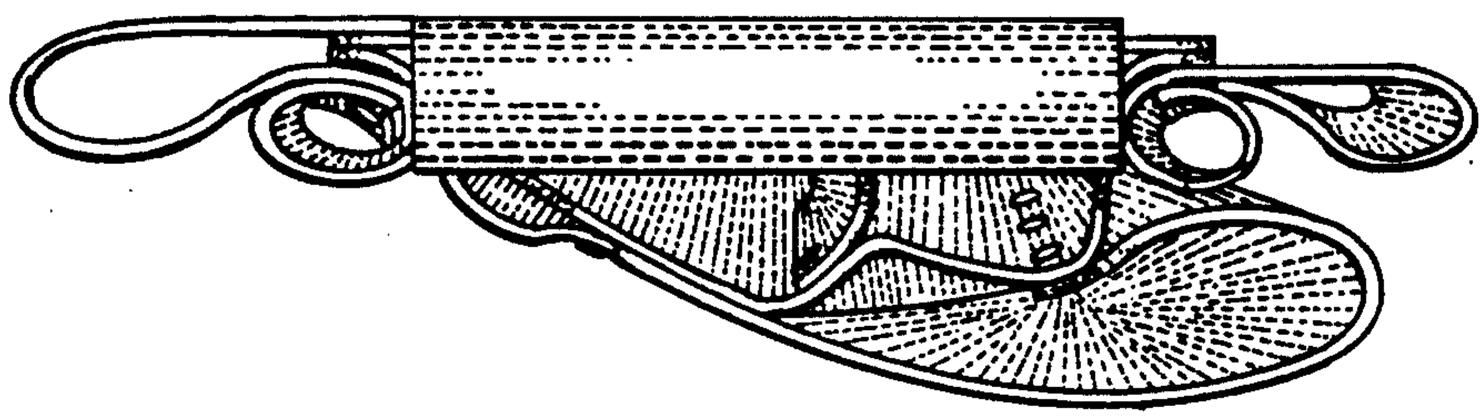

FIG. 5.

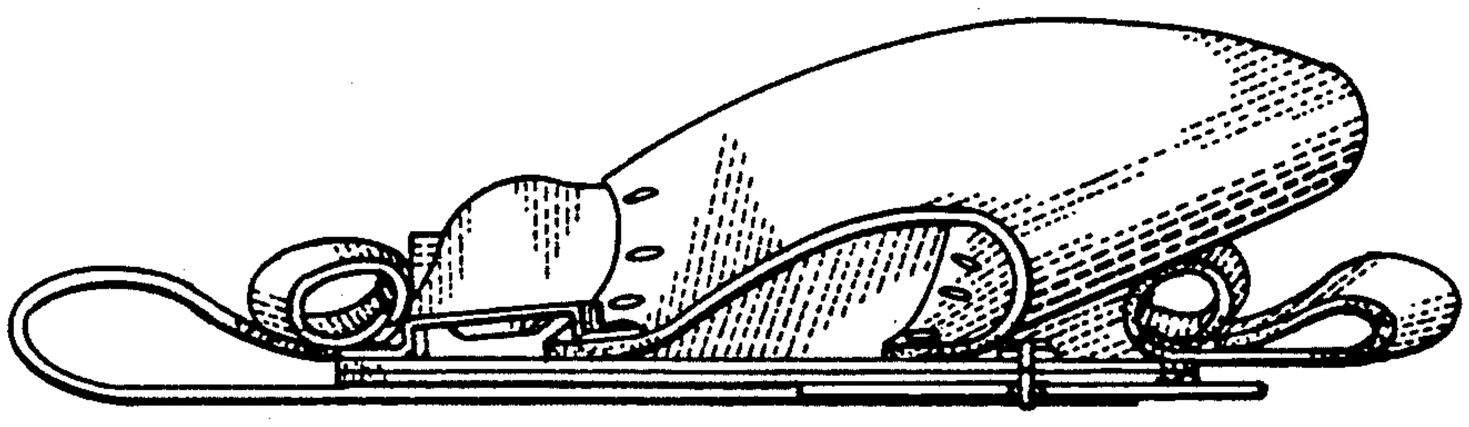

FIG. 6.