United States Patent [19]

Byrd et al.

[11] **Patent Number: Des. 319,274**

[45] **Date of Patent: ** Aug. 20, 1991**

[54] **CYCLE EXERCISER**

[75] Inventors: **Michael R. Byrd**, Opelika; **James F. Lucas**, Auburn; **Bruce F. Coody**, Opelika, all of Ala.

[73] Assignee: **Diversified Products Corporation**, Opelika, Ala.

[**] Term: **14 Years**

[21] Appl. No.: **420,227**

[22] Filed: **Oct. 12, 1989**

[52] **U.S. Cl.** **D21/194**

[58] **Field of Search** D21/191-199; 272/70.3, 73, 132; 73/379

[56] **References Cited**

U.S. PATENT DOCUMENTS

D. 280,923	10/1985	Smith .	
D. 281,520	11/1985	Kiiski .	
D. 289,669	5/1987	Kasuba .	
D. 291,462	8/1987	Aalto .	
D. 302,990	8/1989	Beistegui .	
D. 306,330	2/1990	Lucas .	
D. 307,167	4/1990	Lucas .	
4,712,790	12/1987	Szymski	272/73
4,838,544	6/1989	Sasakawa et al.	272/73
4,902,001	2/1990	Balbo	272/73
4,932,650	6/1990	Bingham et al.	272/73

OTHER PUBLICATIONS

Schwinn Air-Dyne, (Schwinn Fitness Catalog), (1987).
Tailwind II, ("Plaintiff's Exhibit 24A"), (1988).
Tailwind, (Sears Ad.), (1989).
Panasonic "Pana Plus", (Panasonic Bicycles Catalog—p. 18).
Vitamaster 79C, (1987).
Heartmate Windracer.
Healthmaster 410, (#8141).
13-0150 DP Shape Mate 1000.

Primary Examiner—Charles A. Rademaker
Attorney, Agent, or Firm—Banner, Birch, McKie & Beckett

[57] **CLAIM**

The ornamental design for a cycle exerciser, as shown and described.

DESCRIPTION

FIG. **1** is a perspective view of a cycle exerciser showing our new design;
FIG. **2** is a side elevational view thereof, the opposite side being substantially the mirror image of that shown;
FIG. **3** is a front elevational view thereof;
FIG. **4** is a rear elevational view thereof; and
FIG. **5** is a top plan view thereof.

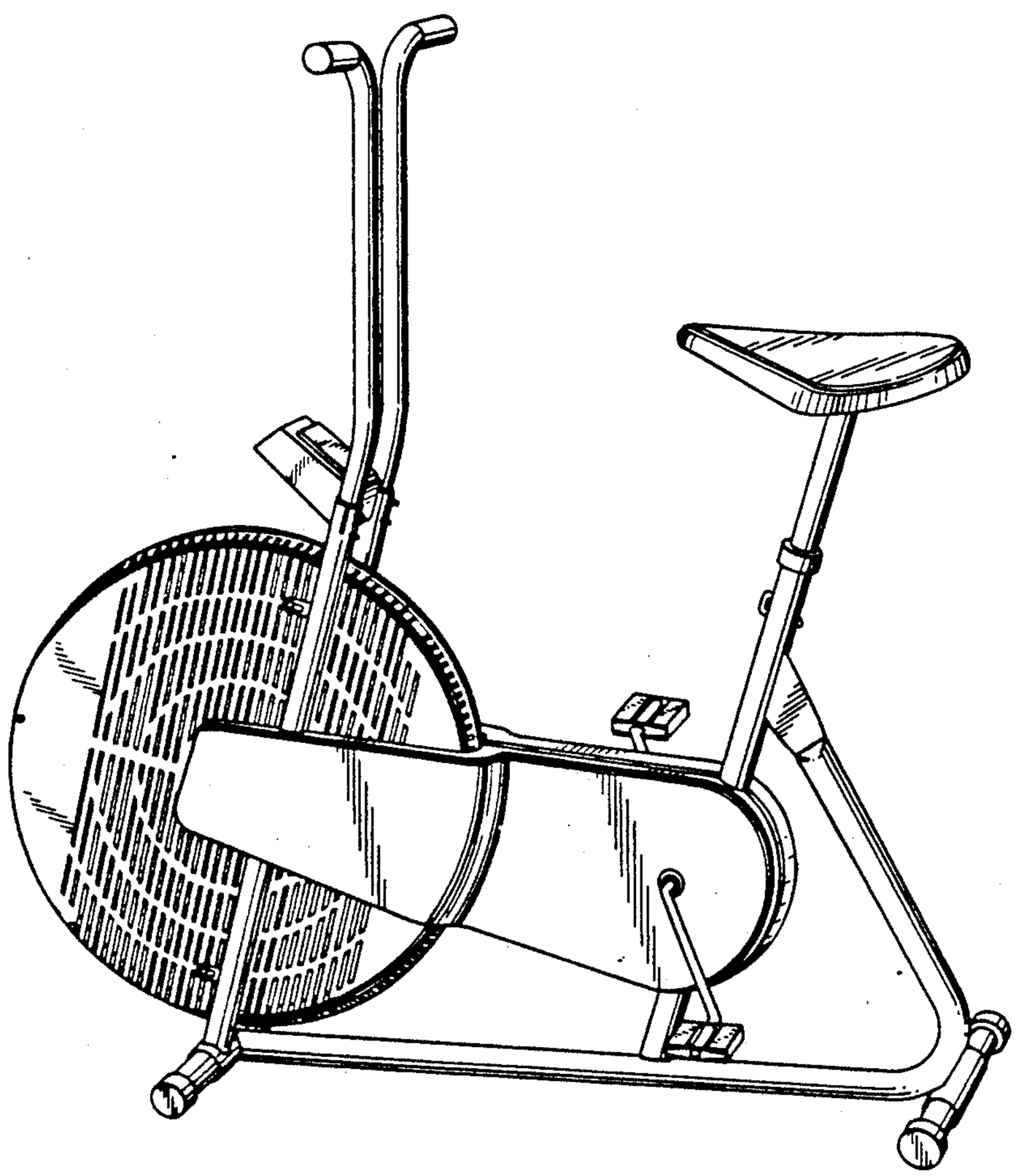

FIG. 1.

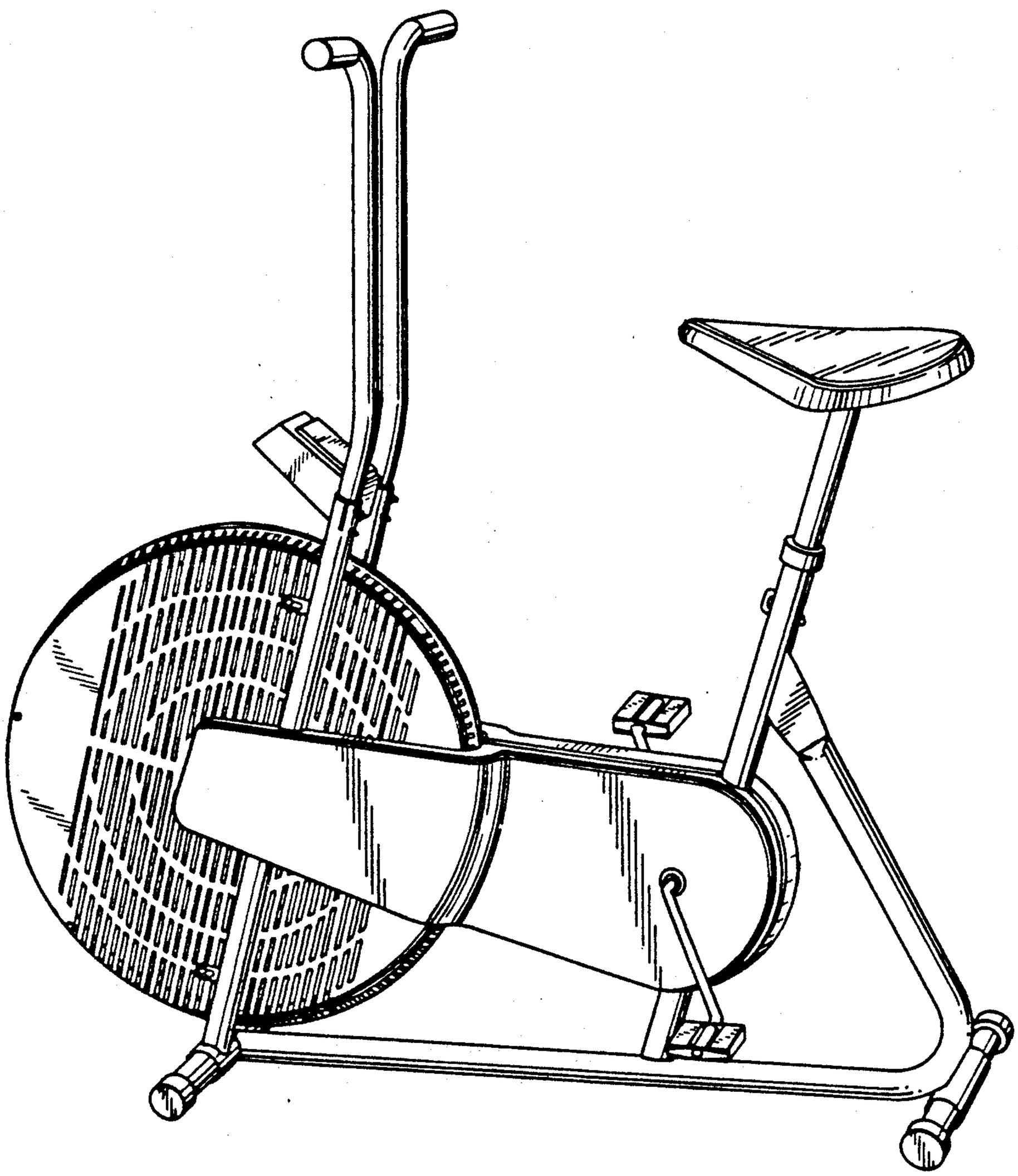

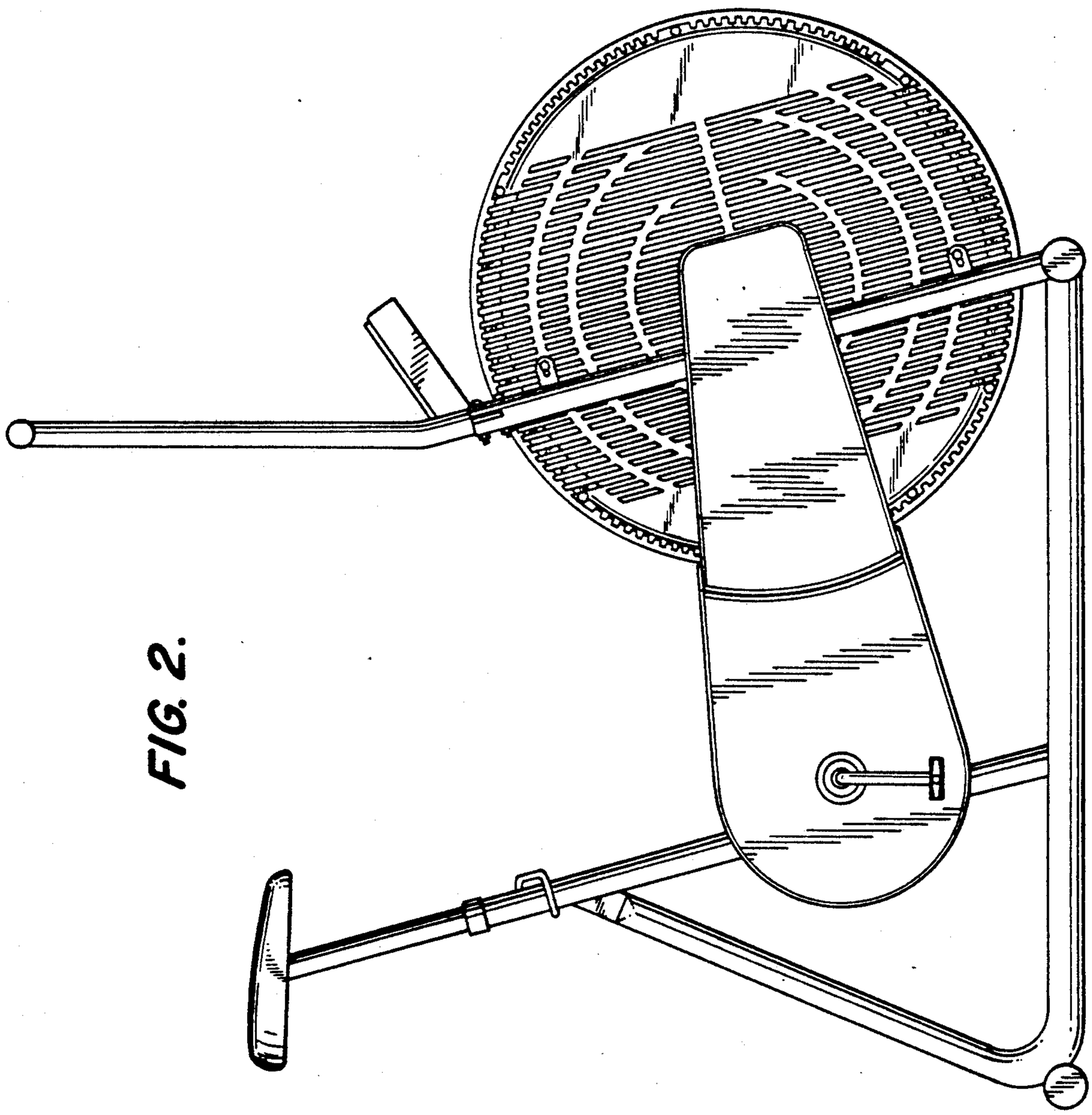

FIG. 2.

FIG. 3.

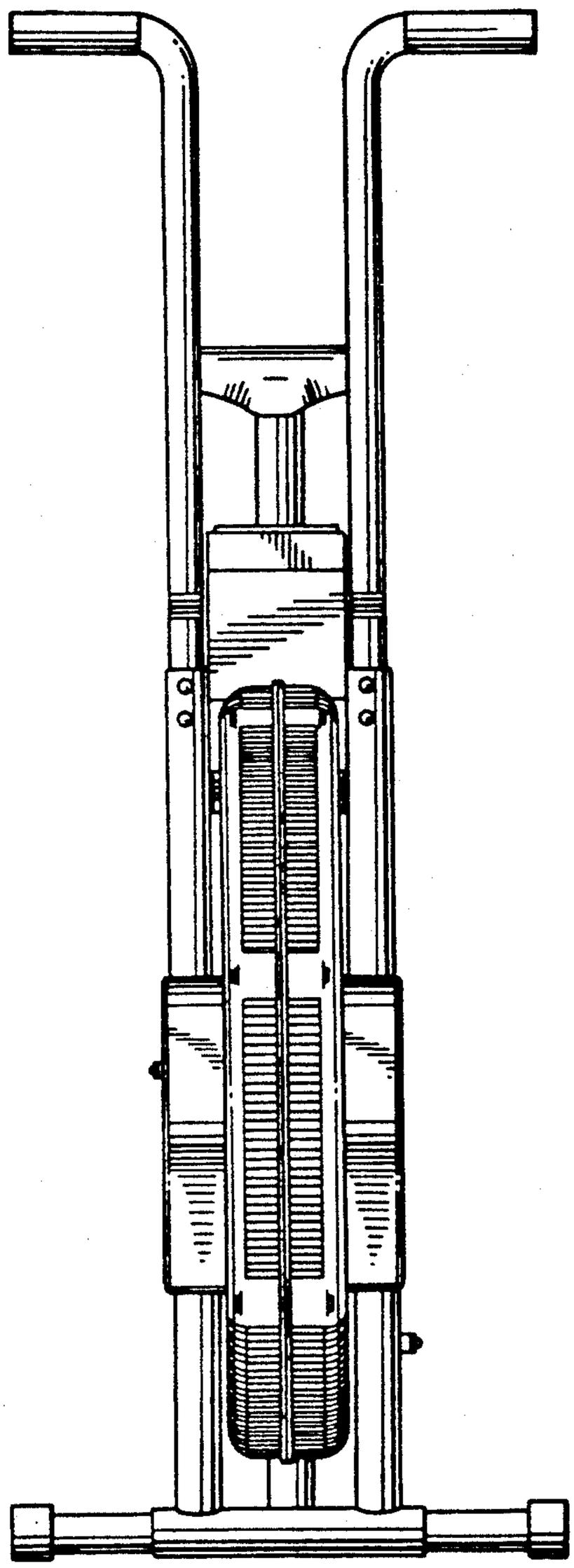

FIG. 4.

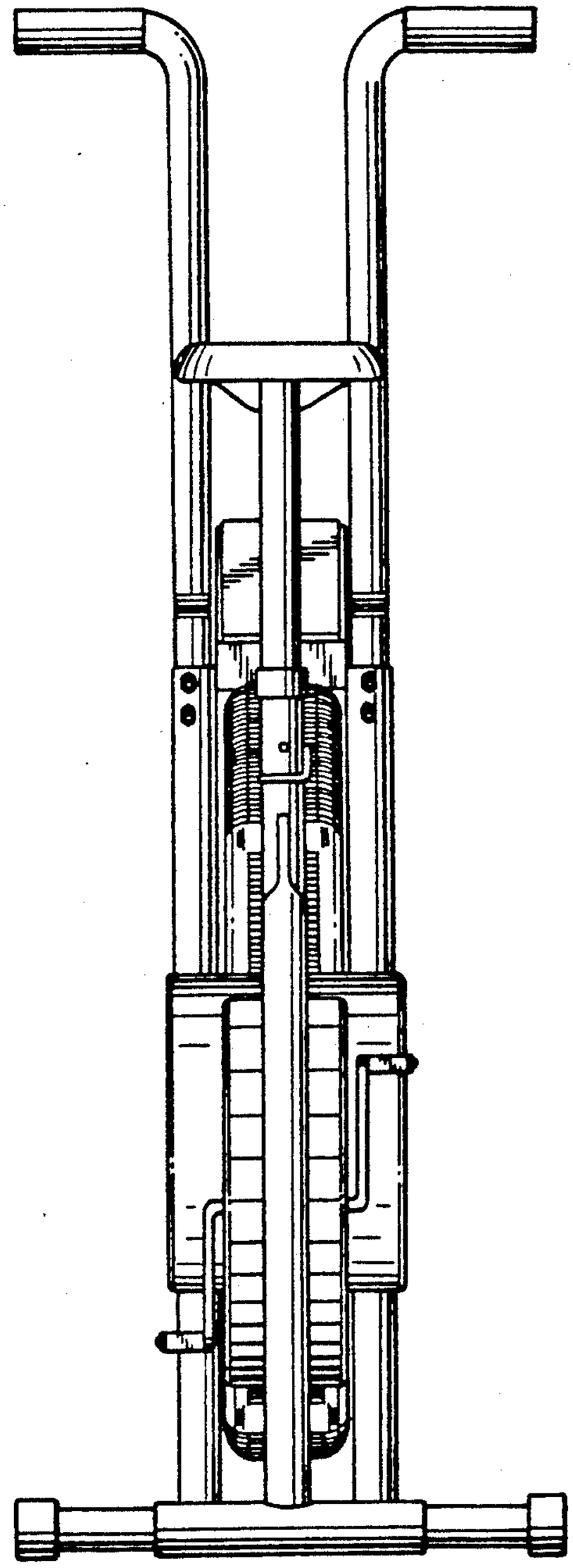

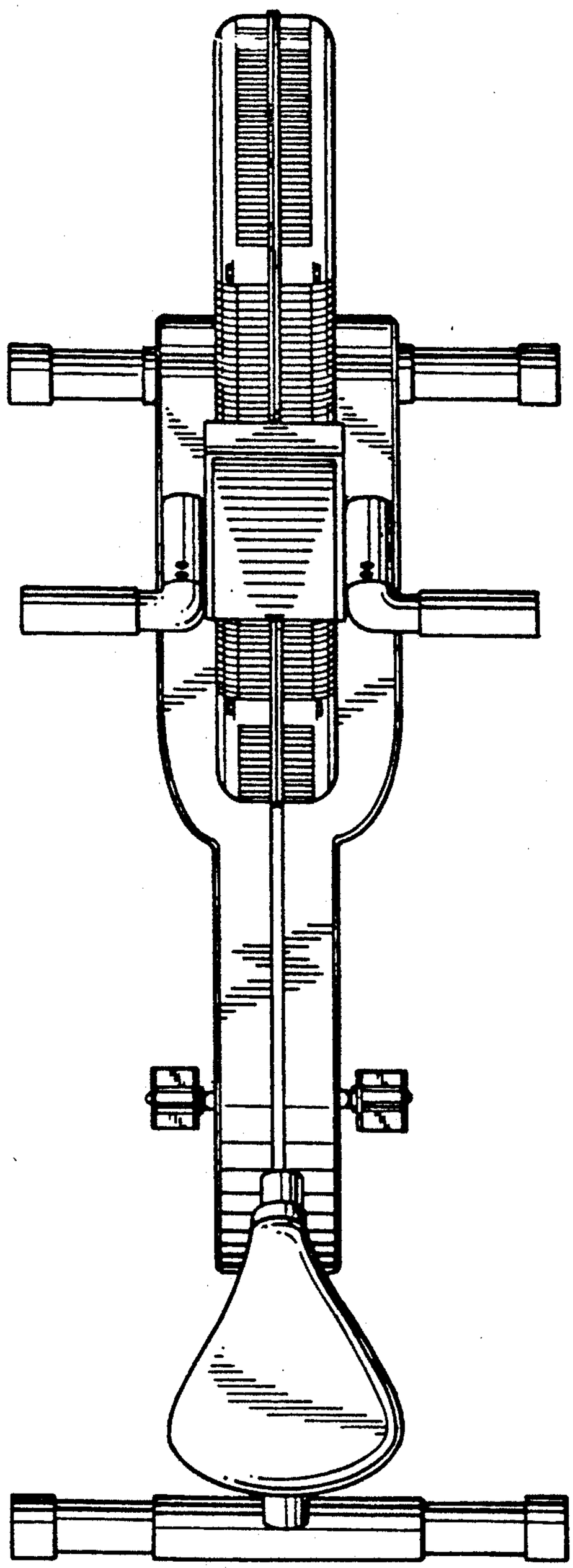

FIG. 5.