United States Patent [19]

Remick

[11] **Patent Number: Des. 313,780**

[45] **Date of Patent: ** Jan. 15, 1991**

[54] **TIRE**

[75] Inventor: **Edward M. Remick**, Taylors, S.C.

[73] Assignee: **Michelin Recherche et Technique**, Fribourg, Switzerland

[**] Term: **14 Years**

[21] Appl. No.: **430,350**

[22] Filed: **Nov. 2, 1989**

Related U.S. Application Data

[62] Division of Ser. No. 30,930, Apr. 1, 1987, Pat. No. Des. 305,523.

[52] **U.S. Cl.** **D12/146**

[58] **Field of Search** ..... D12/141-143, D12/145-151; 152/209 R, 209 D

[56] **References Cited**

U.S. PATENT DOCUMENTS

D. 288,078	2/1987	Hasegawa	D12/142
D. 288,189	2/1987	Ono	D12/146
D. 288,192	2/1987	Nakatani	D12/147
D. 291,550	8/1987	Graas	D12/146
D. 292,078	9/1987	Takeuchi	D12/141
D. 301,022	5/1989	Kemp	D12/141

Primary Examiner—James M. Gandy
Attorney, Agent, or Firm—Finnegan, Henderson, Farabow, Garrett & Dunner

[57] **CLAIM**

The ornamental design for a tire, as shown and described.

DESCRIPTION

FIG. **1** is a perspective view of a tire showing my new design;

FIG. **2** is an enlarged fragmentary plan view of the tread pattern thereof;

FIG. **3** is a perspective view of a tire showing a second embodiment of my new design;

FIG. **4** is an enlarged fragmentary plan view of the tread pattern of FIG. **3**;

FIG. **5** is a perspective view of a tire showing a third embodiment of my new design; and

FIG. **6** is an enlarged fragmentary plan view of the tread pattern of FIG. **5**.

The tread pattern is understood to be repeated uniformly throughout the circumference of the three embodiments of the tire as shown schematically by solid lines, and the opposite side is the same as that shown in FIGS. **1**, **3**, and **5**.

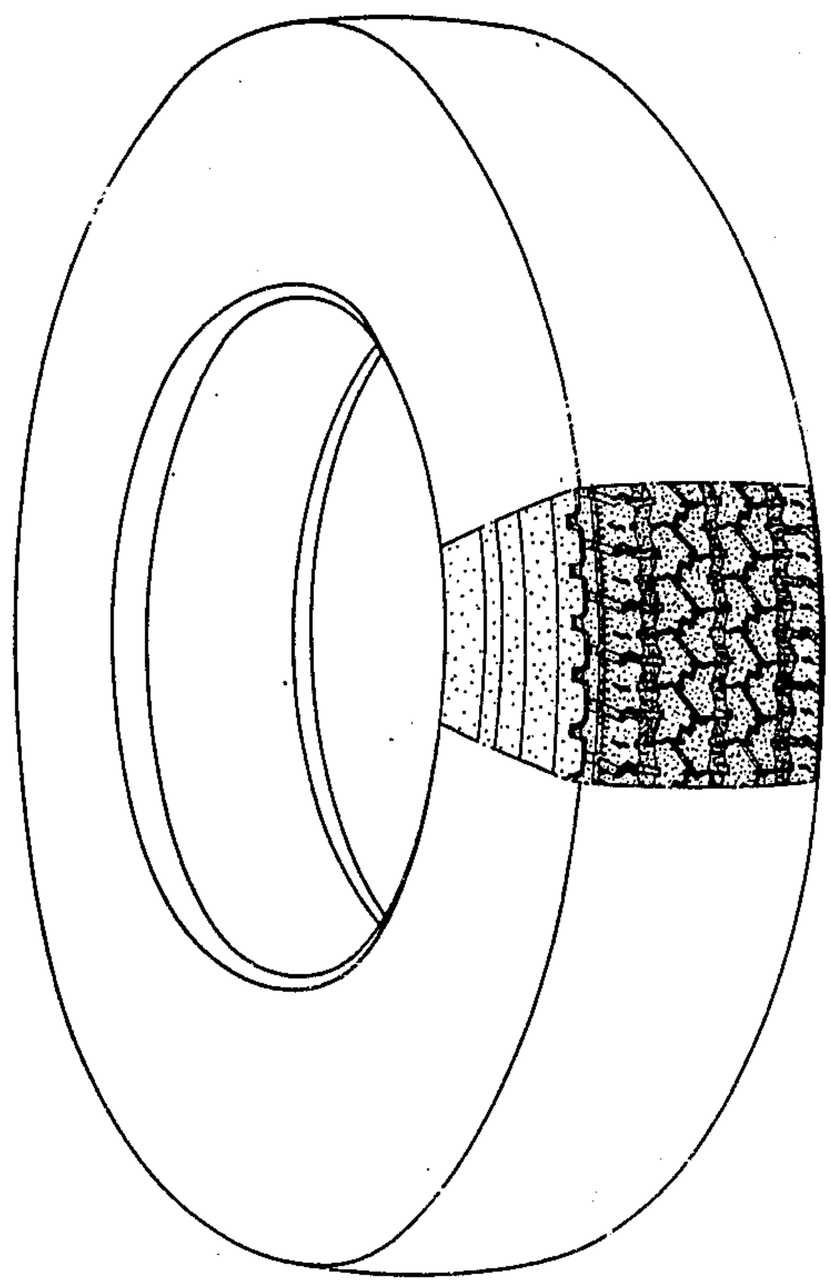

FIG. 1

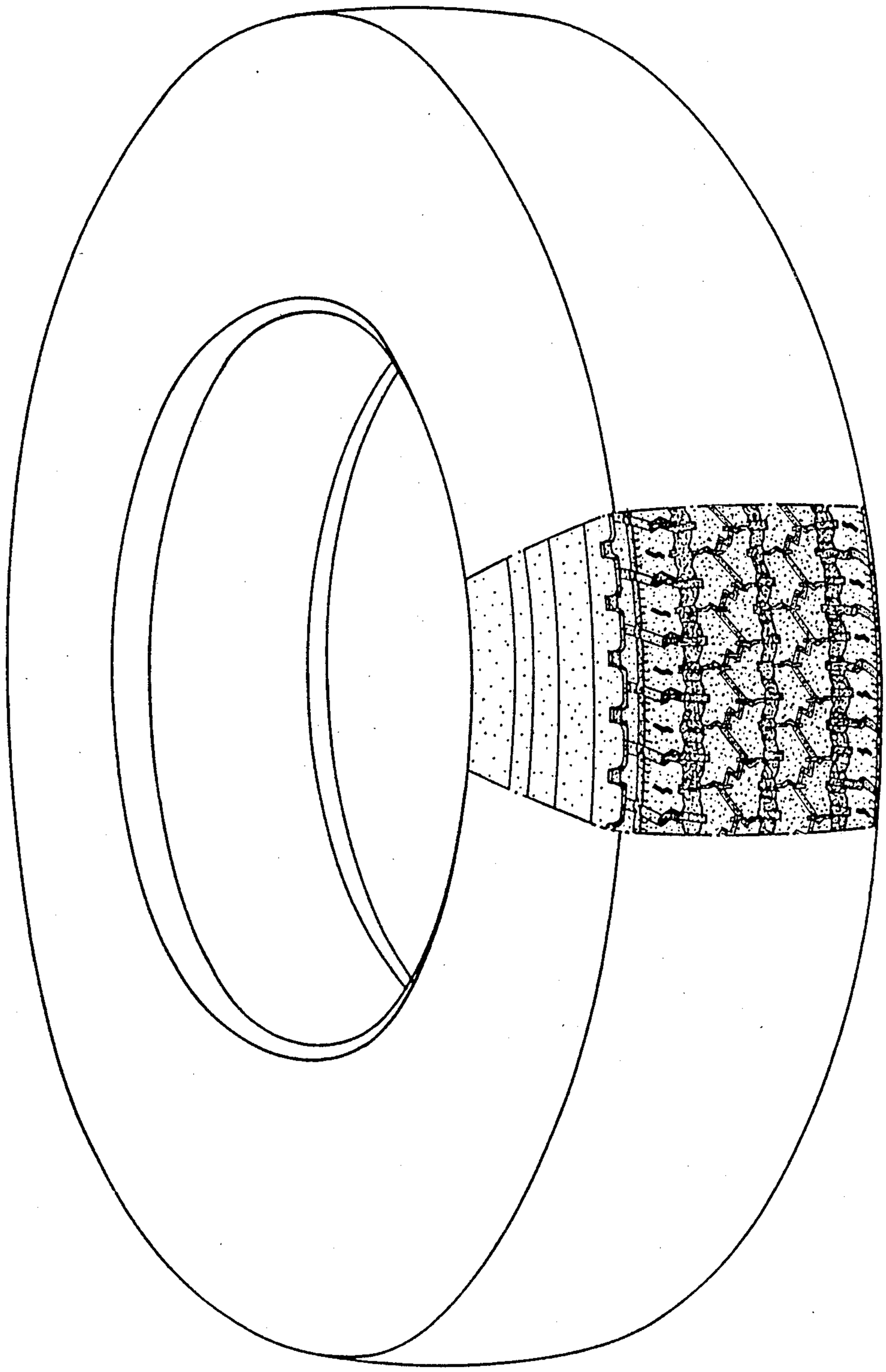

FIG. 2

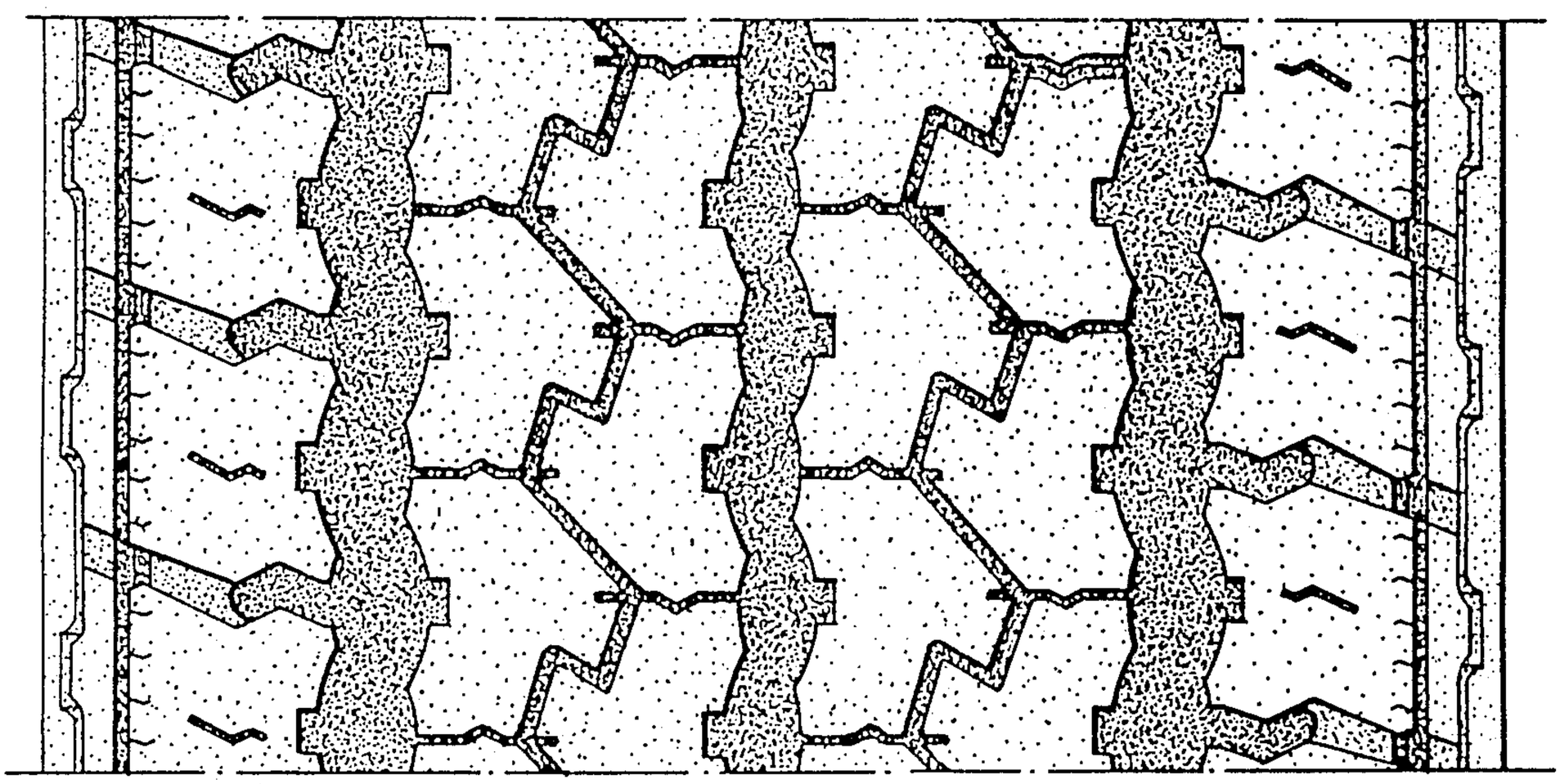

FIG. 4

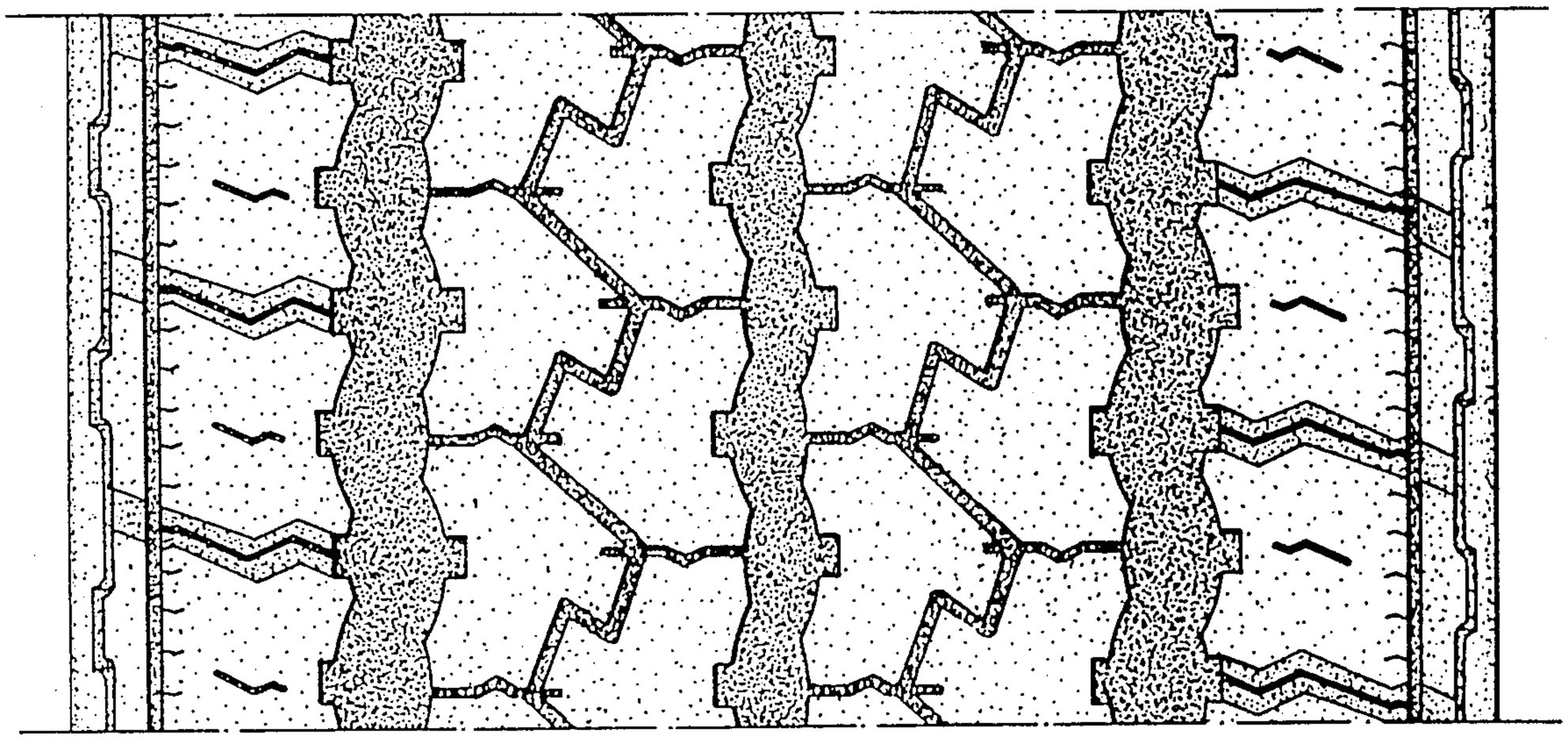

FIG. 3

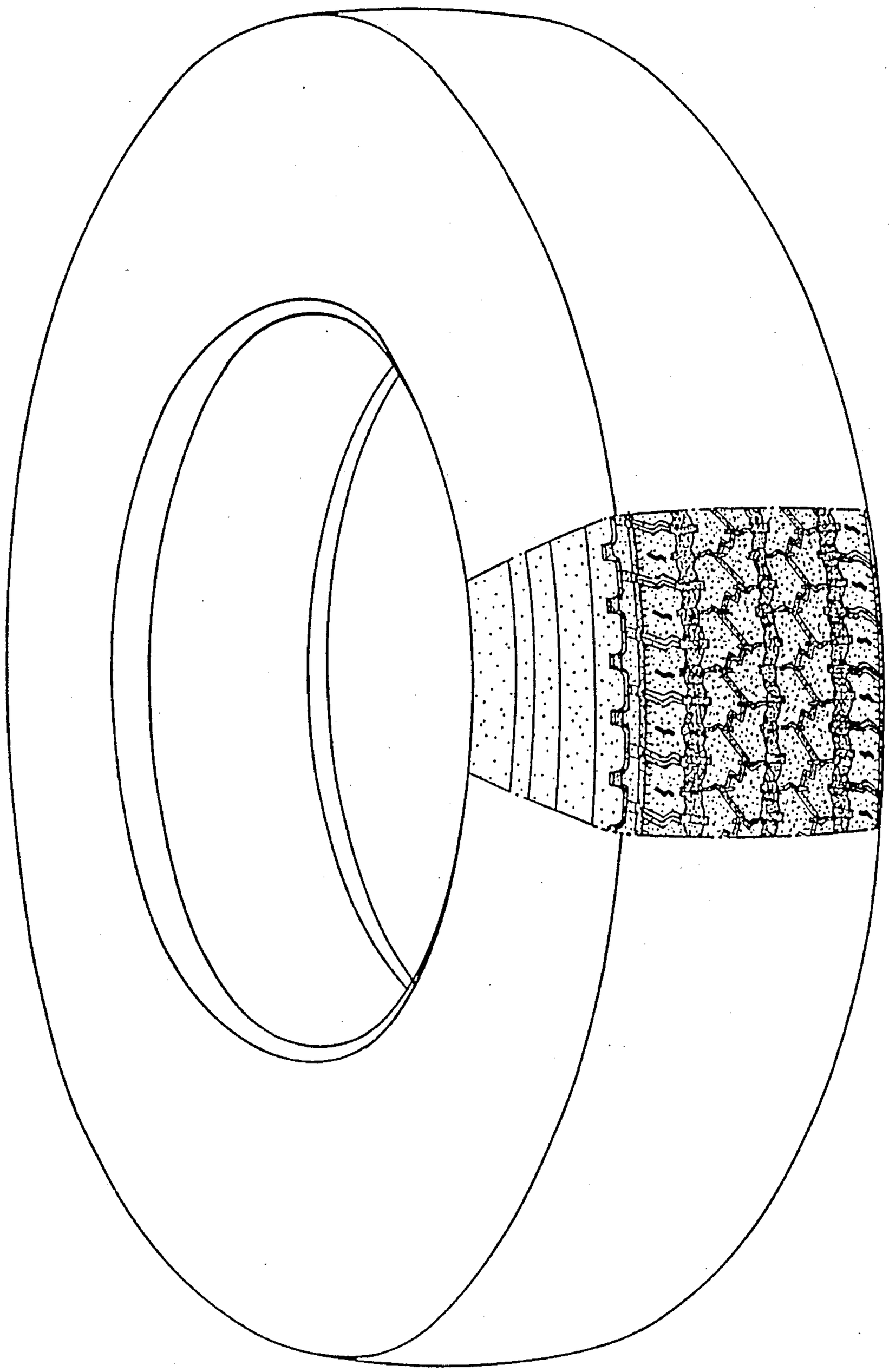

FIG. 5

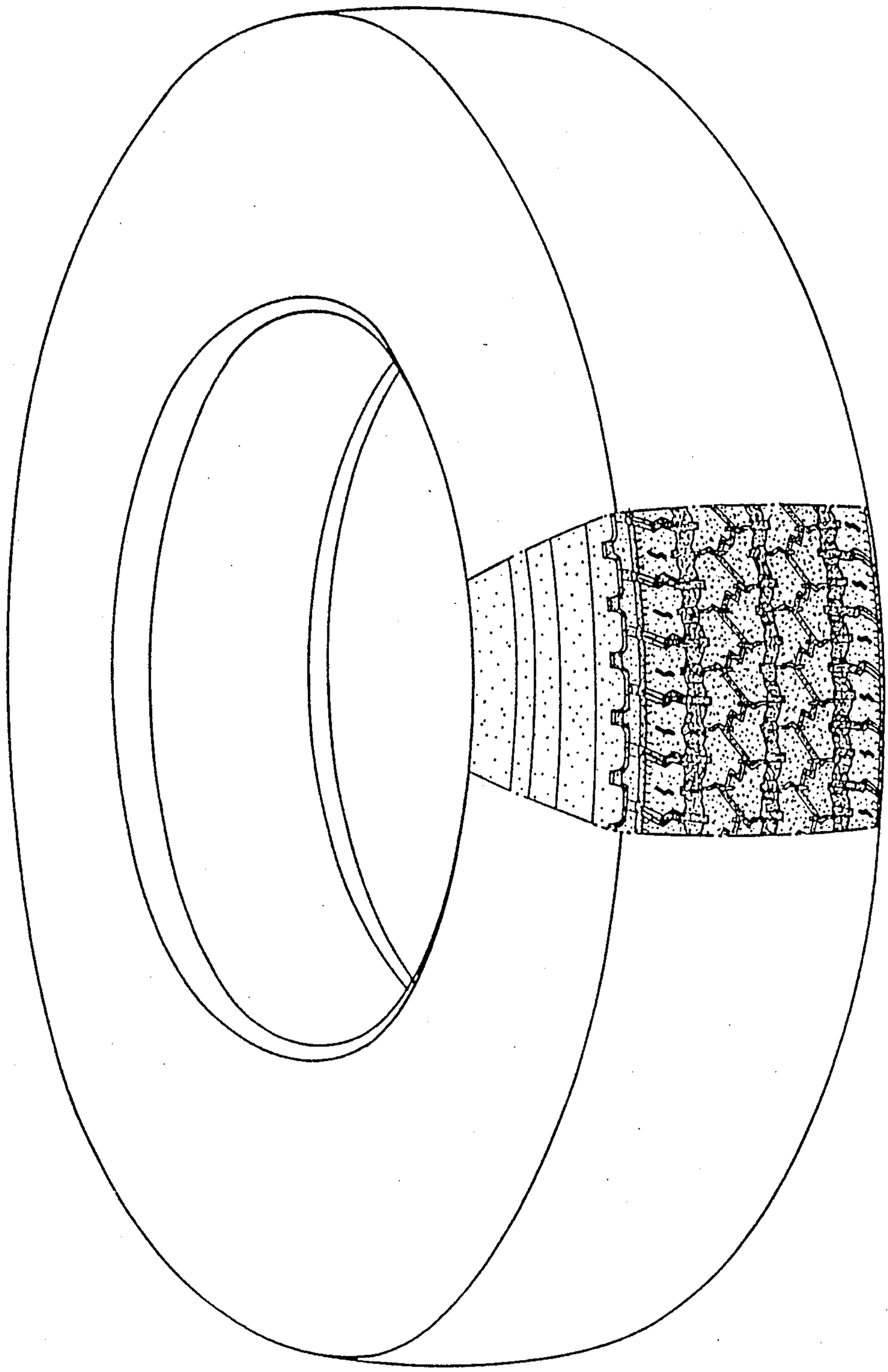
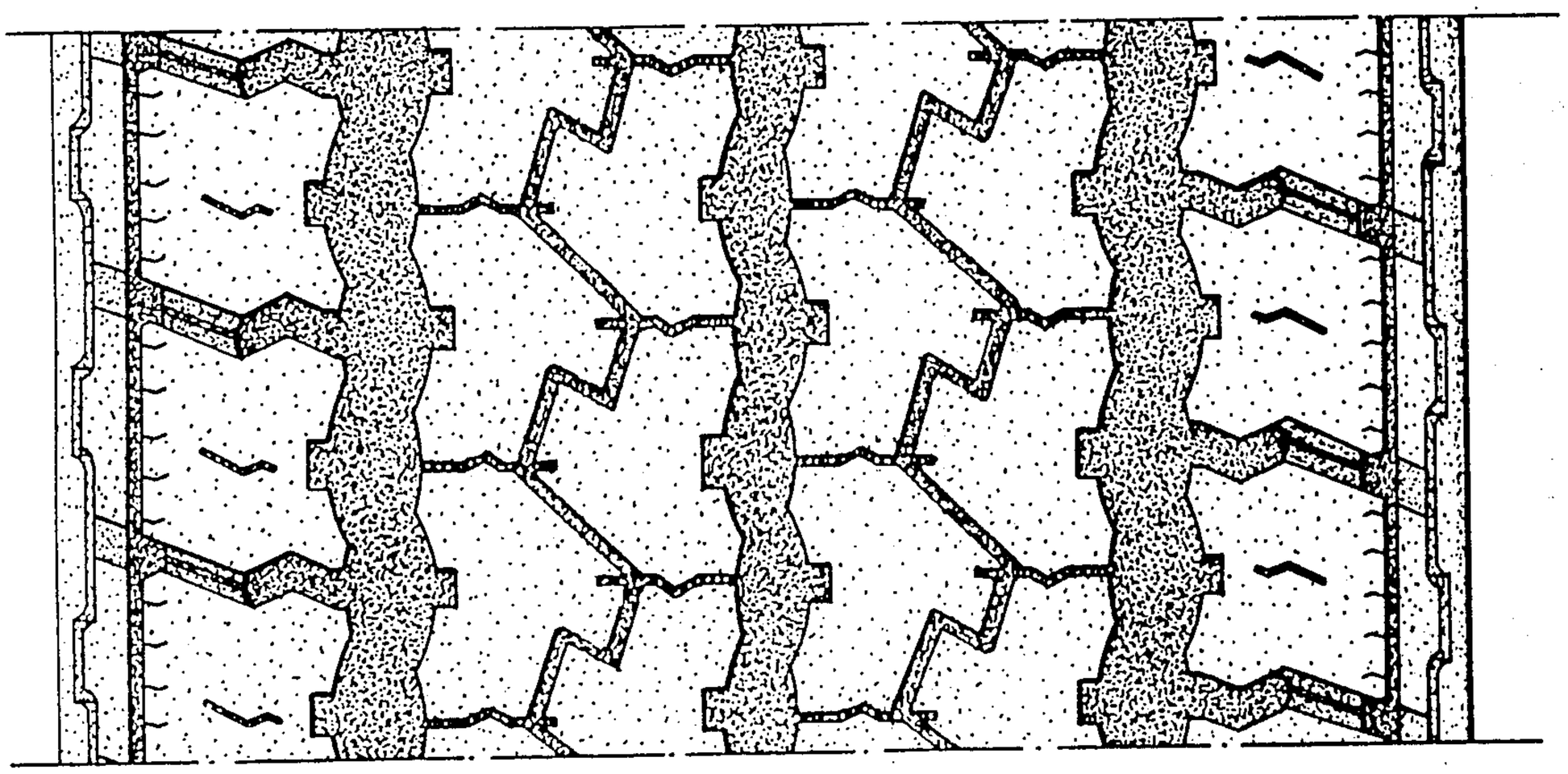
FIG. 6