United States Patent [19]

Santoiemmo

[11] **Patent Number: Des. 311,296**

[45] **Date of Patent: ** Oct. 16, 1990**

[54] **CARBONATOR**

[75] Inventor: **Carl V. Santoiemmo,** Gates Mills, Ohio

[73] Assignee: **United Soda, Inc.,** Mentor, Ohio

[**] Term: **14 Years**

[21] Appl. No.: **139,043**

[22] Filed: **Dec. 29, 1987**

[52] **U.S. Cl.** **D7/300;** D7/300.1; D7/397

[58] **Field of Search** D23/205, 202; D9/300, D9/445, 448, 436, 447; D7/312, 300, 313, 397, 316, 300.1; 261/DIG. 7; 99/323.2

[56] **References Cited**

U.S. PATENT DOCUMENTS

D. 67,626	6/1925	Travis	D7/313
D. 290,439	6/1985	Weaver	D7/300
2,805,846	9/1957	Dewan	261/DIG. 7 X
4,457,877	7/1984	Love et al.	261/DIG. 7 X

FOREIGN PATENT DOCUMENTS

245300	4/1912	Fed. Rep. of Germany	261/DIG. 7

Primary Examiner—Winifred E. Herrmann
Attorney, Agent, or Firm—Tarolli, Sundheim & Covell

[57] **CLAIM**

The ornamental design for a carbonator, as shown and described.

DESCRIPTION

FIG. **1** is a right side elevational view of a carbonator showing my new design, the broken line showing of a soda bottle is illustrative of environmental structure only and forms no part of the claimed design;

FIG. **2** is a top, front, and right side perspective view thereof on an enlarged scale;

FIG. **3** is a right side elevational view of FIG. **2,** the side opposite is a mirror image;

FIG. **4** is a front elevational view of FIG. **2;**

FIG. **5** is a rear elevational view of FIG. **2;**

FIG. **6** is a bottom plan view of FIG. **2;** and

FIG. **7** is a top plan view thereof.

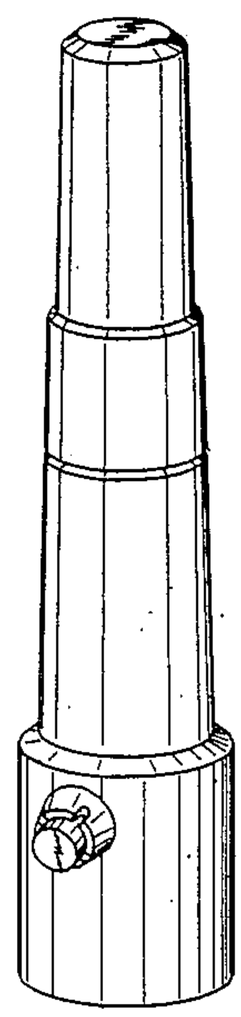

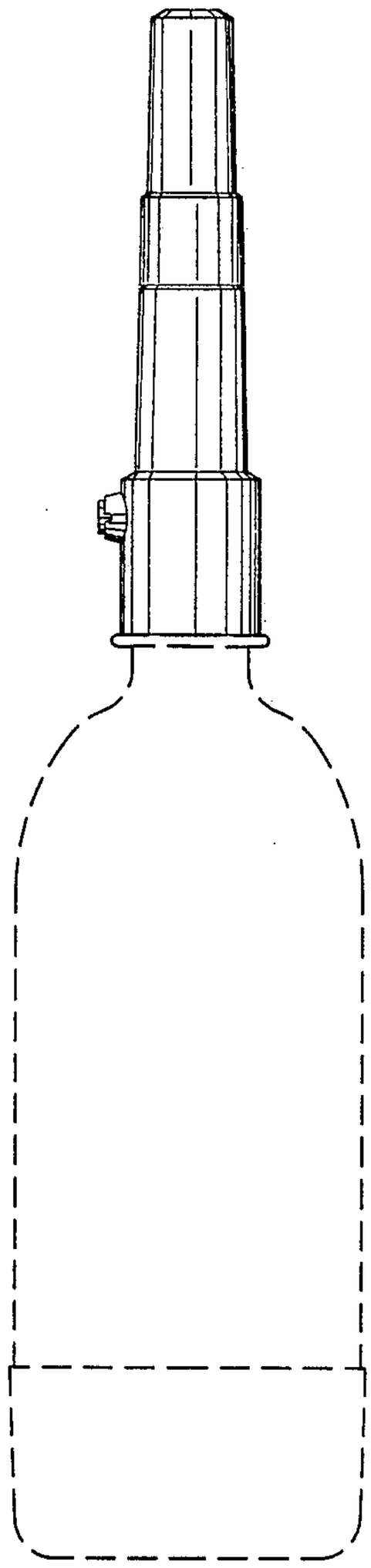

FIG. 1

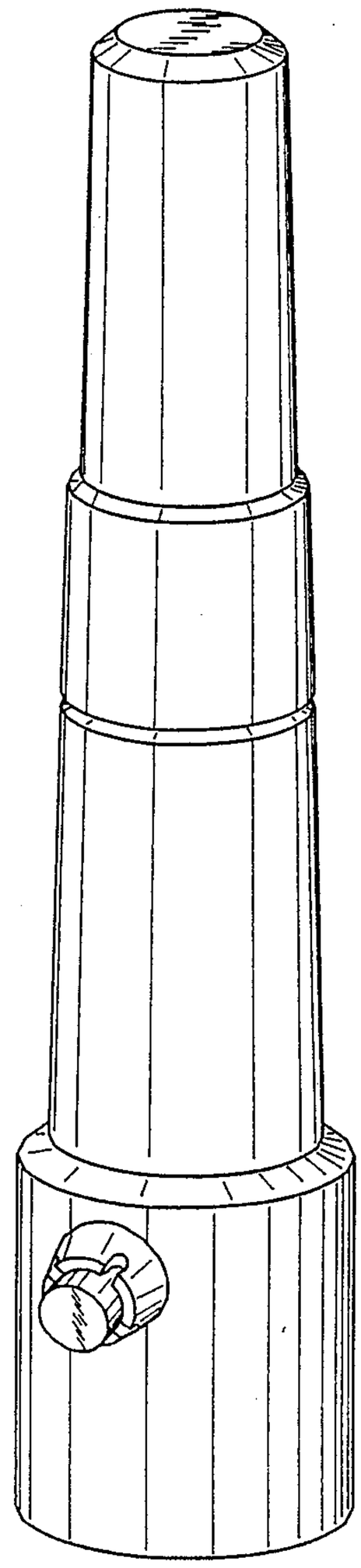

FIG. 2

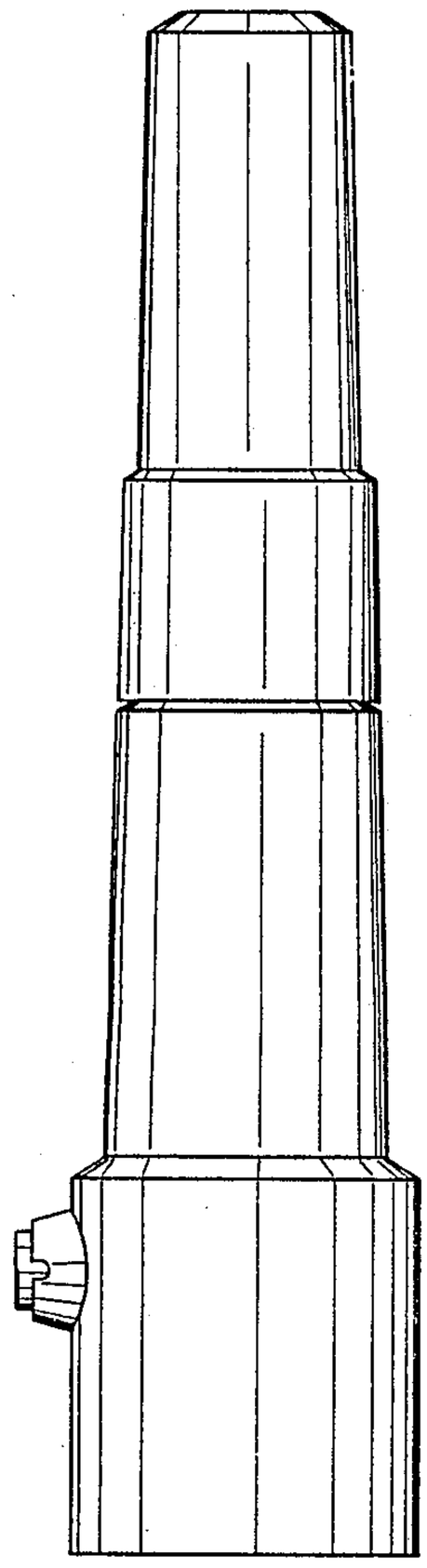

FIG. 3

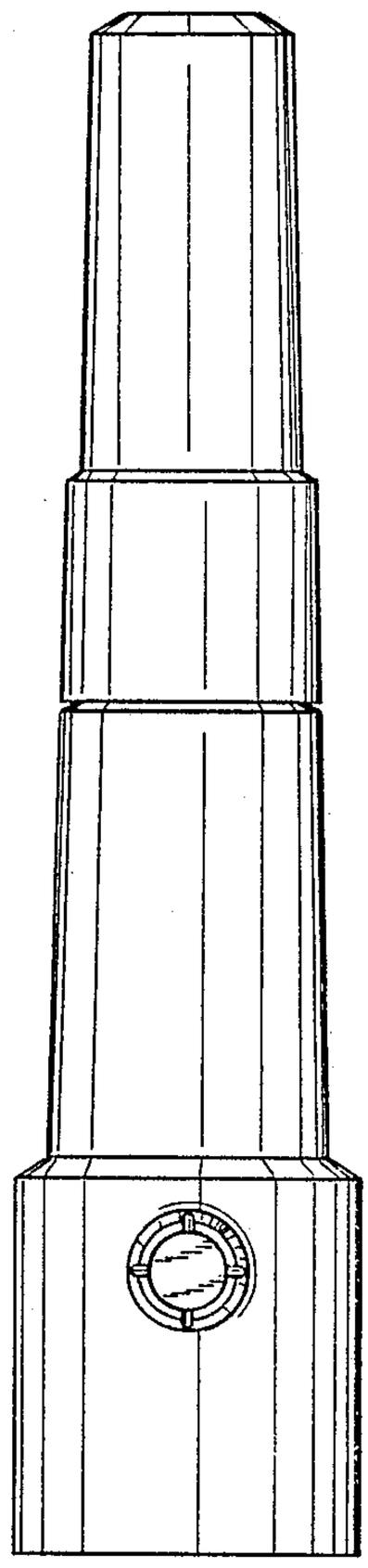

FIG. 4

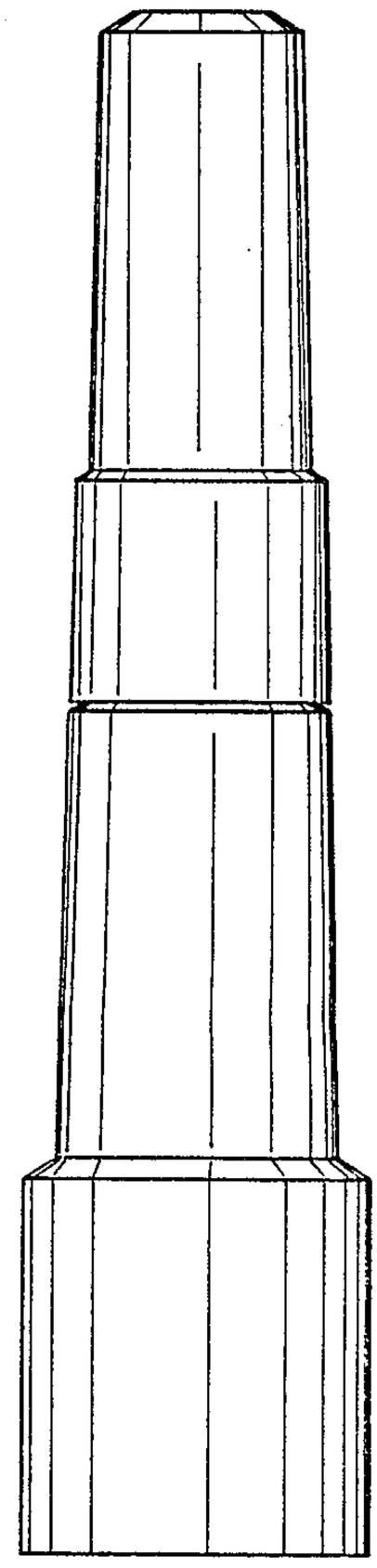

FIG. 5

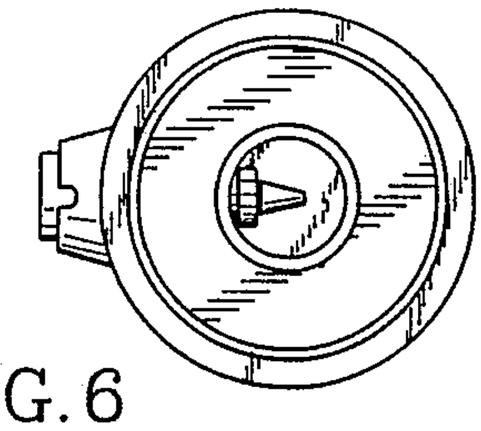

FIG. 6

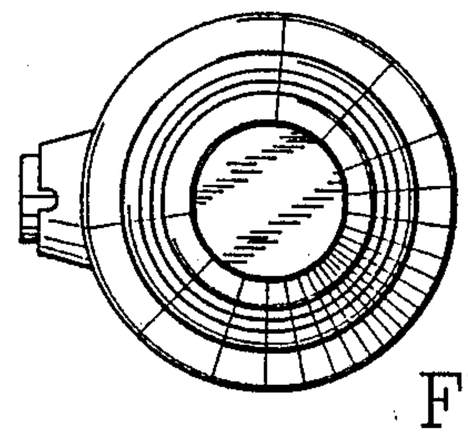

FIG. 7