United States Patent [19]

Mehra et al.

[11] **Patent Number: Des. 284,700**

[45] **Date of Patent: ** Jul. 15, 1986**

[54] **TEST TUBE RACK**

[75] Inventors: **Ravinder C. Mehra,** Fairport; **Richard A. Leoncavallo,** Pittsford, both of N.Y.

[73] Assignee: **Sybron Corporation,** Rochester, N.Y.

[**] Term: **14 Years**

[21] Appl. No.: **550,575**

[22] Filed: **Nov. 10, 1983**

[52] **U.S. Cl.** **D24/32**

[58] **Field of Search** D24/32, 31; 422/104, 422/102; 435/DIG. 809, 287; 211/72, 74

[56] **References Cited**

U.S. PATENT DOCUMENTS

D. 265,126	6/1982	Beall	D24/32
3,604,566	9/1971	Rem et al.	D24/32 X
4,407,958	10/1983	DeGraff, Jr.	D24/32 X

Primary Examiner—A. Hugo Word
Assistant Examiner—Stella Reid
Attorney, Agent, or Firm—Robert A. Gerlach; Frank Pincelli; John B. Mason

[57] **CLAIM**

The ornamental design for a test tube rack, as shown and described.

DESCRIPTION

FIG. **1** is a modified perspective view of a test tube rack showing my new design;
FIG. **2** is a top plan view thereof;
FIG. **3** is a bottom plan view thereof;
FIG. **4** is a front elevational view thereof;
FIG. **5** is a rear elevational view thereof;
FIG. **6** is a right side elevational view thereof;
FIG. **7** is a left side elevational view thereof;
FIG. **8** is a right side elevational view of an alternate embodiment of my new design, showing a single side support between the top and intermediate tiers of the test tube rack, all other sides being the same as those shown in FIGS. 1–5; and,
FIG. **9** is a right side elevational view of an alternate embodiment of my new design, showing a tab suspended in the space between the two side supports illustrated in FIG. **6,** all other sides being the same as those shown in FIGS. **1–5.**

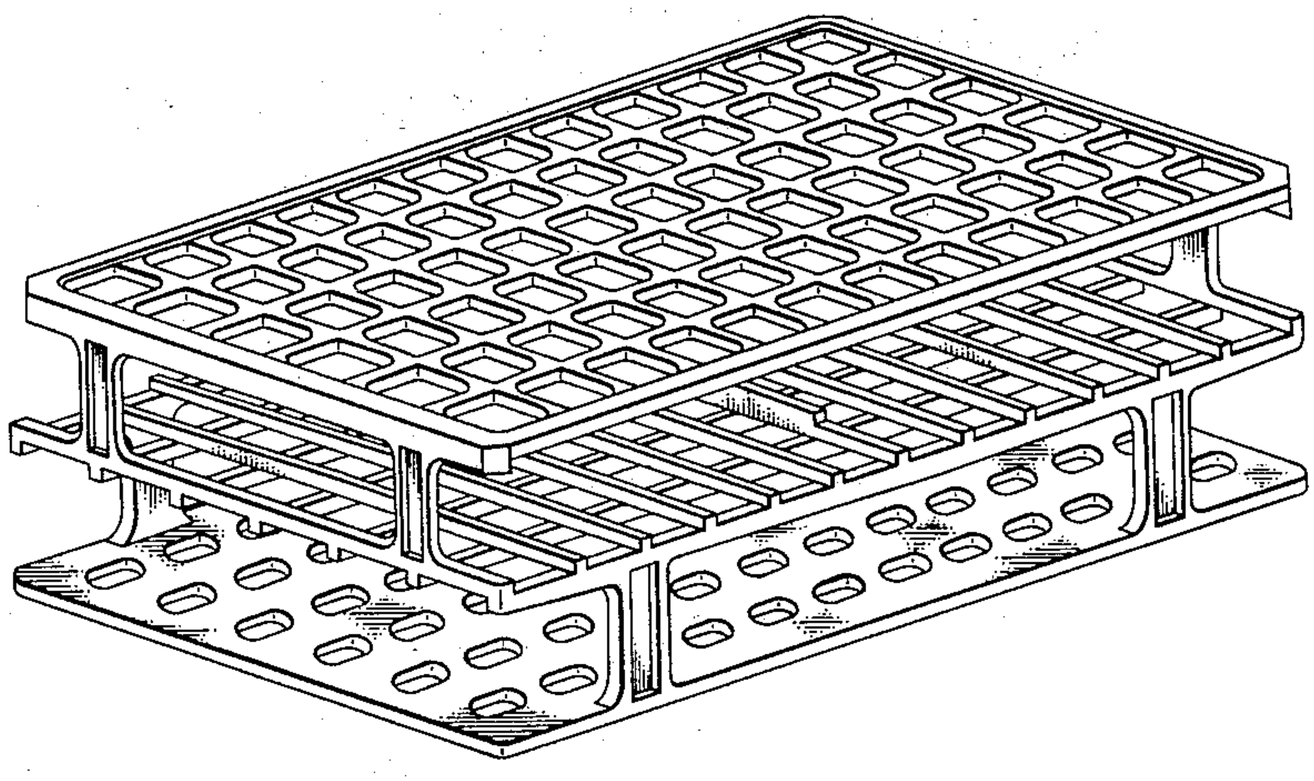

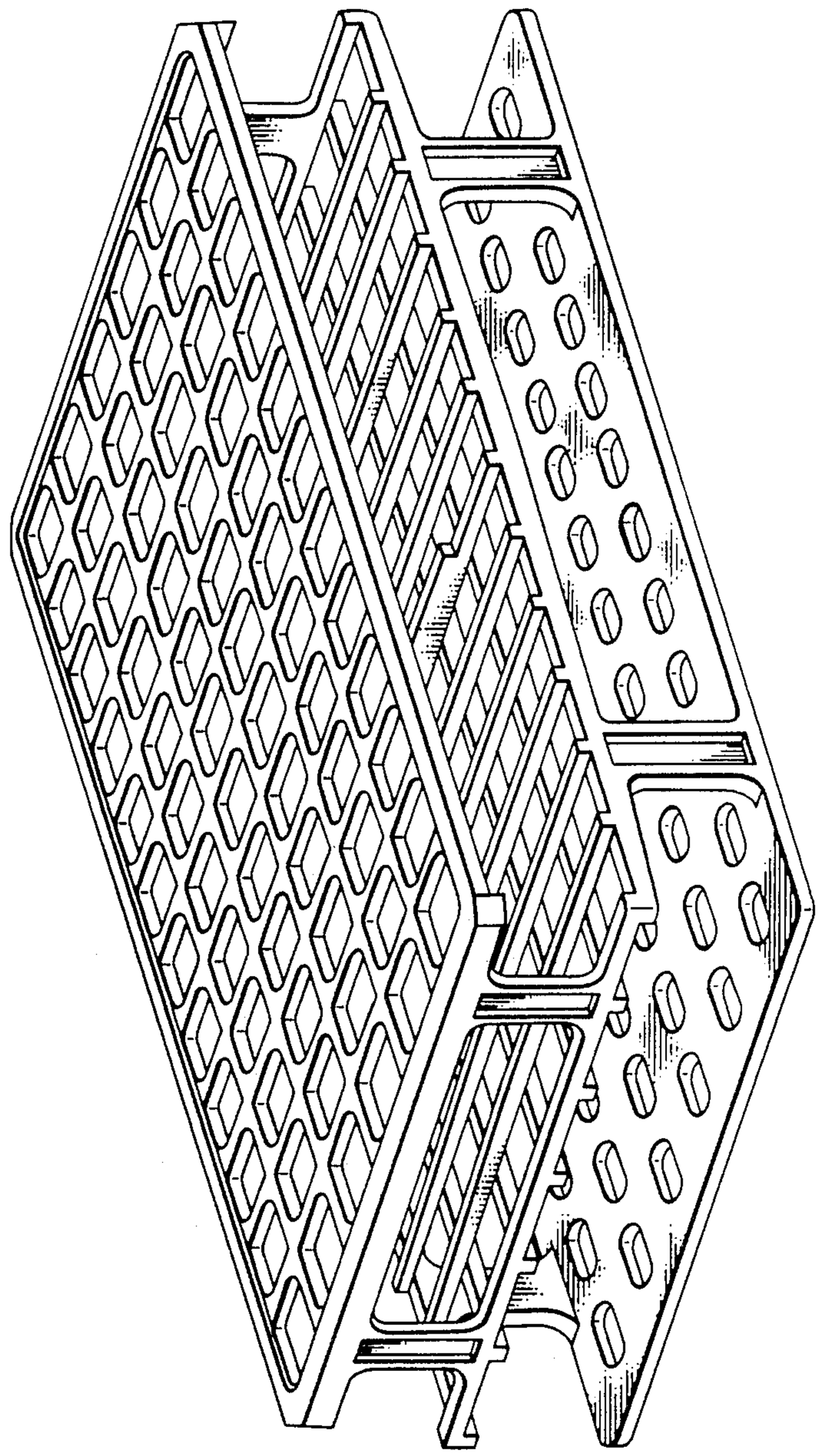

FIG. 1

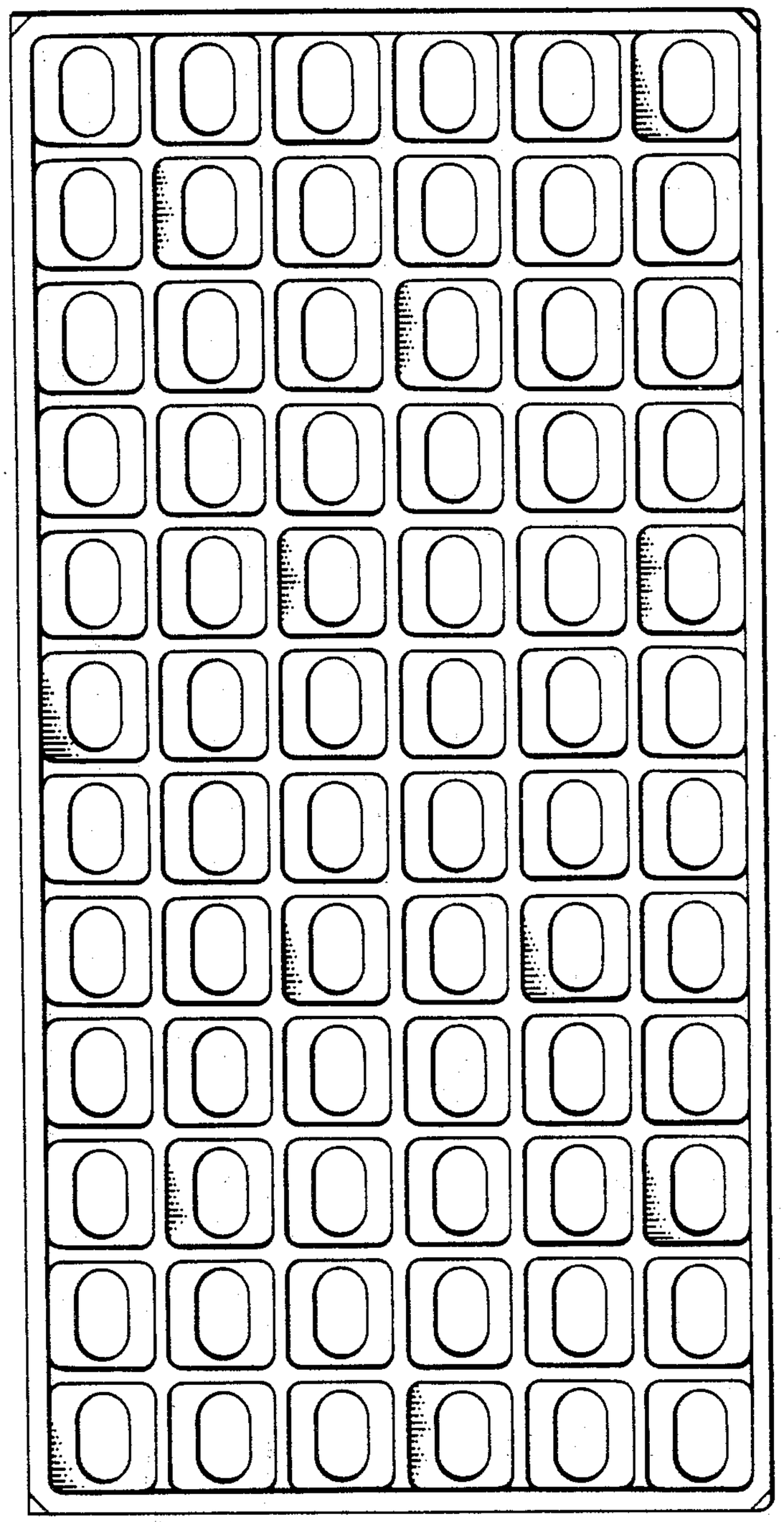

FIG. 2

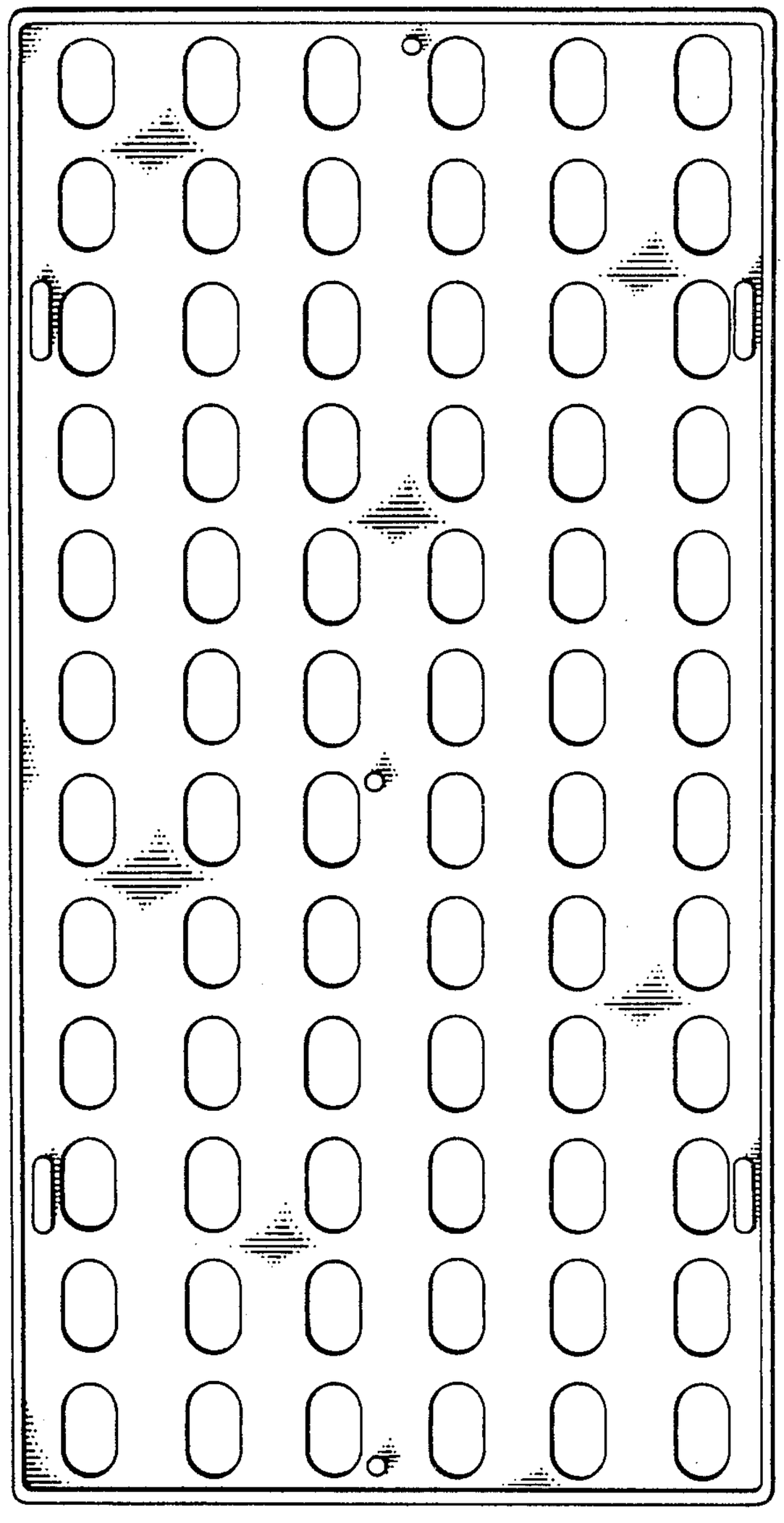

FIG. 3

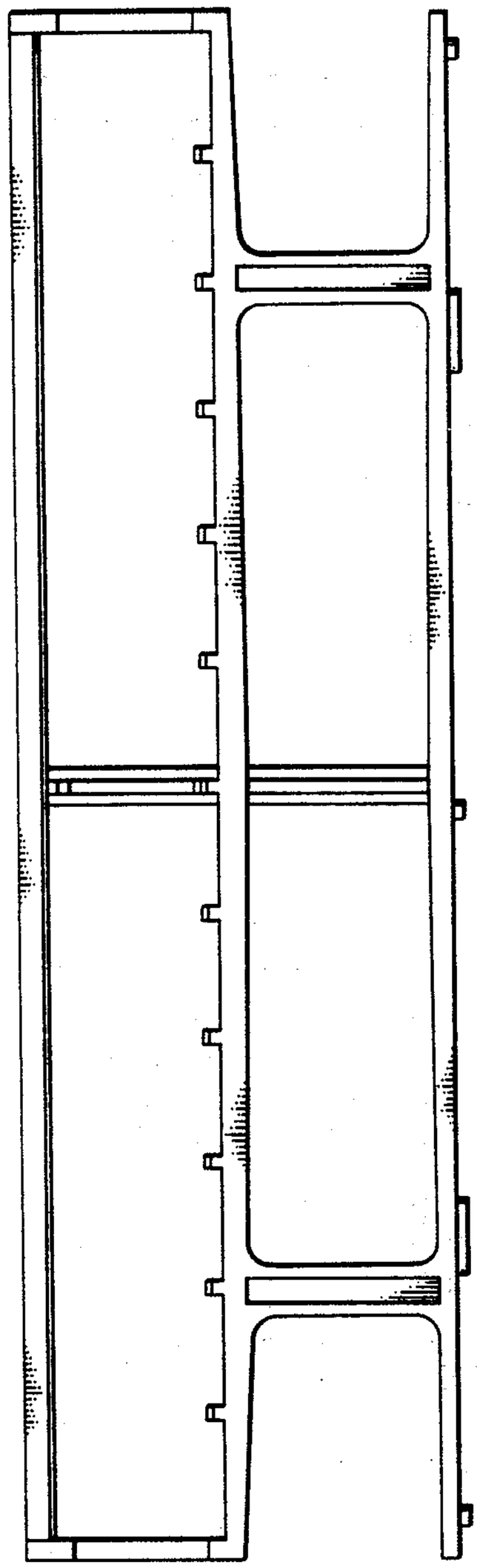

FIG. 4

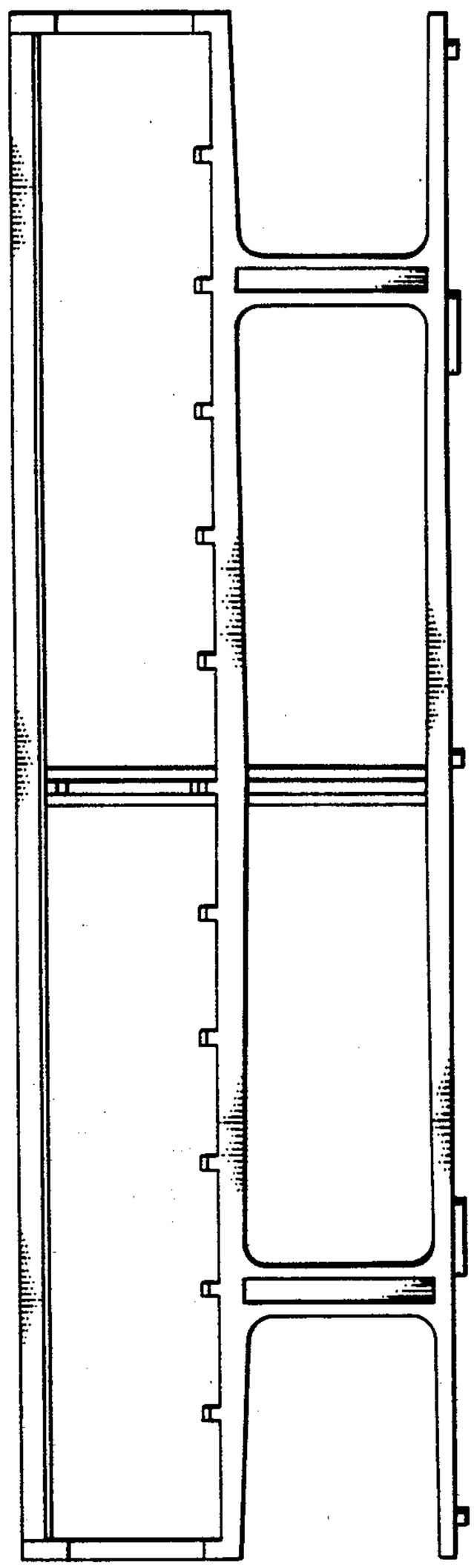

FIG. 5

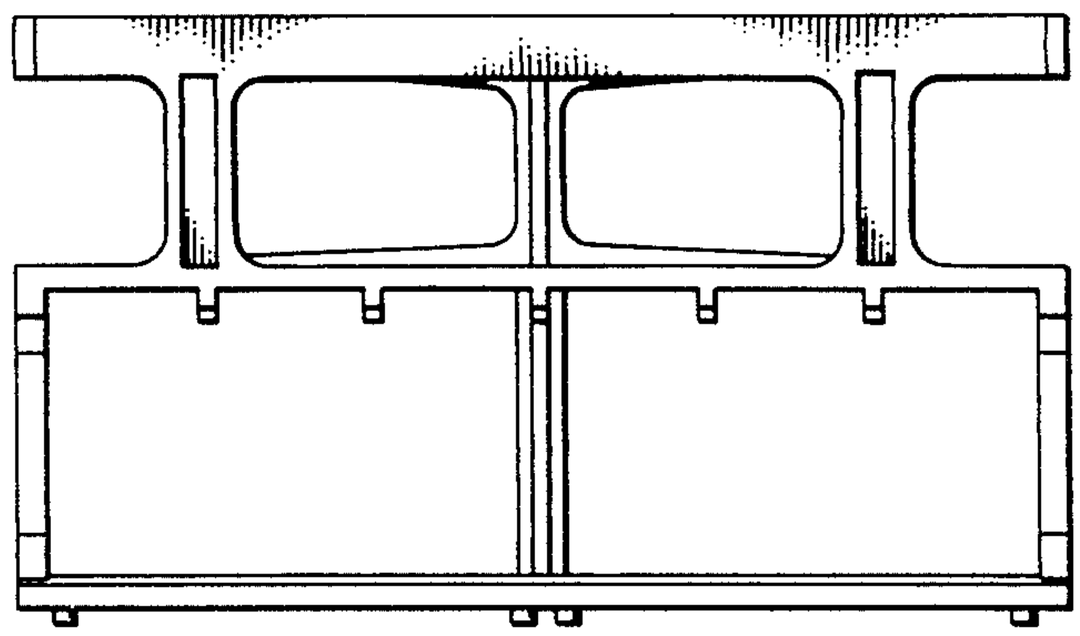

FIG. 6

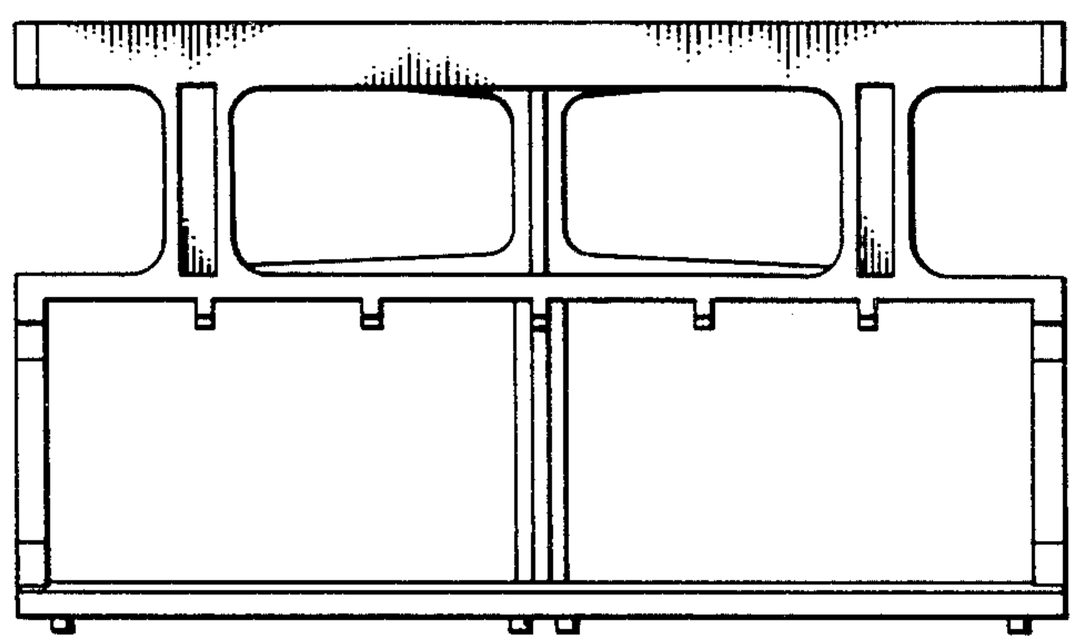

FIG. 7

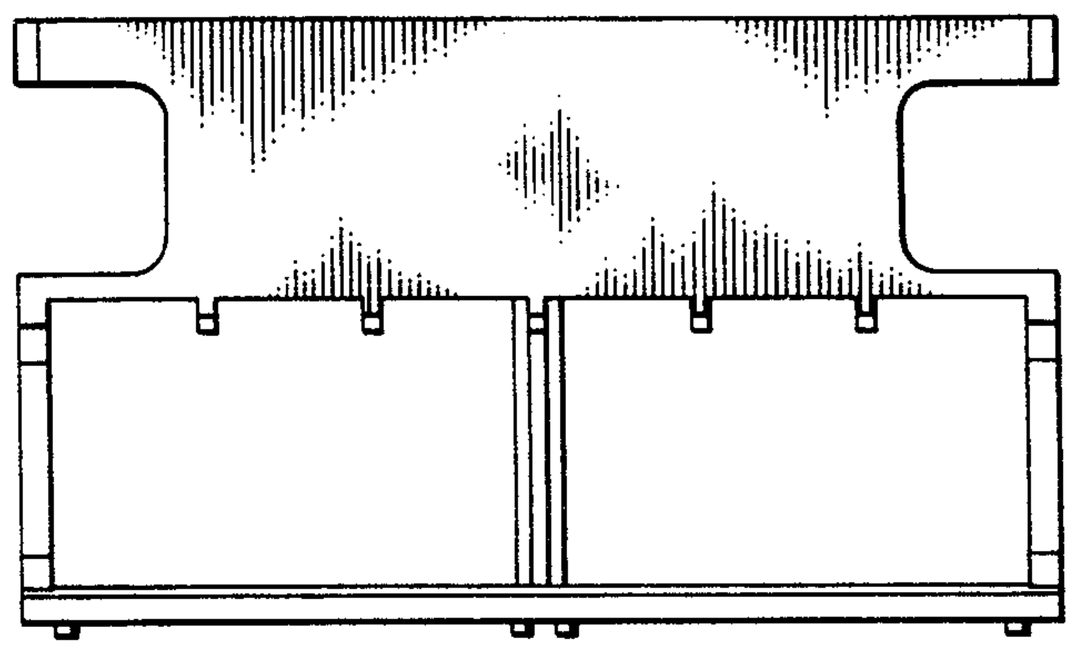

FIG. 8

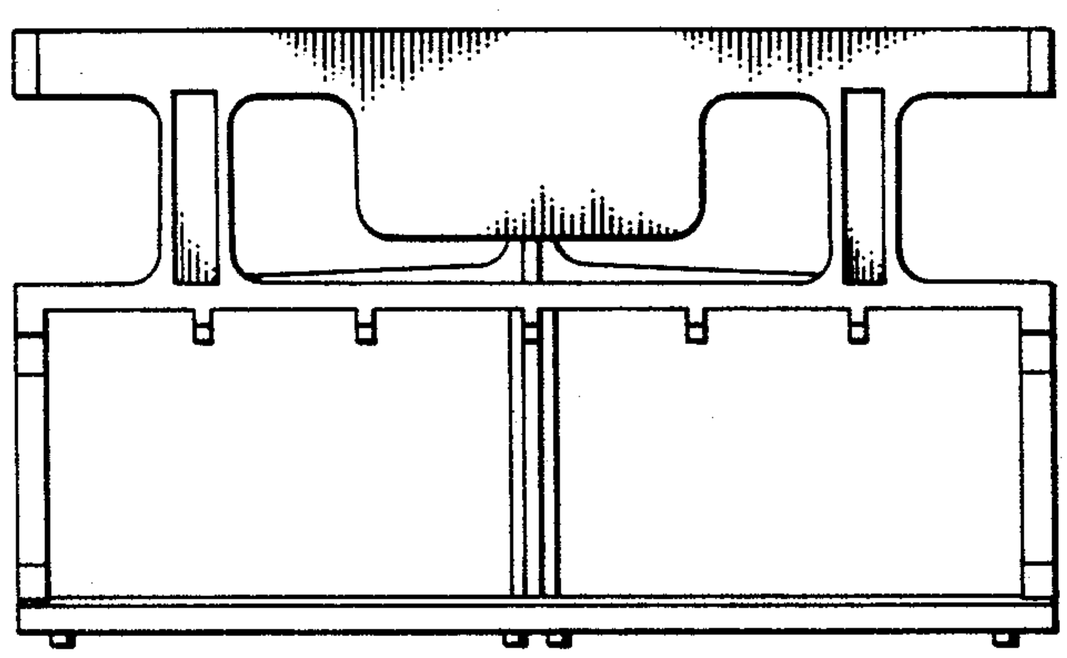

FIG. 9