United States Patent [19]

Tortolani

[11] **Patent Number: Des. 281,061**

[45] **Date of Patent: ** Oct. 22, 1985**

[54] **TAILGATE BUMPER**

[76] Inventor: **Richard J. Tortolani,** 714 Centerville Rd., Warwick, R.I. 02886

[**] Term: **14 Years**

[21] Appl. No.: **470,090**

[22] Filed: **Feb. 28, 1983**

[52] **U.S. Cl.** **D12/167;** D25/74; D25/79; D12/190

[58] **Field of Search** ..... D12/167, 190; D25/74, D25/79; 296/50, 57 R; 293/1, 142

[56] **References Cited**

U.S. PATENT DOCUMENTS

3,900,118 8/1975 Kellogg ..... 296/57 R

FOREIGN PATENT DOCUMENTS

57155 8/1982 European Pat. Off. 293/142

OTHER PUBLICATIONS

J. C. Whitney Catalog No. 414B, ©1981, p. 46, Tailgate Guard For Pickup Trucks, top right side of page.

Primary Examiner—James M. Gandy
Attorney, Agent, or Firm—Robert J. Doherty

[57] **CLAIM**

The ornamental design for a tailgate bumper, as shown and described.

DESCRIPTION

FIG. **1** is a top perspective view showing my new design for a tailgate bumper, the dotted line representation showing the environment in which the device is utilized and forms no part of the design;
FIG. **2** is a side elevational view of the top portion thereof to an enlarged scale;
FIG. **3** is a rear elevational view of FIG. **2** on a reduced scale;
FIG. **4** is a front elevational view of FIG. **2** on a reduced scale;
FIG. **5** is a top plan view of FIG. **2** on a reduced scale;
FIG. **6** is a bottom plan view of FIG. **2** on a reduced scale;
FIG. **7** is a side elevational view of the bottom portion thereof to an enlarged scale;
FIG. **8** is a top plan view of FIG. **7** on a reduced scale;
FIG. **9** is a bottom plan view of FIG. **7** on a reduced scale;
FIG. **10** is a rear elevational view of FIG. **7** on a reduced scale; and
FIG. **11** is a front elevational view of FIG. **7** on a reduced scale.

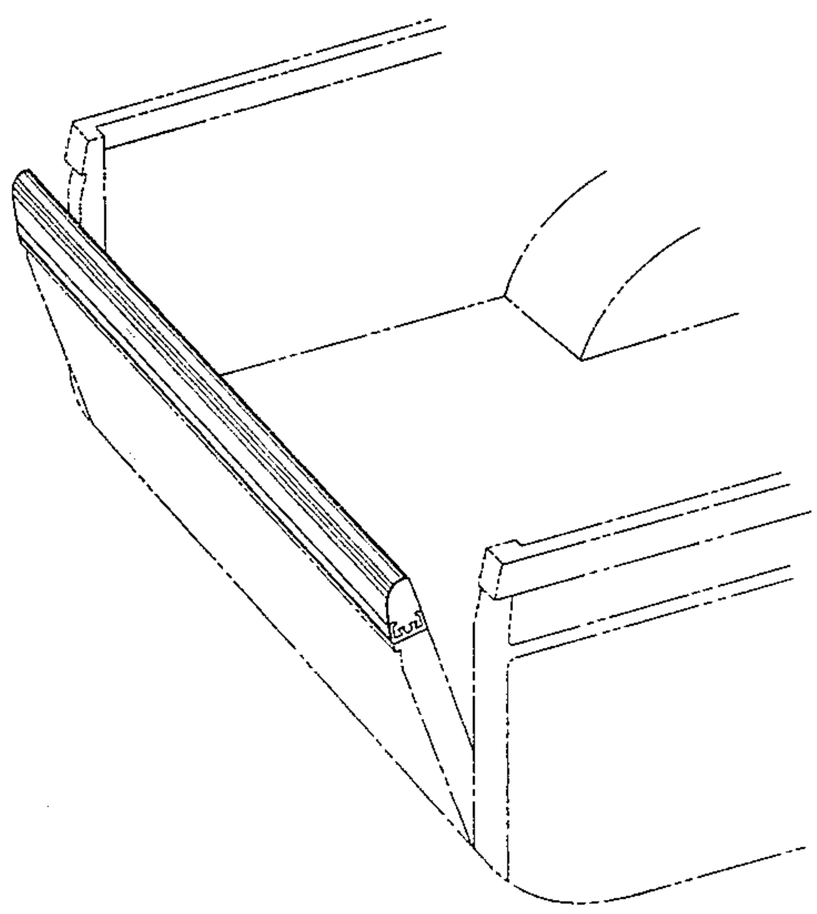

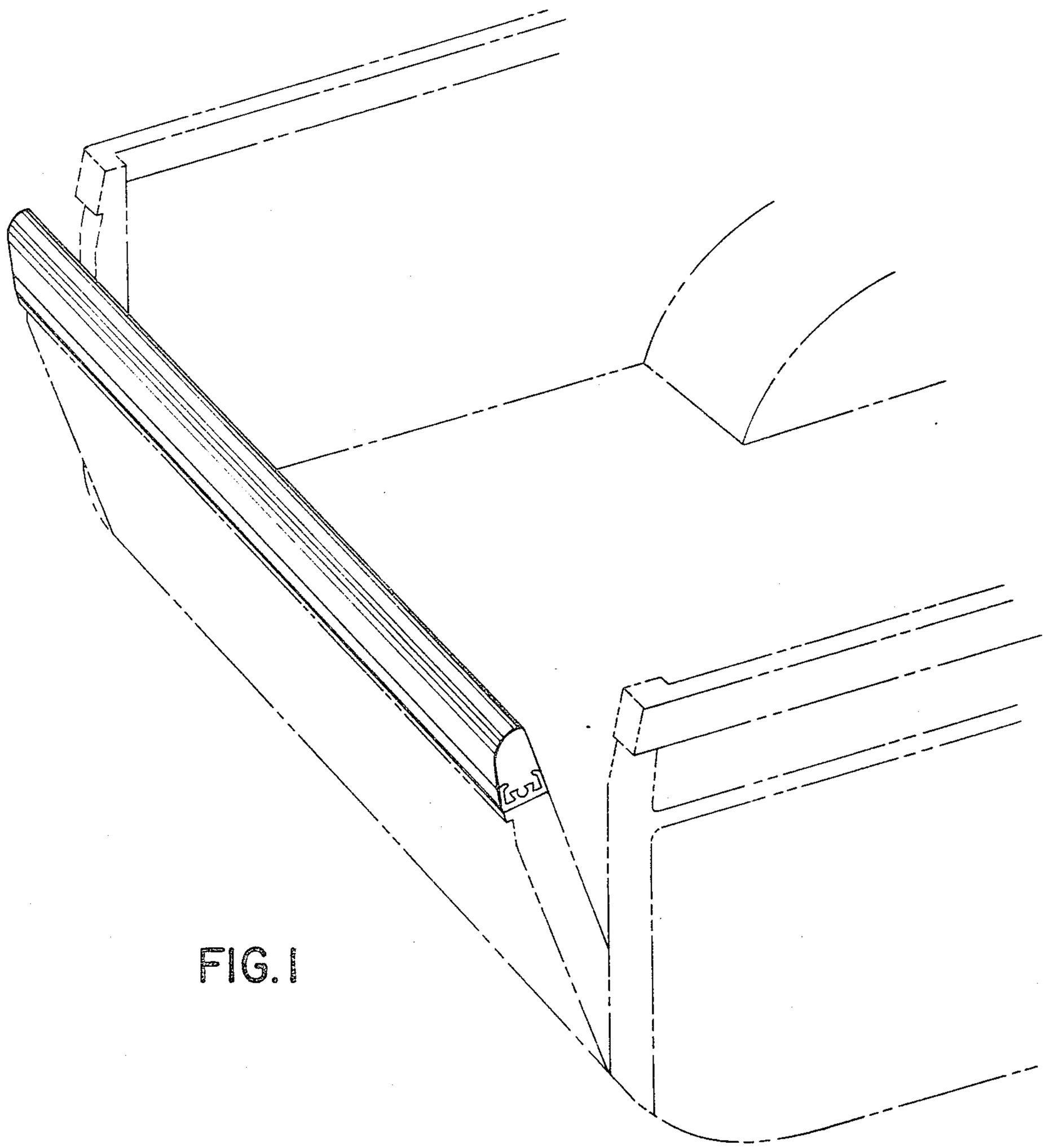

FIG. 1

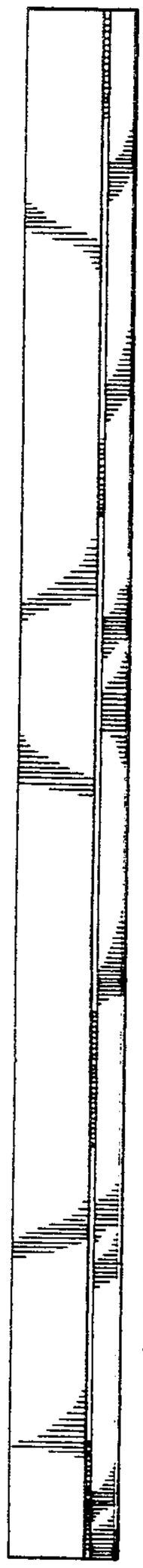

FIG. 3

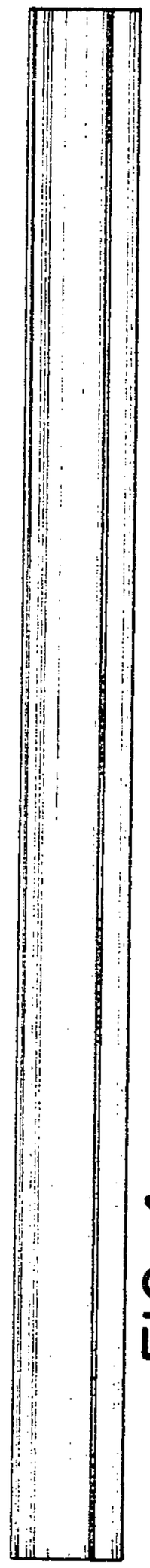

FIG. 4

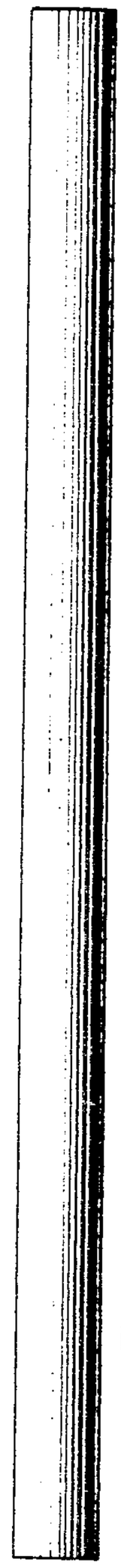

FIG. 5

FIG. 6

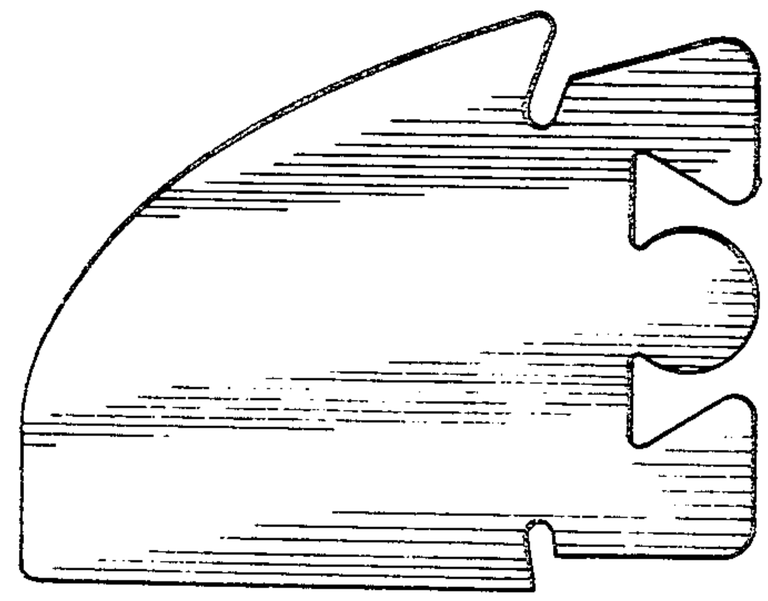

FIG. 2

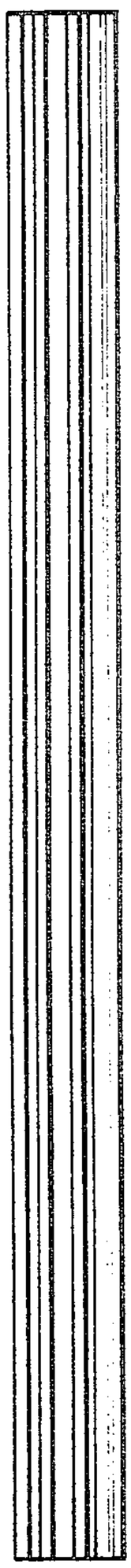

FIG. 8

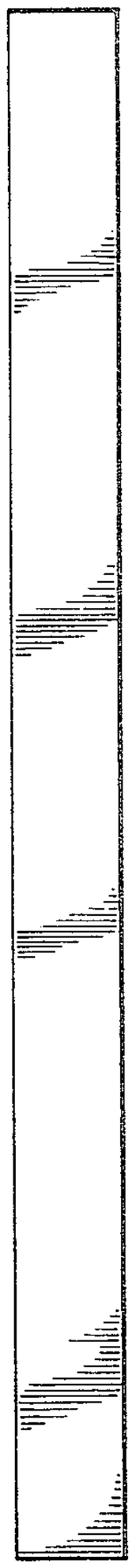

FIG. 9

FIG. 10

FIG. 11

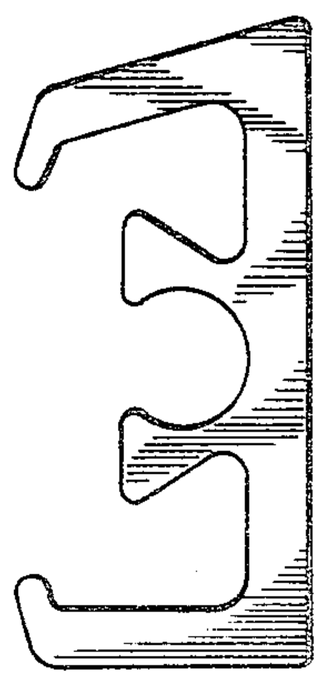

FIG. 7