United States Patent [19]

Kojima et al.

[11] **Patent Number: Des. 278,617**

[45] **Date of Patent: ** Apr. 30, 1985**

[54] **VEHICLE TIRE**

[75] Inventors: **Hiroshi Kojima; Misao Kawabata,** both of Tokyo; **Masataka Yamaoka,** Saitama; **Masashiro Moriya,** Tokyo, all of Japan

[73] Assignee: **Bridgestone Tire Co., Ltd.,** Tokyo, Japan

[**] Term: **14 Years**

[21] Appl. No.: **456,456**

[22] Filed: **Jan. 7, 1983**

[30] **Foreign Application Priority Data**

Jul. 29, 1982 [JP] Japan 57-34004

[52] **U.S. Cl.** **D12/147**

[58] **Field of Search** ..... D12/141-143, D12/145-148, 134; 152/209 R, 209 A, 209 B, 209 D

[56] **References Cited**

U.S. PATENT DOCUMENTS

D. 64,833 6/1924 Belden D12/146
D. 204,653 5/1966 Busch et al. D12/141
D. 265,302 7/1982 Kojima et al. D12/147
4,327,792 5/1982 Landers ..... 152/209 R

OTHER PUBLICATIONS

Tire & TBA Review, 9/58, p. 43, Corduroy Delux "14" Tire.

1982 Tread Design Guide, p. 58, Pirelli P77 Tire, bottom center of page.

1982 Tread Design Guide, p. 59, Pirelli P7 & P7 Rally Tire, second row down from top, left side of page.

Primary Examiner—James M. Gandy

Attorney, Agent, or Firm—Sughrue, Mion, Zinn, Macpeak & Seas

[57] **CLAIM**

The ornamental design for a vehicle tire, as shown and described.

DESCRIPTION

FIG. **1** is a perspective view of a vehicle tire showing our new design, it being understood that the tread pattern is repeated throughout the circumference of the tire, the opposite side being substantially the same as that shown;

FIG. **2** is an end elevational view thereof; and

FIG. **3** is a side elevational view thereof.

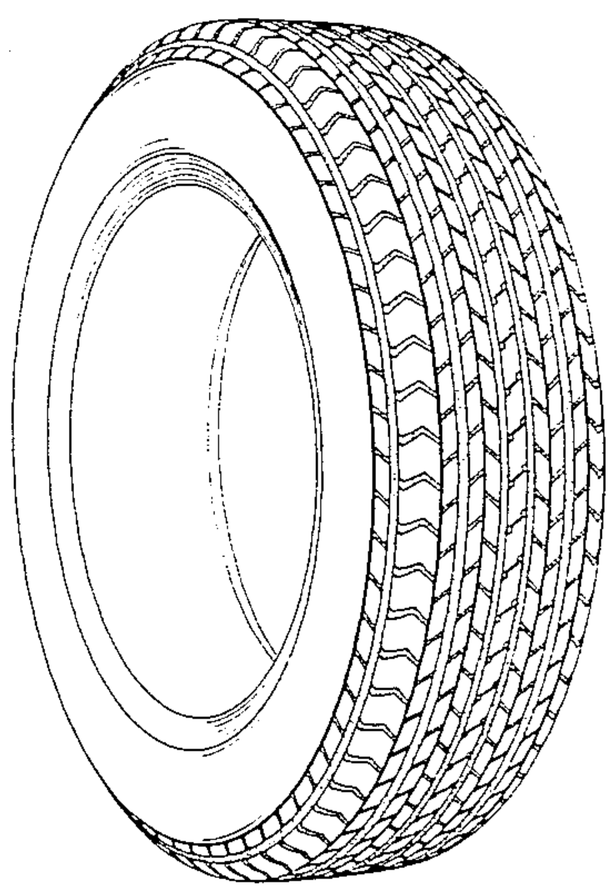

FIG. 2

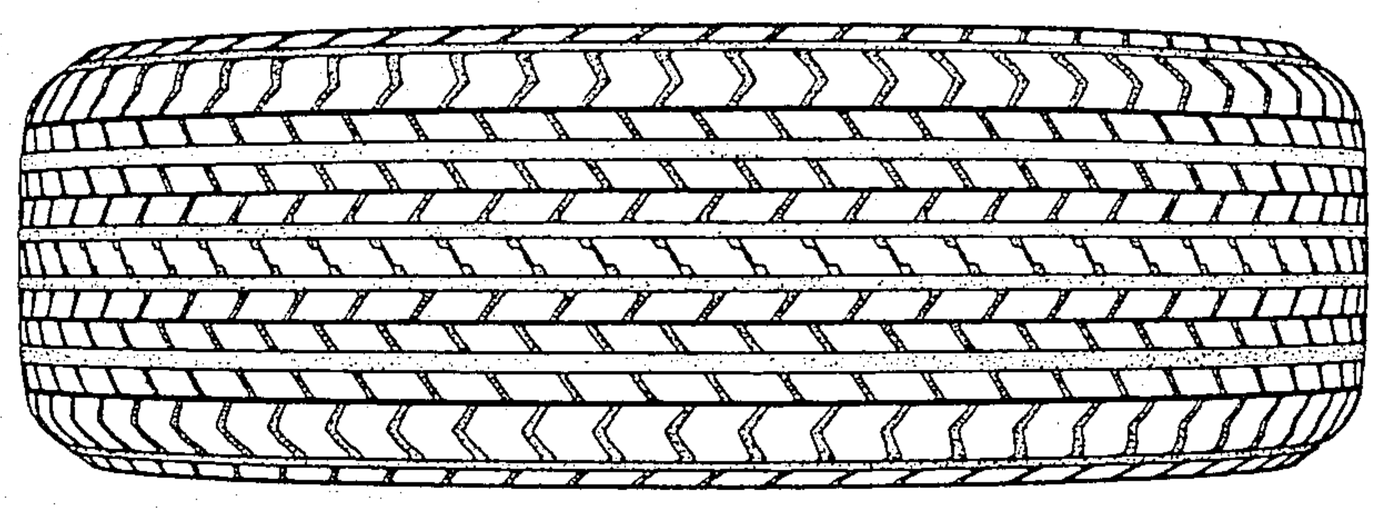

FIG. 1

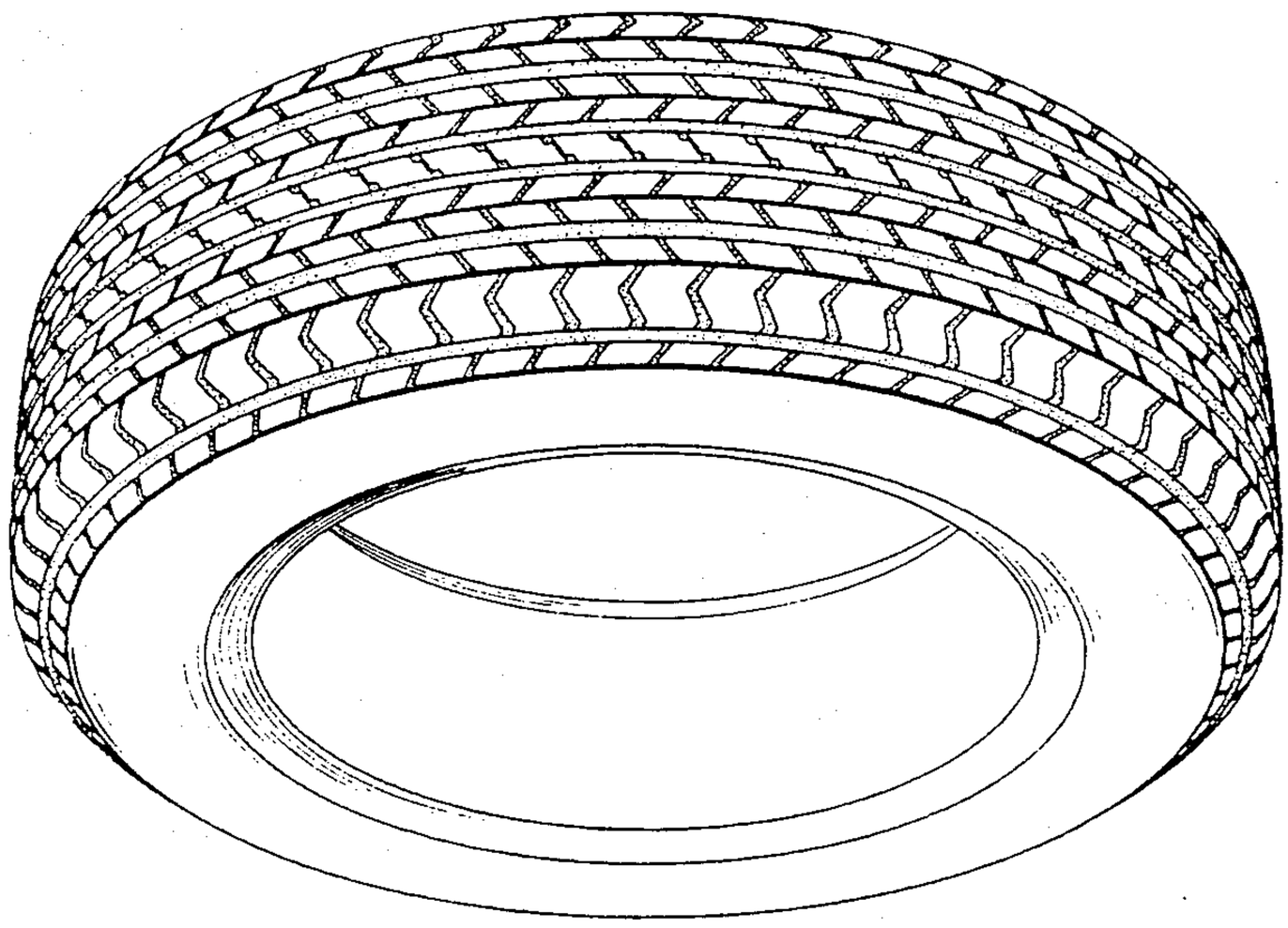
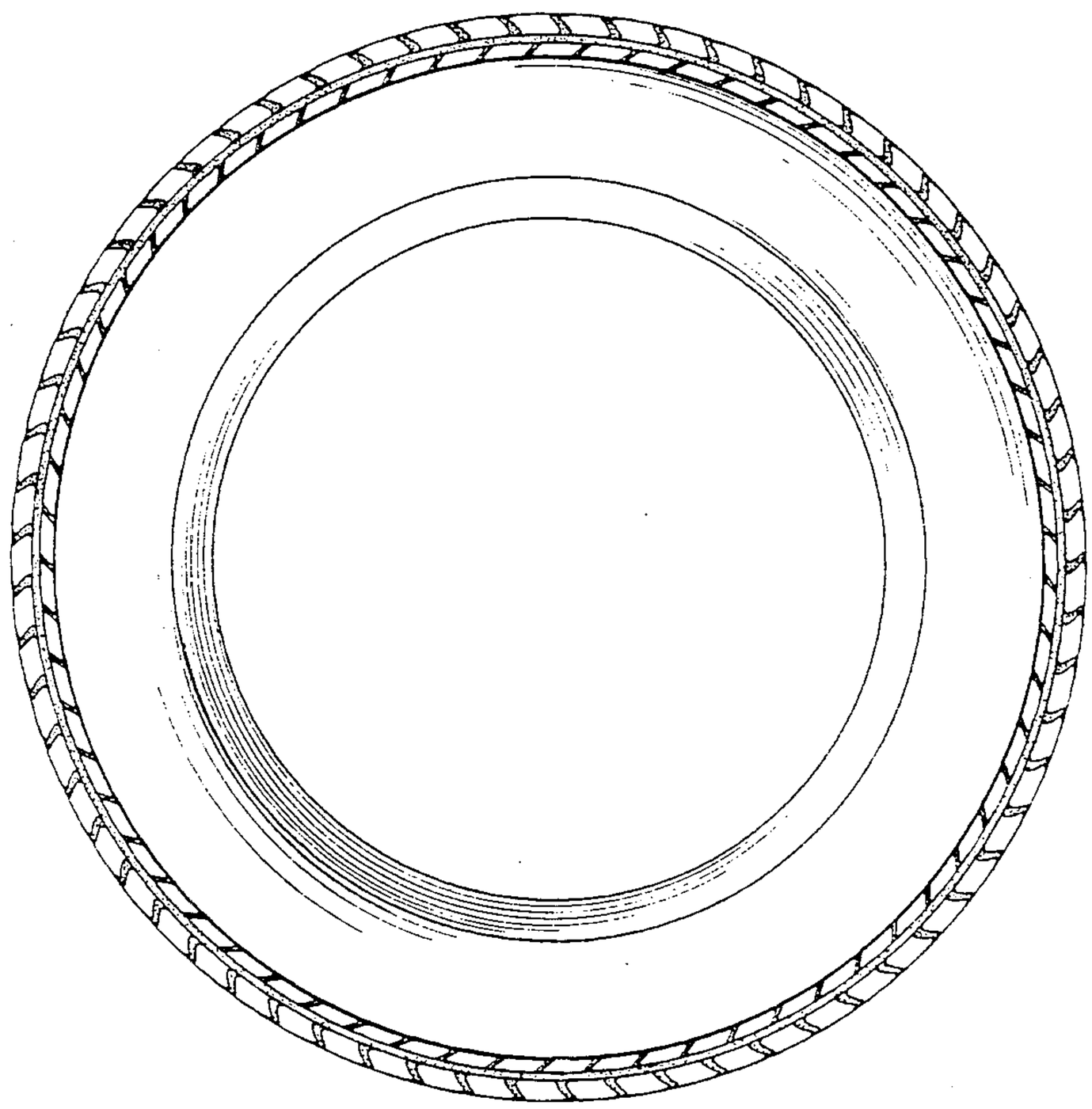
FIG. 3