United States Patent [19]

Imada

[11] **Patent Number: Des. 277,407**

[45] **Date of Patent: ** Jan. 29, 1985**

[54] **OPERATING ASSEMBLY OF AN ENDOSCOPE**

[75] Inventor: **Michio Imada,** Kodaira, Japan

[73] Assignee: **Olympus Optical Company, Ltd.,** Japan

[**] Term: **14 Years**

[21] Appl. No.: **415,689**

[22] Filed: **Sep. 7, 1982**

[30] **Foreign Application Priority Data**

Mar. 8, 1982 [JP] Japan 57-9422

[52] **U.S. Cl.** **D24/17**

[58] **Field of Search** D24/17; 128/4, 5, 6, 128/8, 9

[56] **References Cited**

U.S. PATENT DOCUMENTS

4,078,555	3/1978	Takahashi	128/4
4,168,702	9/1979	Ohshiro	128/6
4,207,873	6/1980	Kruy	128/6
4,216,767	8/1980	Aoshiro	128/6
4,367,729	1/1983	Ogiu	128/6
4,416,268	11/1983	Hagino	128/6

Primary Examiner—A. Hugo Word
Assistant Examiner—Ruth C. Anderson
Attorney, Agent, or Firm—Ostrolenk, Faber, Gerb & Soffen

[57] **CLAIM**

The ornamental design for an operating assembly of an endoscope, as shown and described.

DESCRIPTION

FIG. **1** is a top, front, and left side perspective view of an operating assembly of an endoscope, showing my new design;
FIG. **2** is a rear, bottom, and right side perspective view thereof;
FIG. **3** is a front view thereof;
FIG. **4** is a rear view thereof;
FIG. **5** is a left side view thereof;
FIG. **6** is a right side view thereof;
FIG. **7** is a top view thereof; and
FIG. **8** is a bottom view thereof.
The portions shown in broken lines in FIGS. **1** and **2** have been disclosed for illustrative purposes only and form no part of the claimed design.

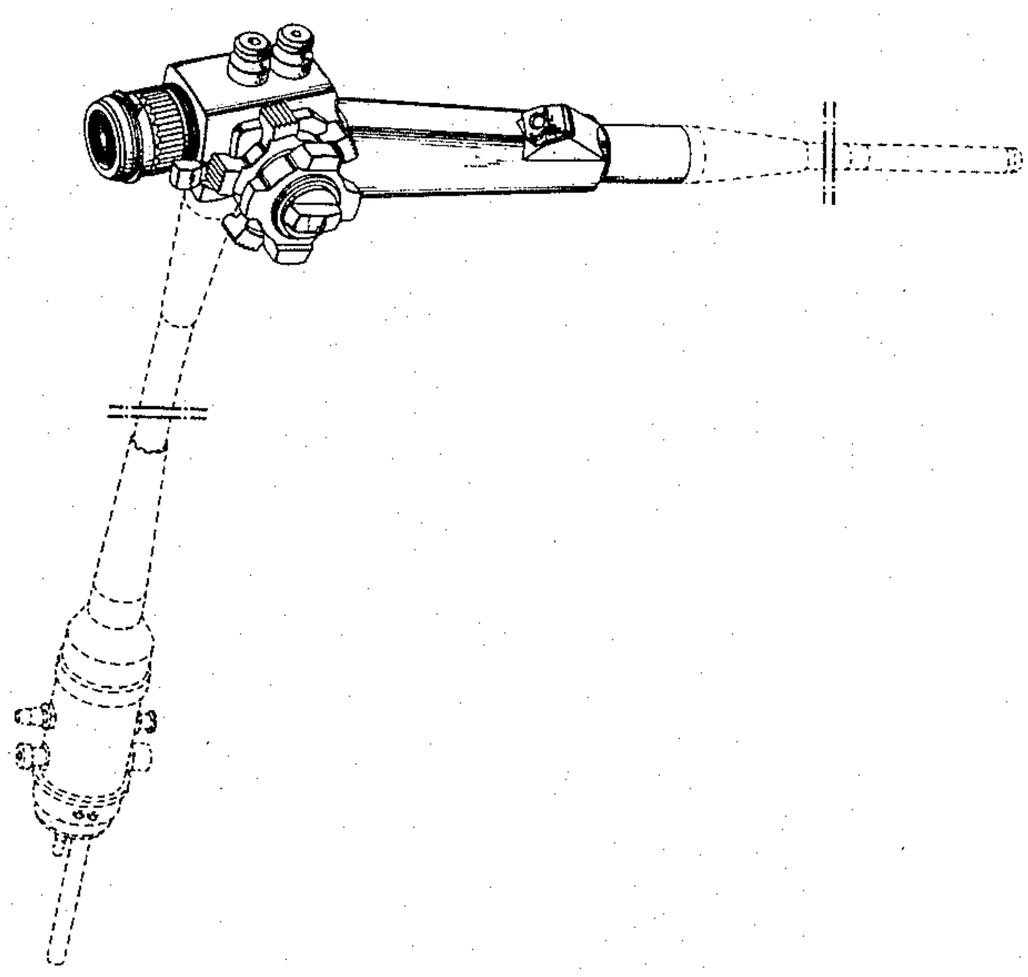

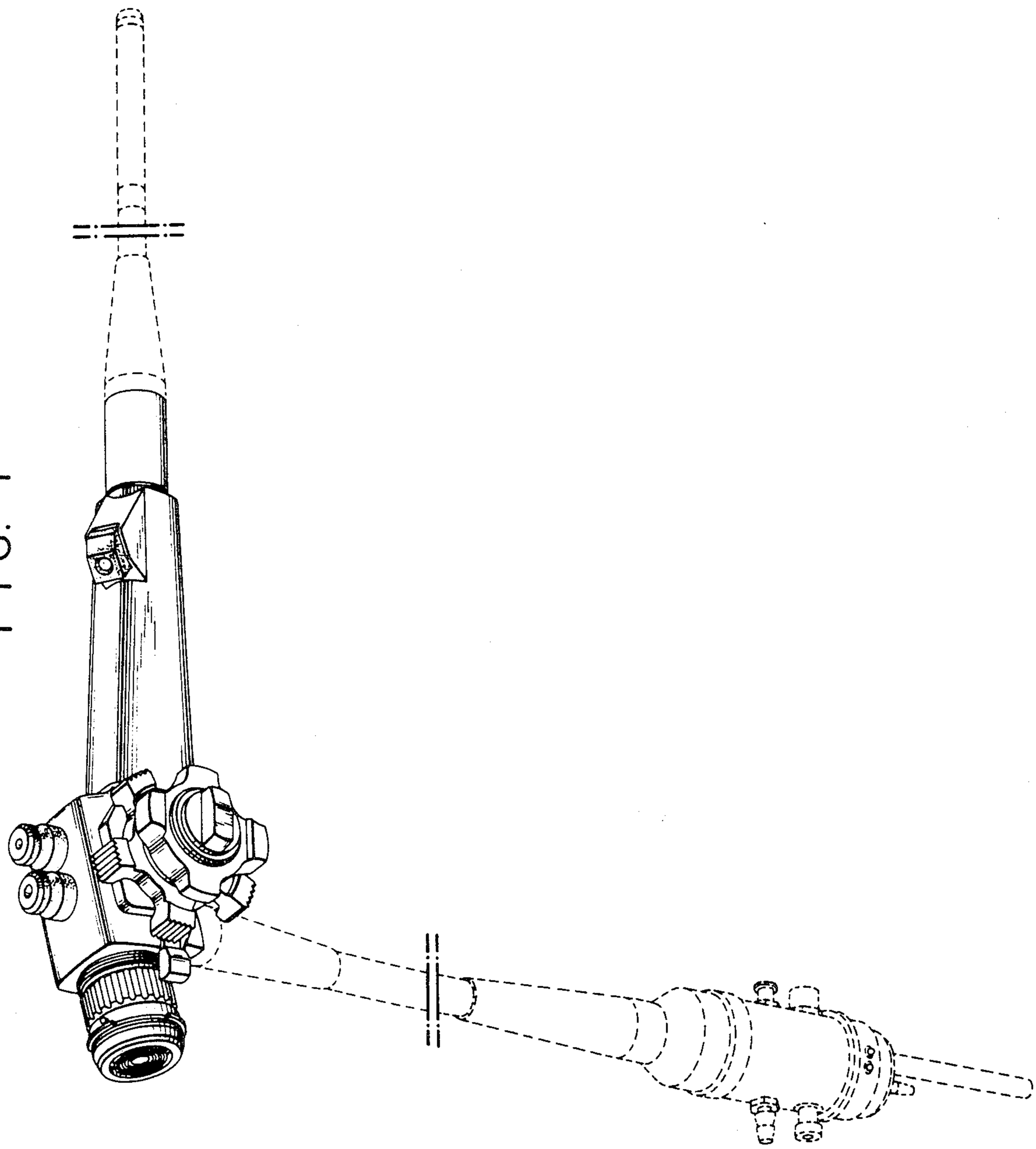

FIG. 1

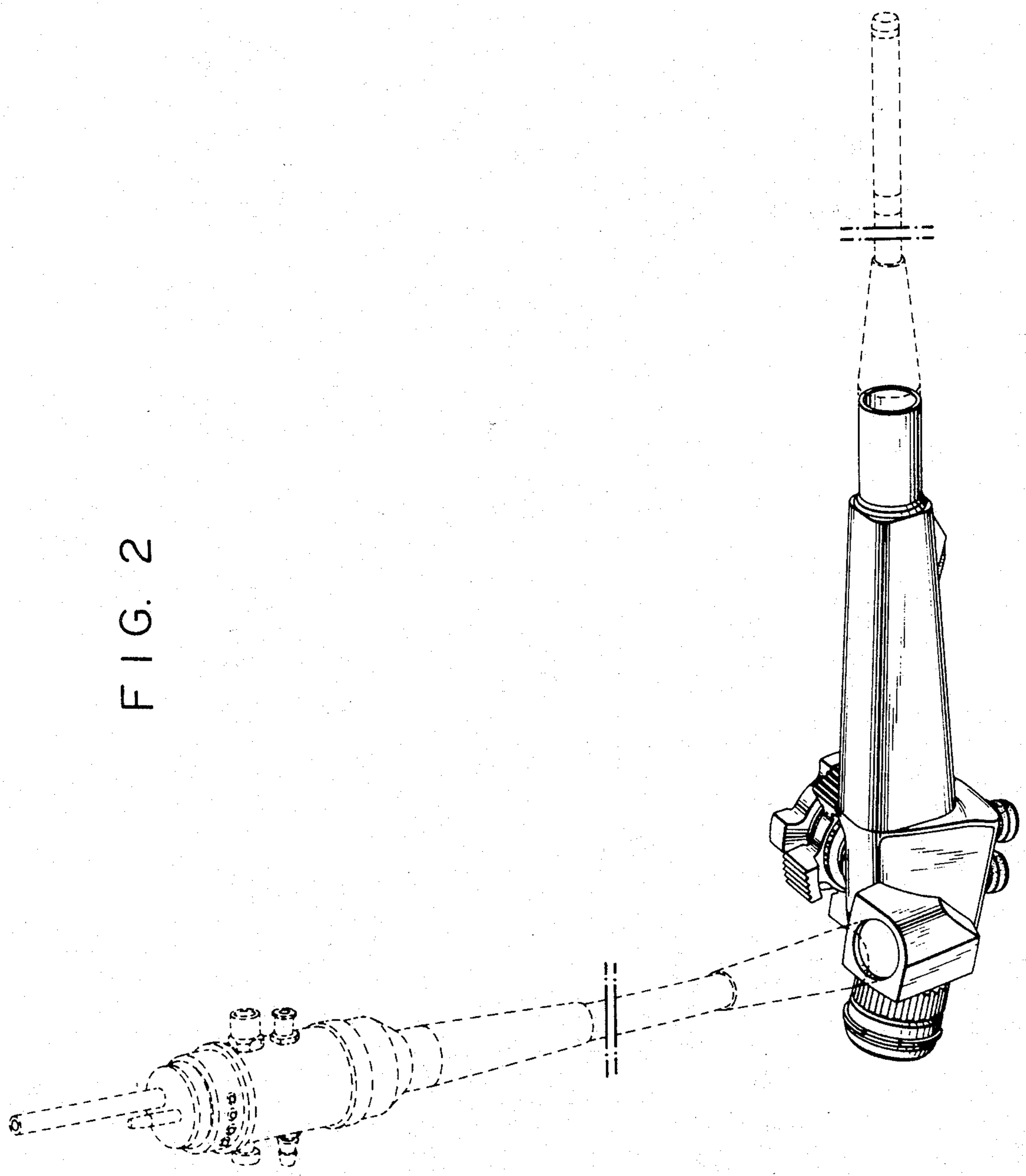

FIG. 2.

FIG. 3

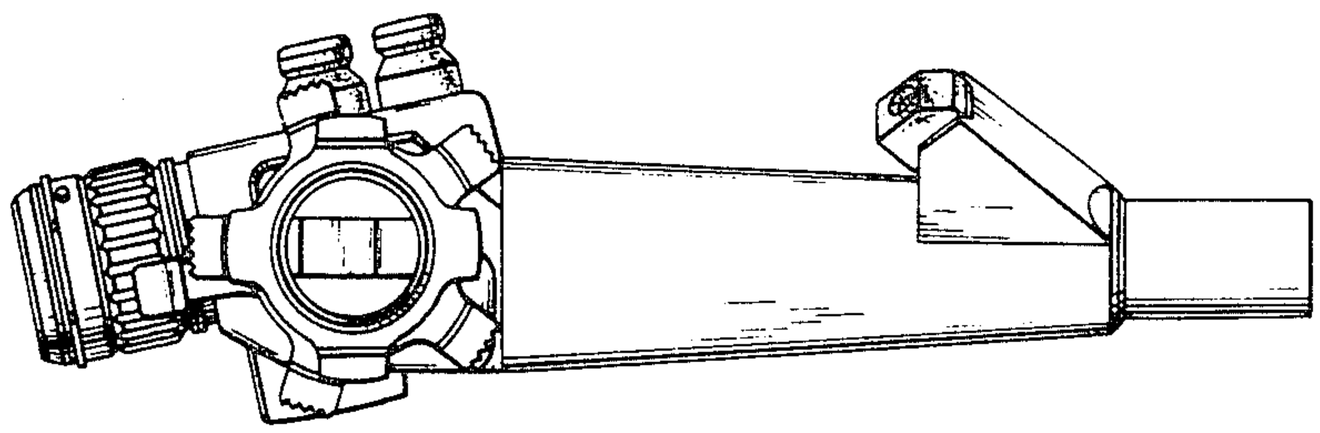

FIG. 4

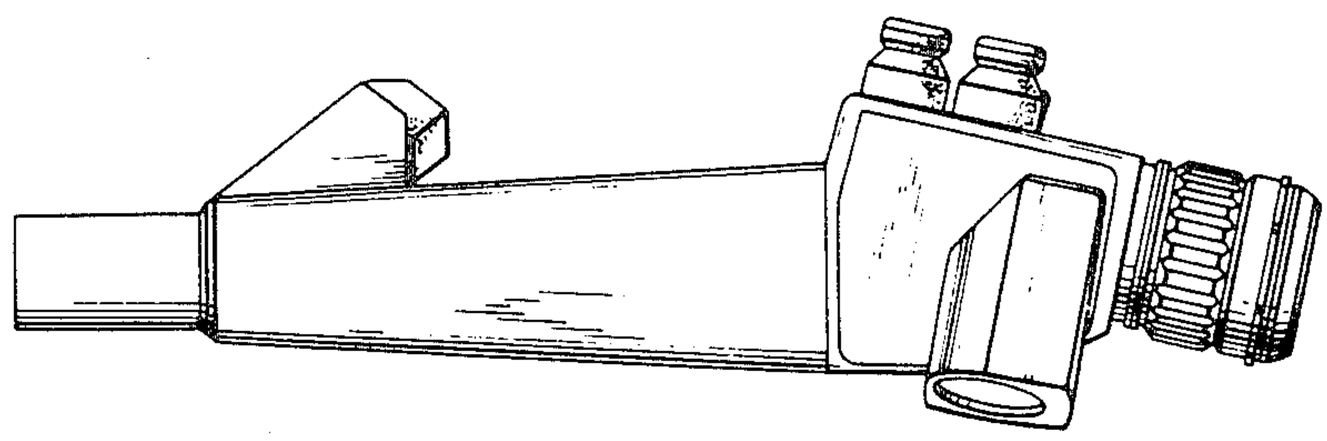

FIG. 5

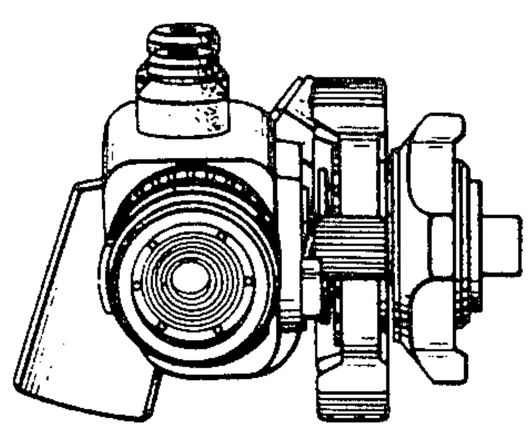

FIG. 6

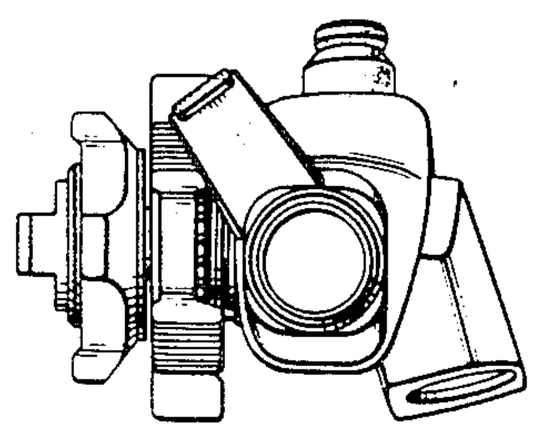

FIG. 7

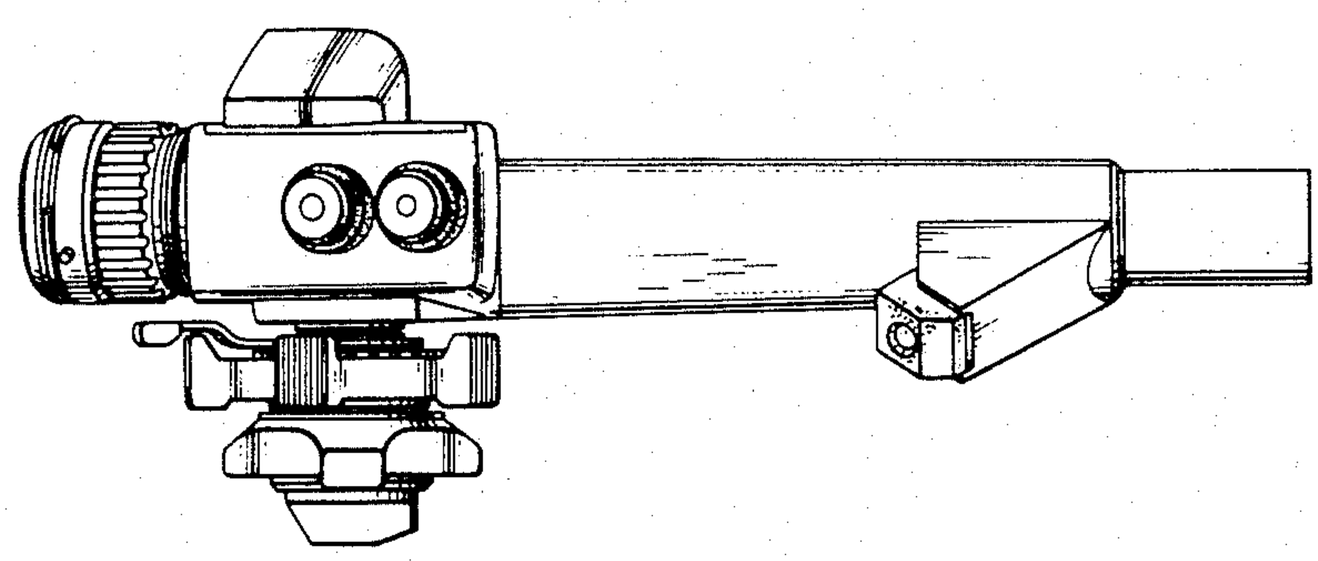
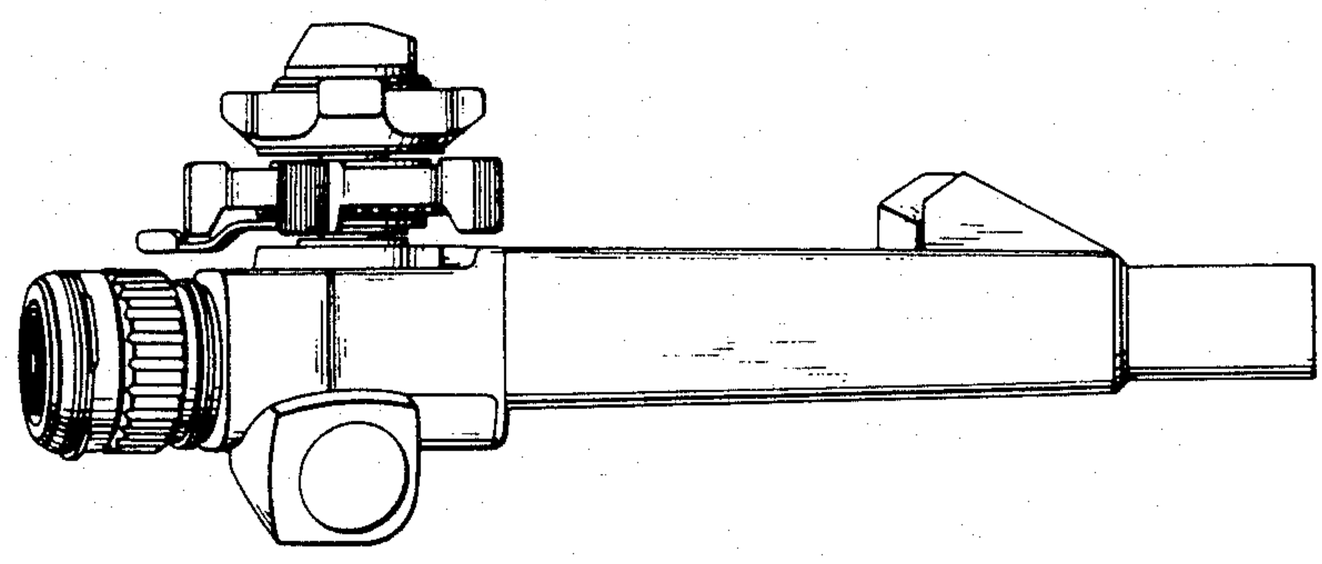
FIG. 8