United States Patent [19]

Shadwell

[11] **Patent Number: Des. 274,838**

[45] **Date of Patent: ** Jul. 24, 1984**

[54] **SYRINGE**

[75] Inventor: **David W. Shadwell,** Macclesfield, England

[73] Assignee: **Imperial Chemical Industries PLC,** London, England

[**] Term: **14 Years**

[21] Appl. No.: **328,431**

[22] Filed: **Dec. 7, 1981**

[30] **Foreign Application Priority Data**

Jun. 19, 1981 [GB] United Kingdom 1001081

[52] **U.S. Cl.** **D24/24**

[58] **Field of Search** 604/211, 224; D24/24, D24/99

[56] **References Cited**

U.S. PATENT DOCUMENTS

4,189,065	2/1980	Herold	604/211 X
4,194,505	3/1980	Schmitz	604/211 X
4,312,343	1/1982	Le Veen et al.	604/224 X

Primary Examiner—Bernard Ansher

Attorney, Agent, or Firm—Cushman, Darby & Cushman

[57] **CLAIM**

The ornamental design for a syringe, as shown.

DESCRIPTION

FIG. **1** is a perspective view from the plunger end showing my new design; and

FIG. **2** is a perspective view from the discharge end thereof.

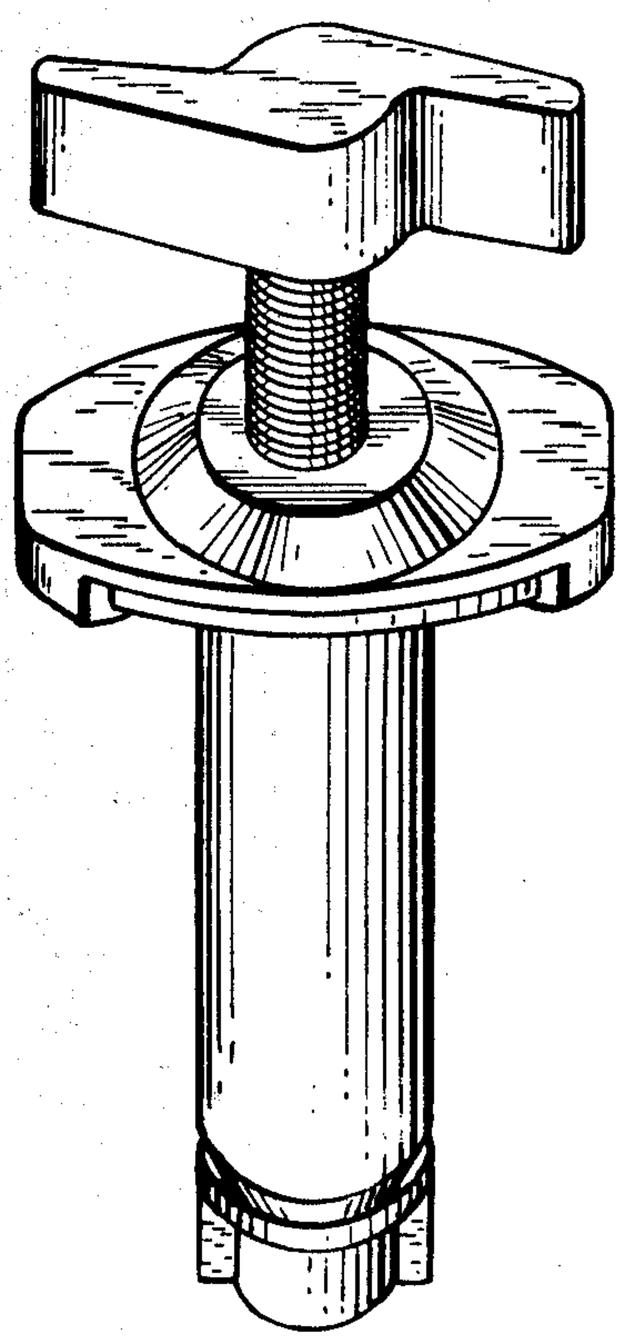

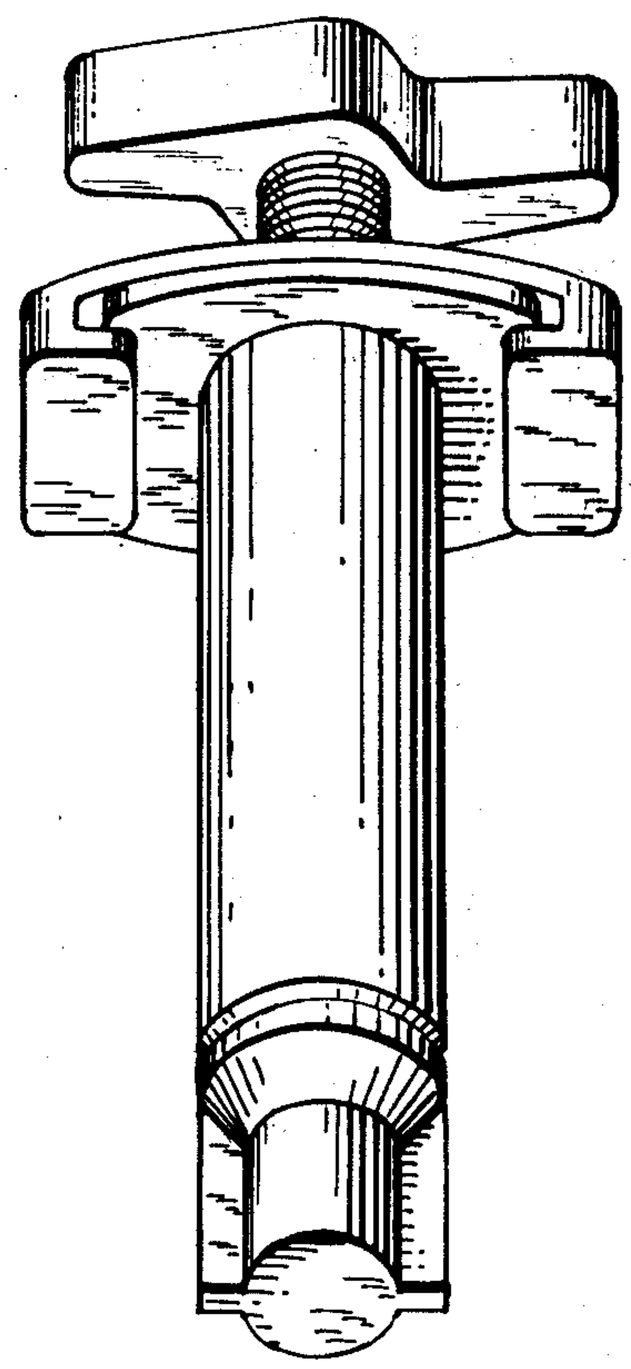

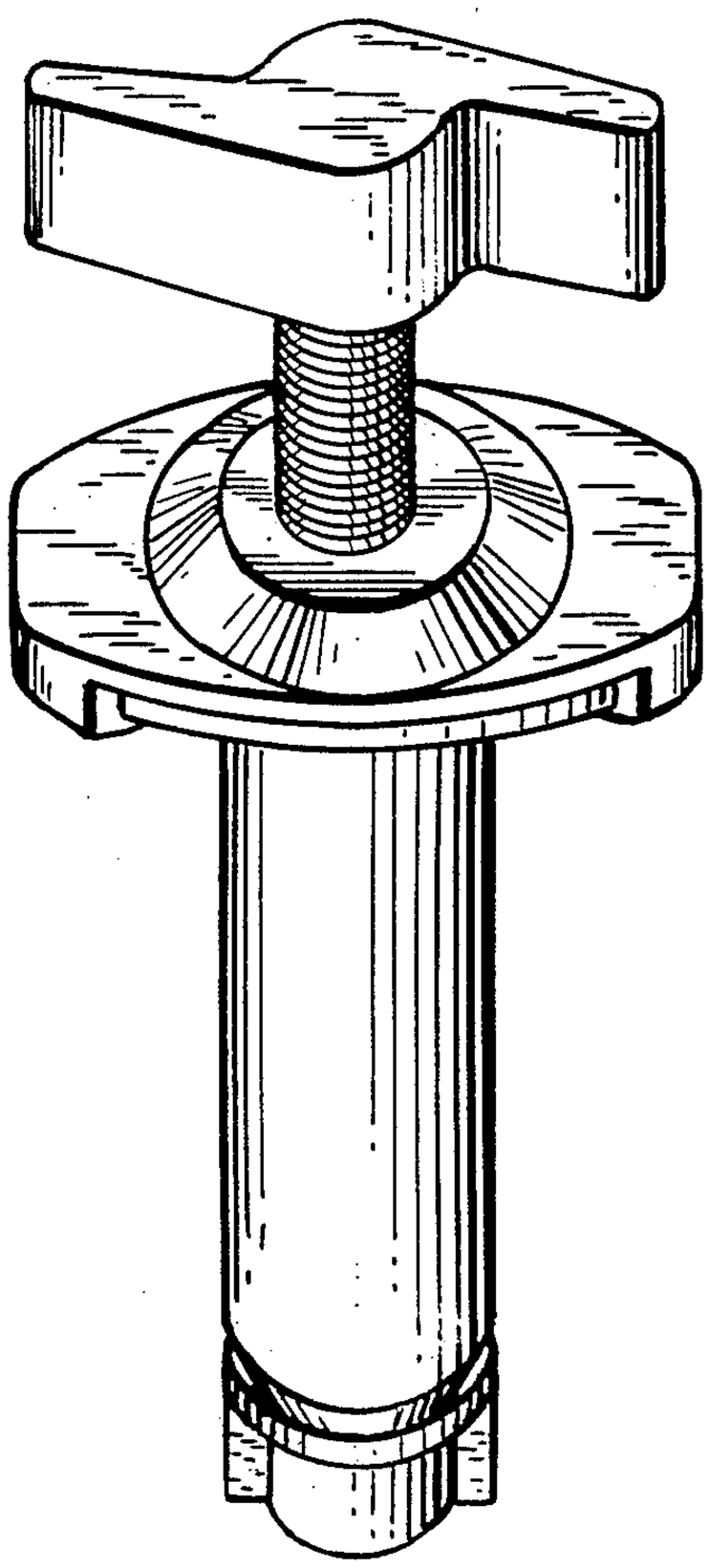

Fig. 1.

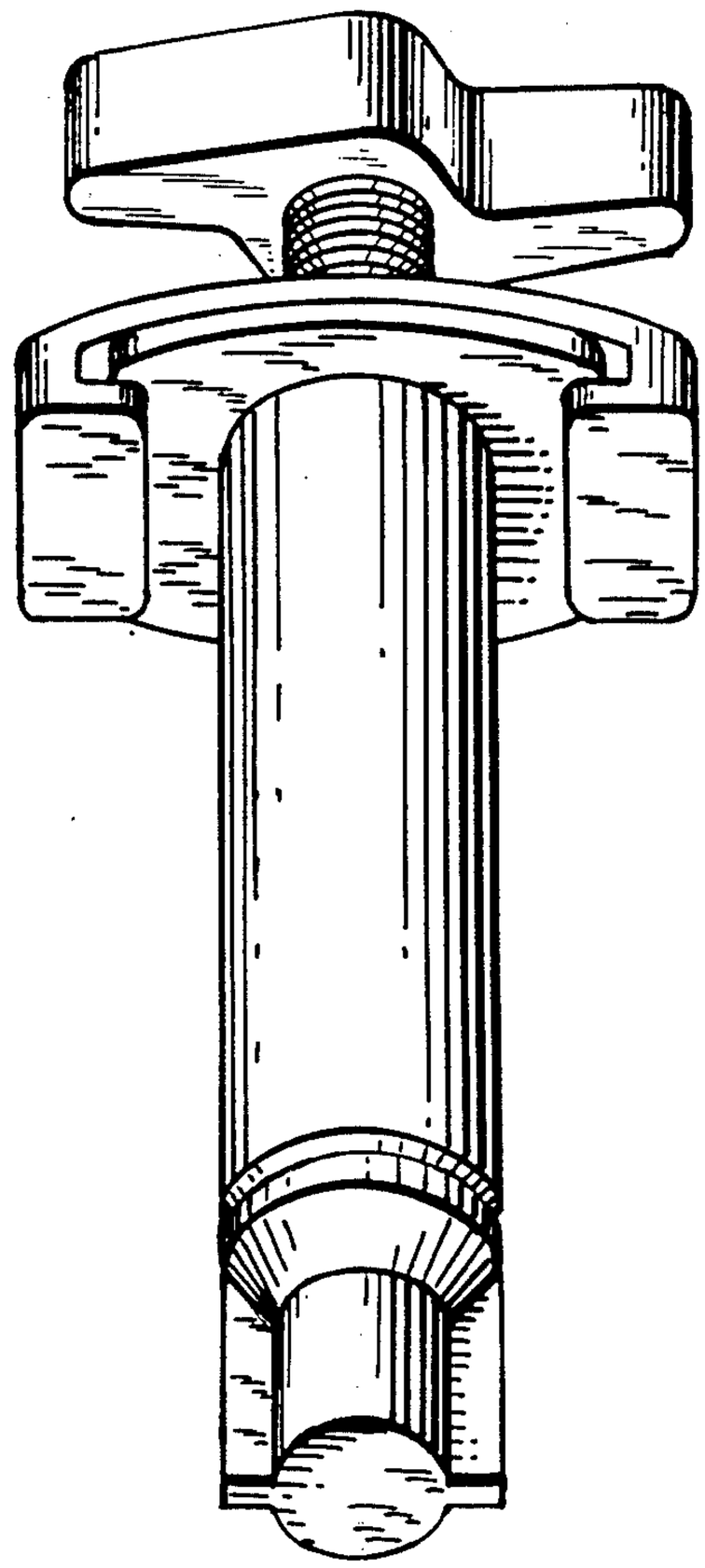

Fig. 2.