# United States Patent [19]

**Darrell**

[11] **Des. 273,799**

[45] ** **May 8, 1984**


[54] **IN-OUT SYMBOL FOR AUTOMATIC OPENING HINGED GLASS DOORS**


[76] Inventor: **Jack Darrell,** 1646 Old Spanish Trail, Houston, Tex. 77054



[**] Term: **14 Years**

[21] Appl. No.: **353,532**

[22] Filed: **Mar. 1, 1982**

[52] **U.S. Cl.** ..... **D20/11;** D10/109; D8/404

[58] **Field of Search** ..... D20/10, 11, 25, 27, D20/31–33, 40, 42; D8/404; D10/109



[56] **References Cited**

U.S. PATENT DOCUMENTS

| | | | |
|---|---|---|---|
| D. 242,582 | 11/1976 | Darrell | D20/33 |
| D. 242,662 | 12/1976 | Darrell | D20/33 |
| D. 247,795 | 4/1978 | Darrell | D20/11 |
| D. 248,059 | 5/1978 | Darrell | D20/11 |
| D. 248,060 | 5/1978 | Darrell | D20/11 |
| D. 248,425 | 7/1978 | Darrell | D20/25 |

OTHER PUBLICATIONS

Dreyfuss, Symbol Sourcebook, McGraw Hill Book Co., New York, 1972, pp. 30–37.



*Primary Examiner*—Catherine E. Kemper
*Attorney, Agent, or Firm*—Jack Darrell


[57] **CLAIM**

The ornamental design for an in-out symbol for automatic opening hinged glass doors, substantially as shown and described.

**DESCRIPTION**

FIG. **1** is a front elevational view of an in-out symbol for automatic opening hinged glass door showing my new design, the sign being of no substantial thickness; and

FIG. **2** is a front elevational view of a second embodiment of an in-out symbol for automatic opening hinged glass door.

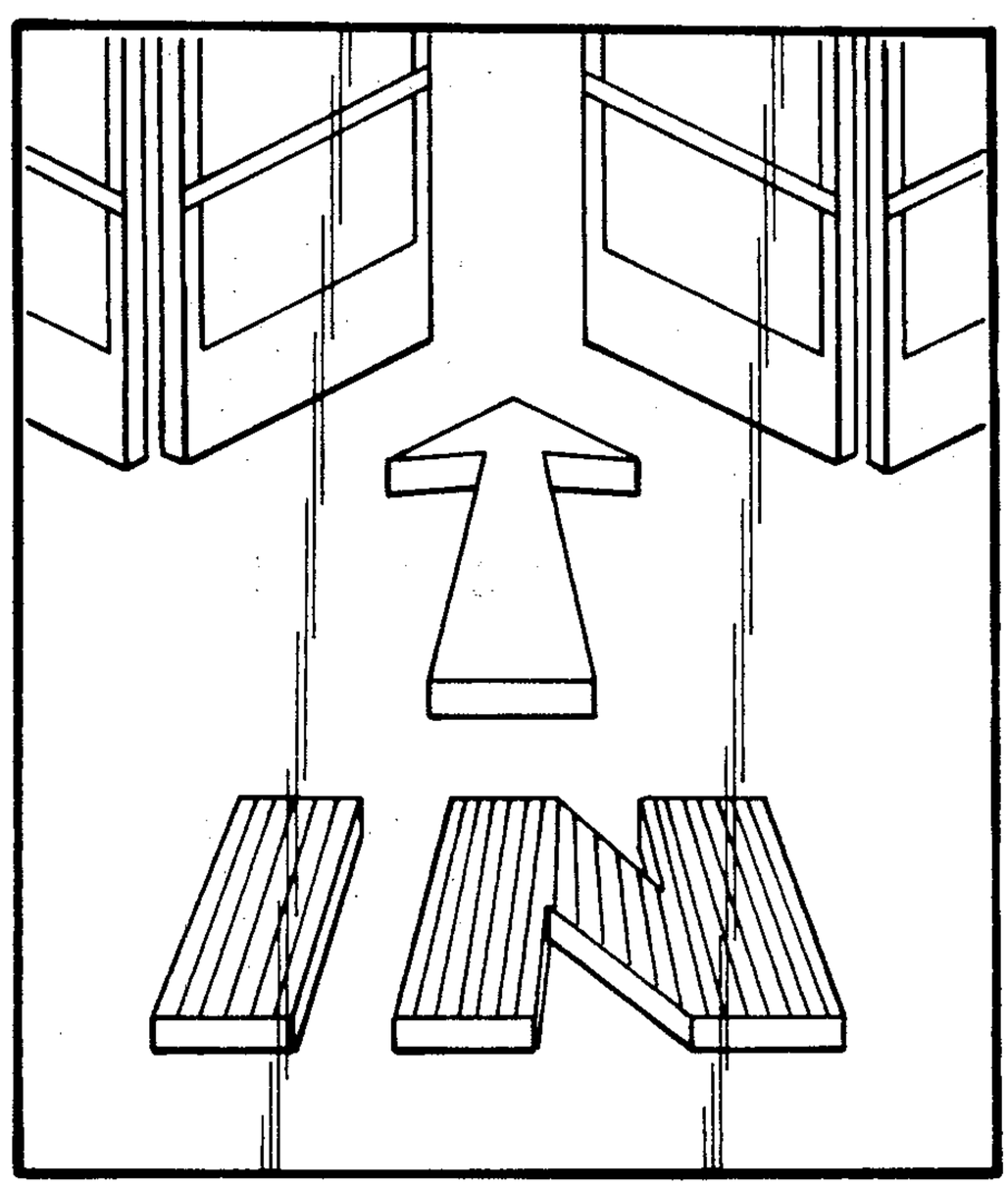

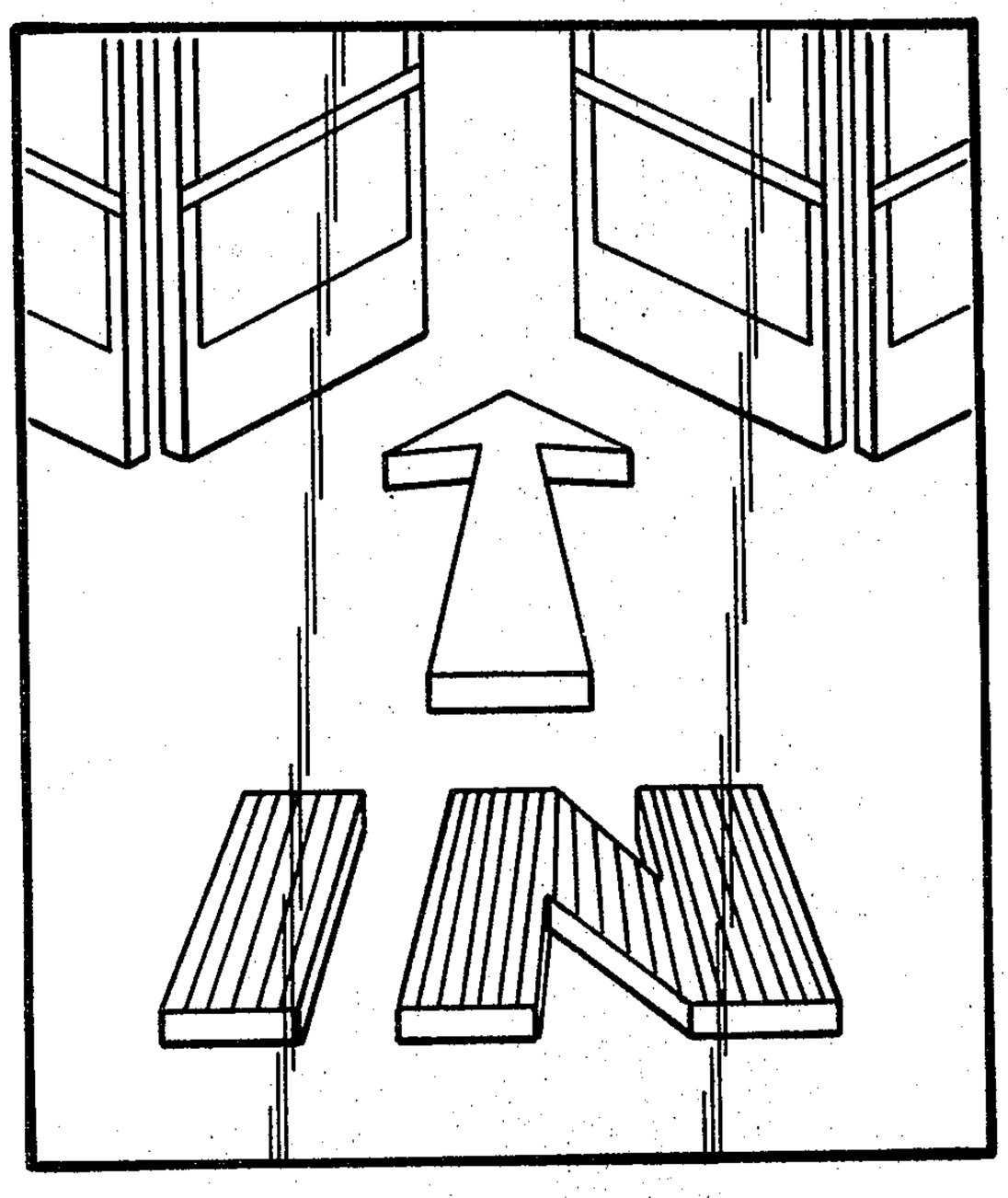

FIG. 1

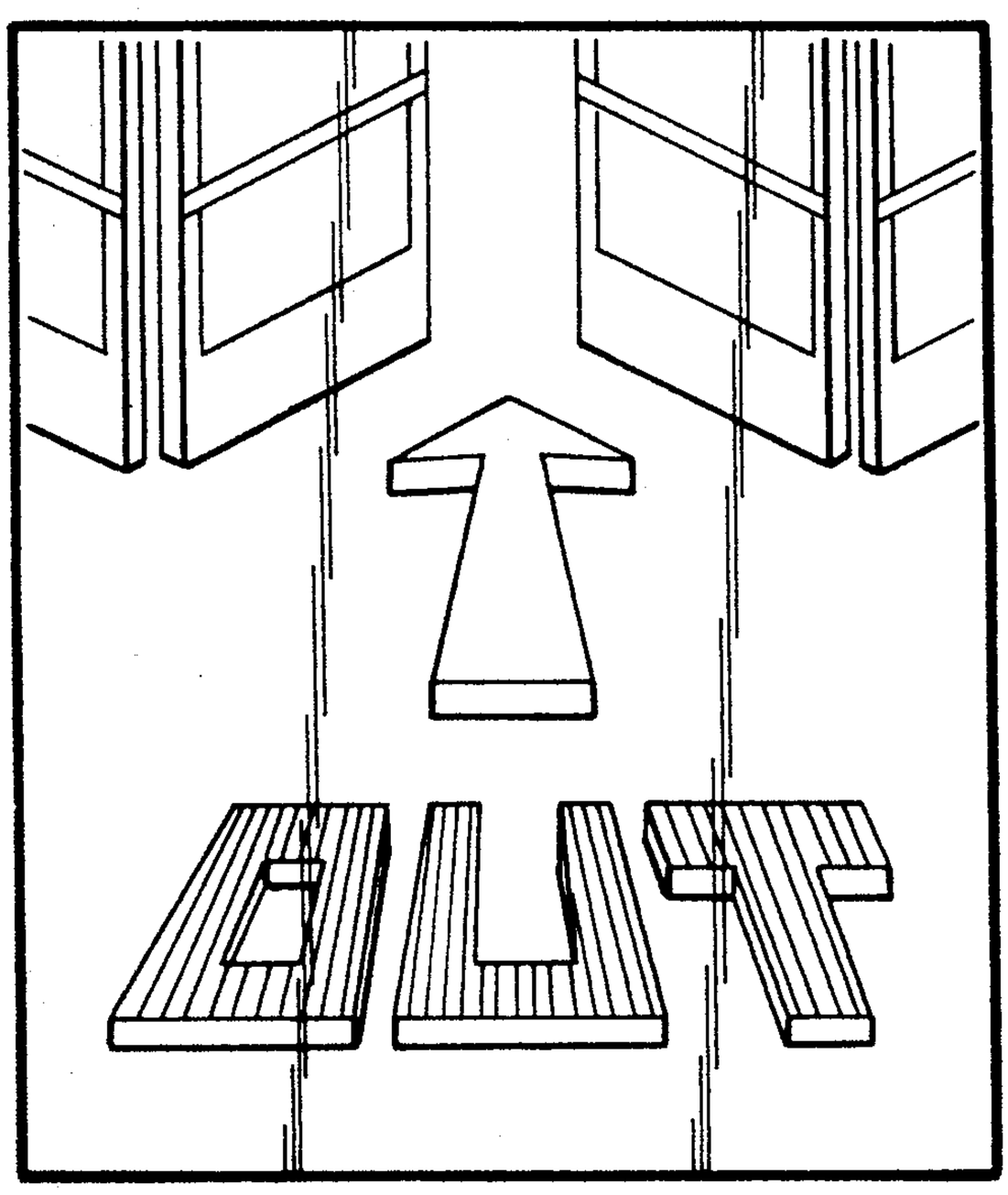

FIG. 2