# United States Patent [19]

**Barlow**

[11] **Des. 269,358**

[45] ** **Jun. 14, 1983**


[54] **BALL GAME HOUSING**


[75] Inventor: **Gordon A. Barlow,** Glenview, Ill.

[73] Assignee: **Gordon Barlow Design,** Skokie, Ill.



[**] Term: **14 Years**

[21] Appl. No.: **255,456**

[22] Filed: **Apr. 20, 1981**

[51] **Int. Cl.** ..... **D21—01**

[52] **U.S. Cl.** ..... **D21/9**

[58] **Field of Search** ..... D21/8, 9, 10, 19; 273/112, 123, 119, 113



[56] **References Cited**

U.S. PATENT DOCUMENTS

D. 171,736 3/1954 Stach ..... D21/10

D. 242,557 11/1976 Lohr et al. ..... D21/10

OTHER PUBLICATIONS

Playthings, Sep. 1940, p. 10, lower left, "Skip Ball".

F. A. O. Schwarz, Fall-Winter, 1978, p. 44, lower left, Item "E", Marble Shoot.



*Primary Examiner*—Melvin B. Feifer

*Attorney, Agent, or Firm*—Kinzer, Plyer, Dorn & McEachran


[57] **CLAIM**

The ornamental design for a ball game housing, as shown and described.

**DESCRIPTION**

FIG. **1** is a perspective view of a ball game housing, showing the new design;

FIG. **2** is a top plan view of the game;

FIG. **3** is a side elevational view of the game; and

FIG. **4** is a rear elevational view of the game.

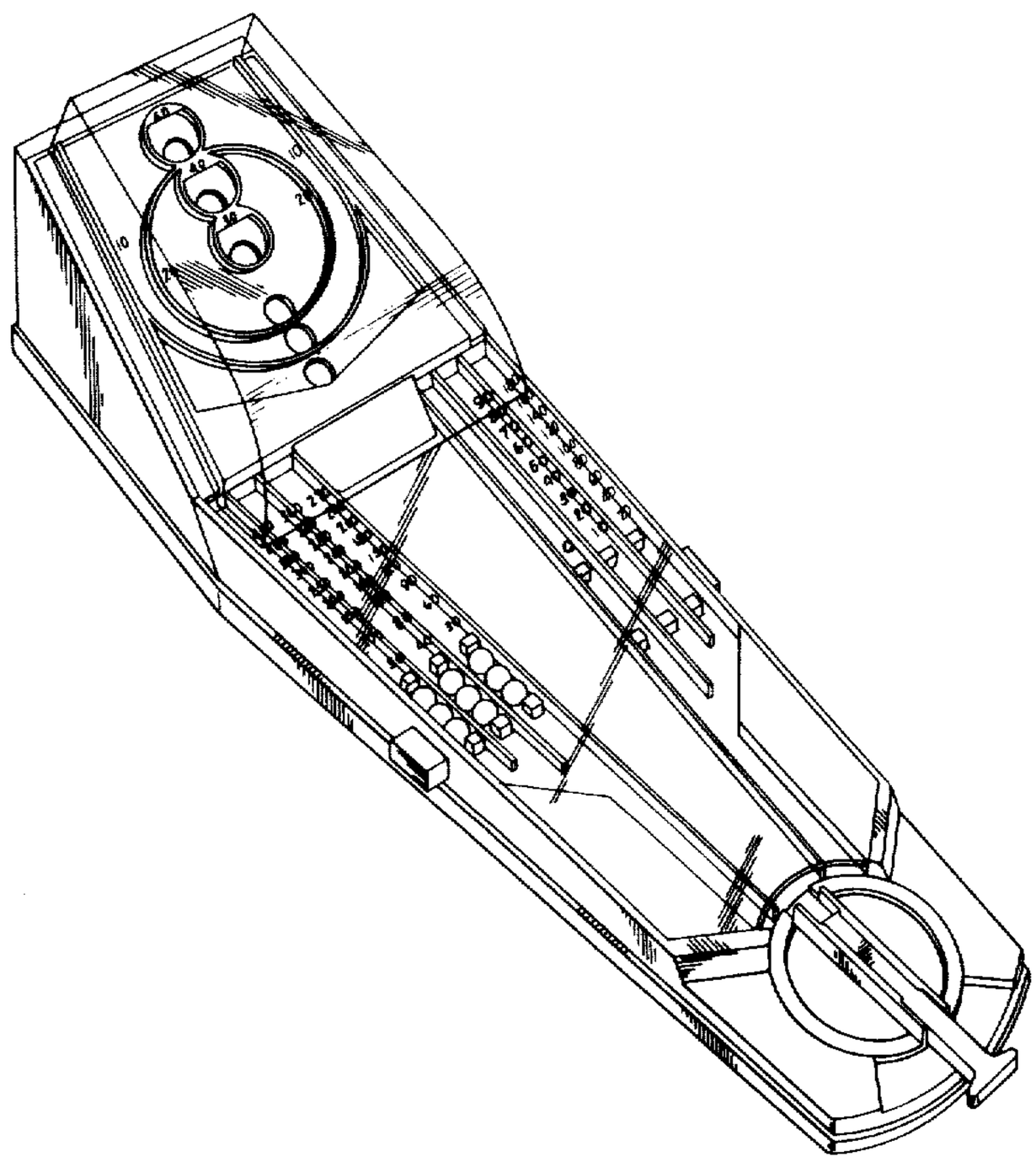

Fig.1.

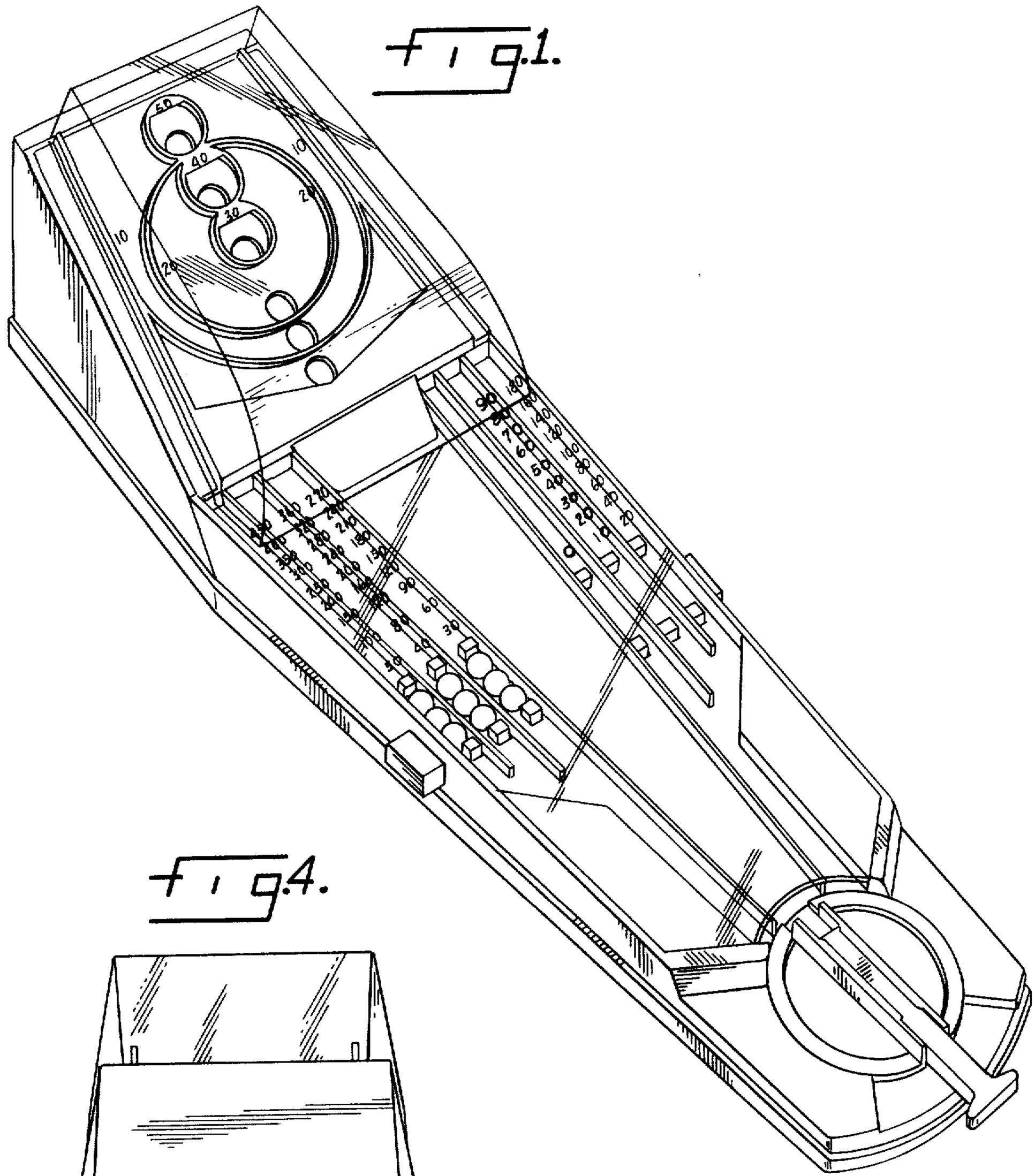

Fig.4.

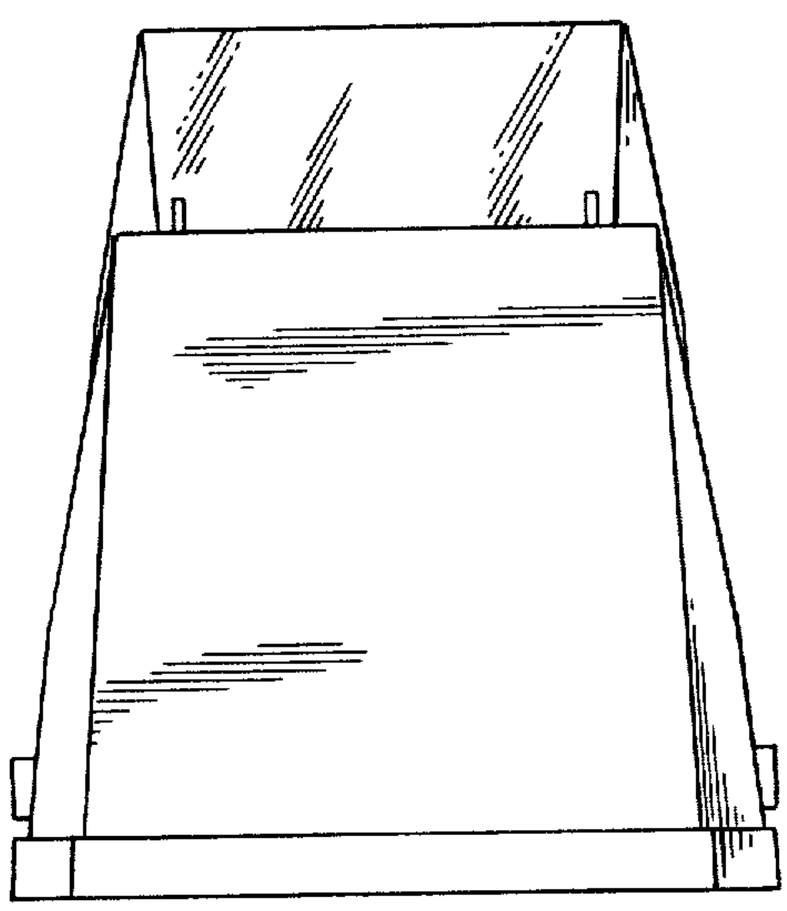

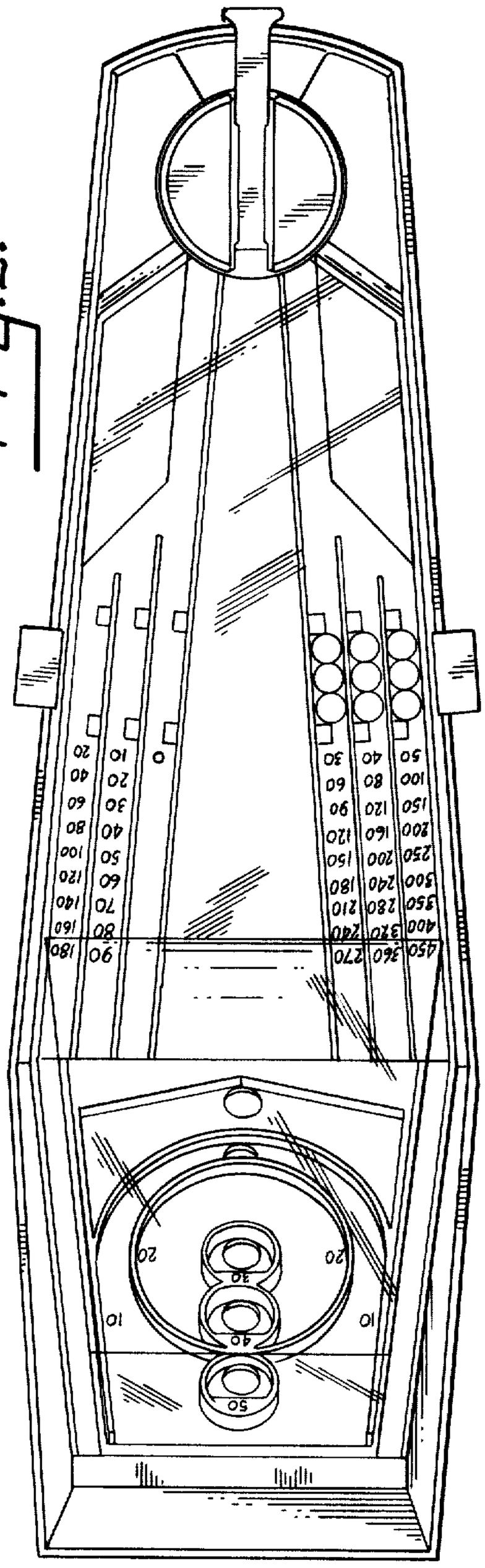
450 360 270 90 180
400 320 240 80 160
350 280 210 70 140
300 240 180 60 120
250 200 150 50 100
200 160 120 40 80
150 120 90 30 60
100 80 60 20 40
50 40 30 10 20
0
50
40
30
20
10
10
20

FIG. 2.

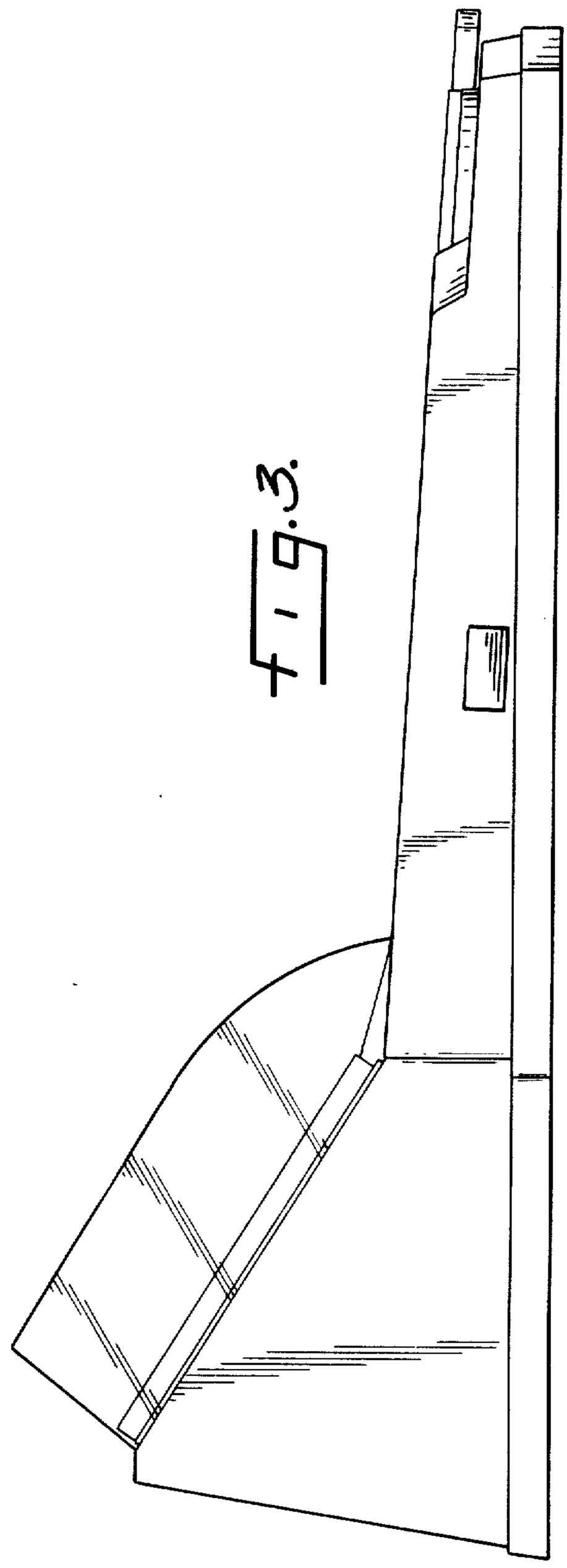

FIG. 3.