United States Patent [19]

Mikado

[11] **Des. 269,261**

[45] ** **Jun. 7, 1983**

[54] **MOTORTRICYCLE**

[75] Inventor: **Yoshio Mikado,** Asaka, Japan

[73] Assignee: **Honda Giken Kogyo Kabushiki Kaisha,** Tokyo, Japan

[**] Term: **14 Years**

[21] Appl. No.: **171,401**

[22] Filed: **Jul. 23, 1980**

[30] **Foreign Application Priority Data**

Jan. 24, 1980 [JP] Japan 55-1842

[51] **Int. Cl.** ..... **D12—11**

[52] **U.S. Cl.** **D12/110**

[58] **Field of Search** D12/110, 85; 180/210, 180/211, 215

[56] **References Cited**

FOREIGN PATENT DOCUMENTS

365488 6/1973 Japan .

365488 12/1974 Japan .

OTHER PUBLICATIONS

"Snow Goer", Dec. 1979, pp. 7, 39, cover, Honda ATC110 & Yamaha Tri-Moto 125.

Primary Examiner—James M. Gandy

Attorney, Agent, or Firm—Armstrong, Nikaido, Marmelstein & Kubovcik

[57] **CLAIM**

The ornamental design for a motortricycle, as shown.

DESCRIPTION

FIG. **1** is a left side elevational view of a motortricycle, showing my new design;
FIG. **2** is a right side elevational view thereof;
FIG. **3** is a front elevational view thereof;
FIG. **4** is a rear elevational view thereof;
FIG. **5** is a top plan view thereof;
FIG. **6** is a bottom plan view thereof; and
FIG. **7** is a perspective view thereof.

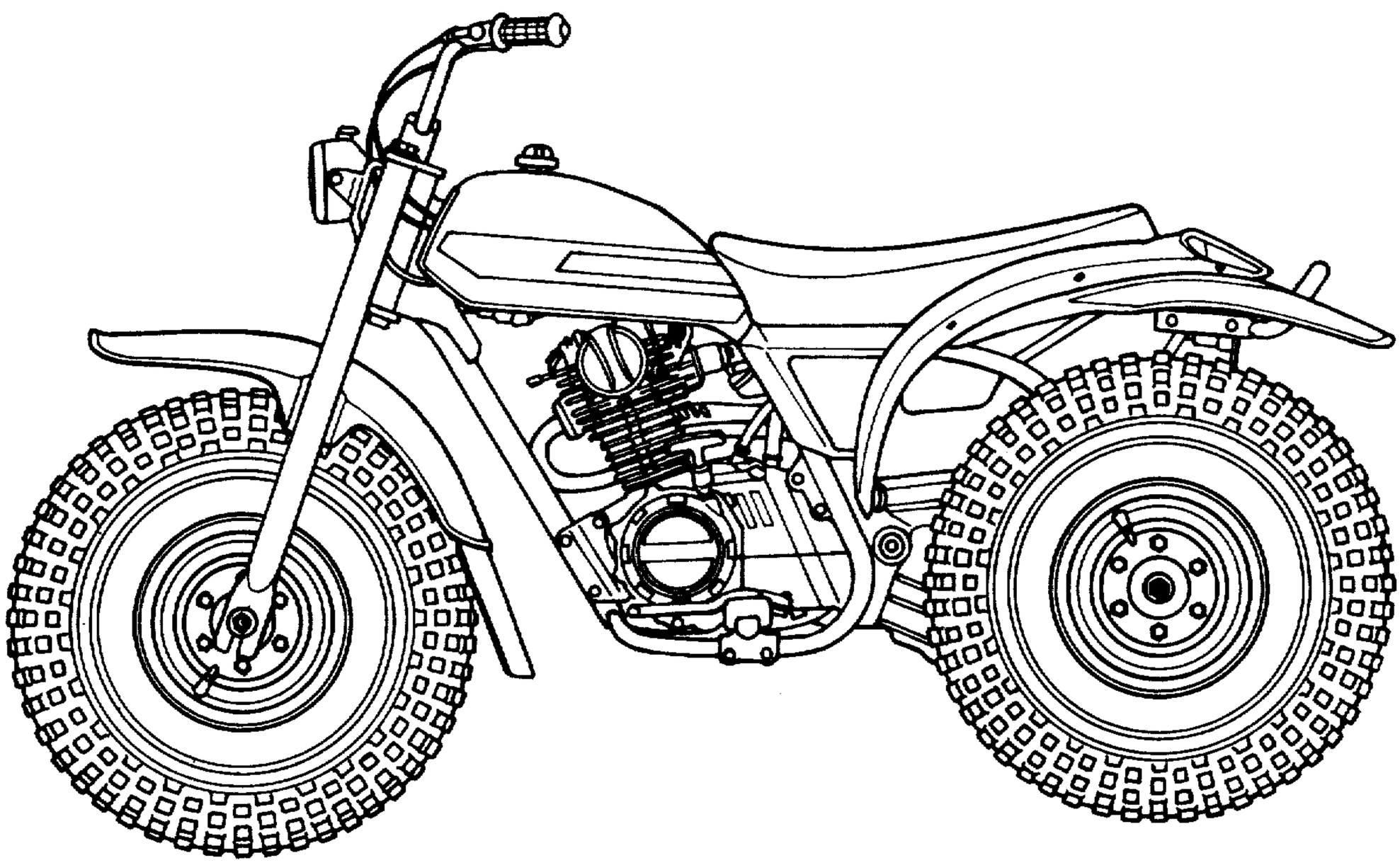

FIG.1

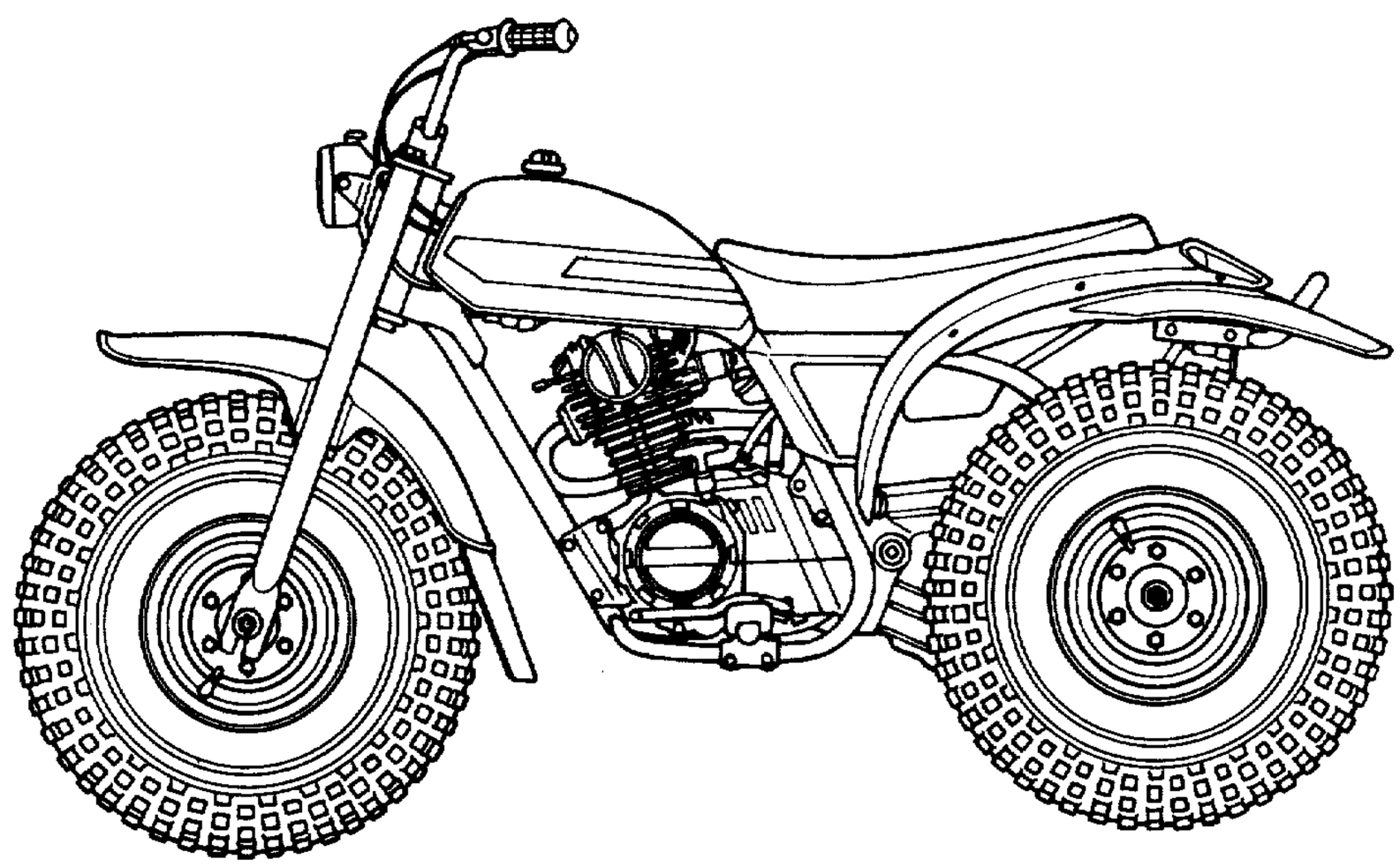

FIG.2

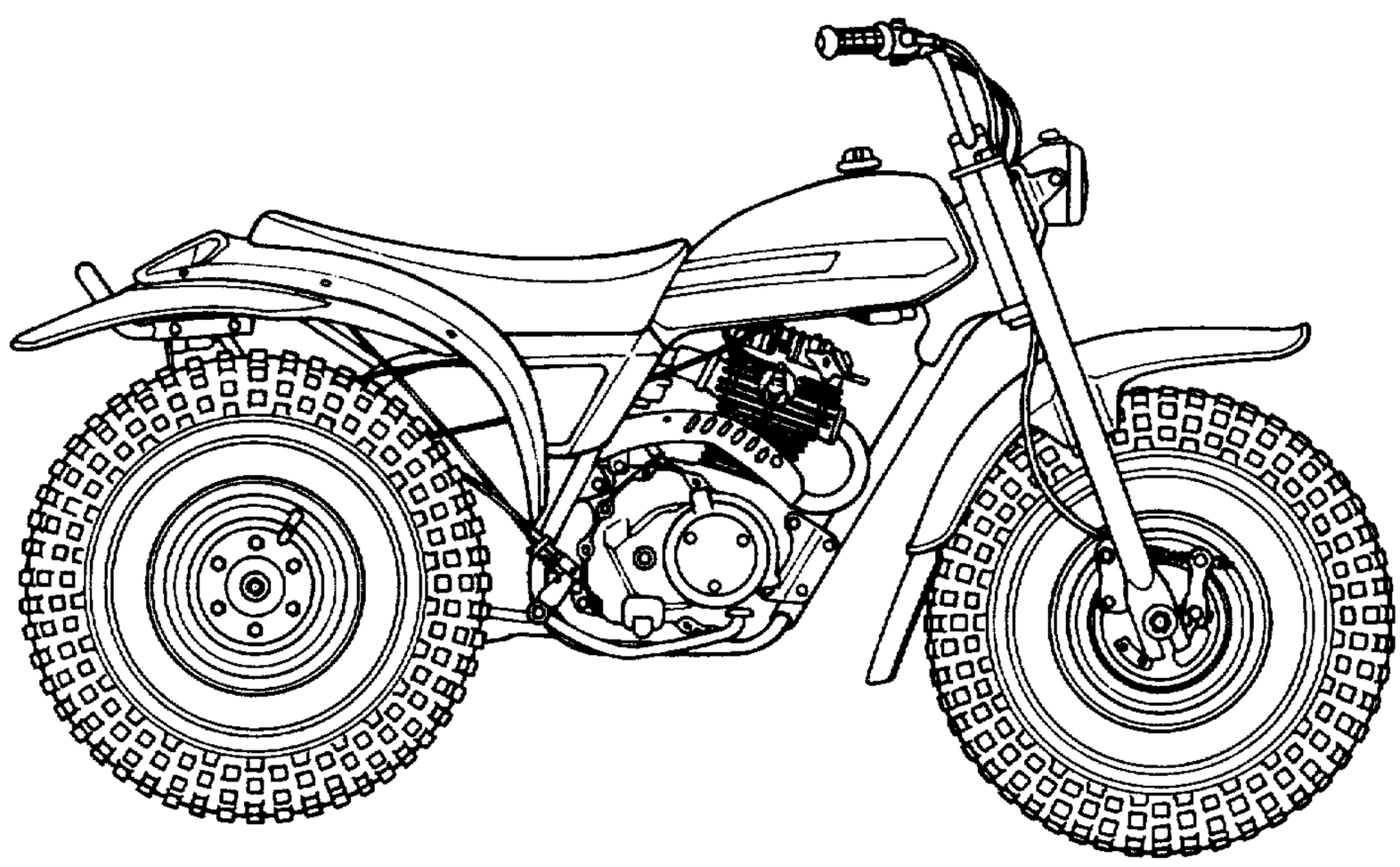

FIG.3

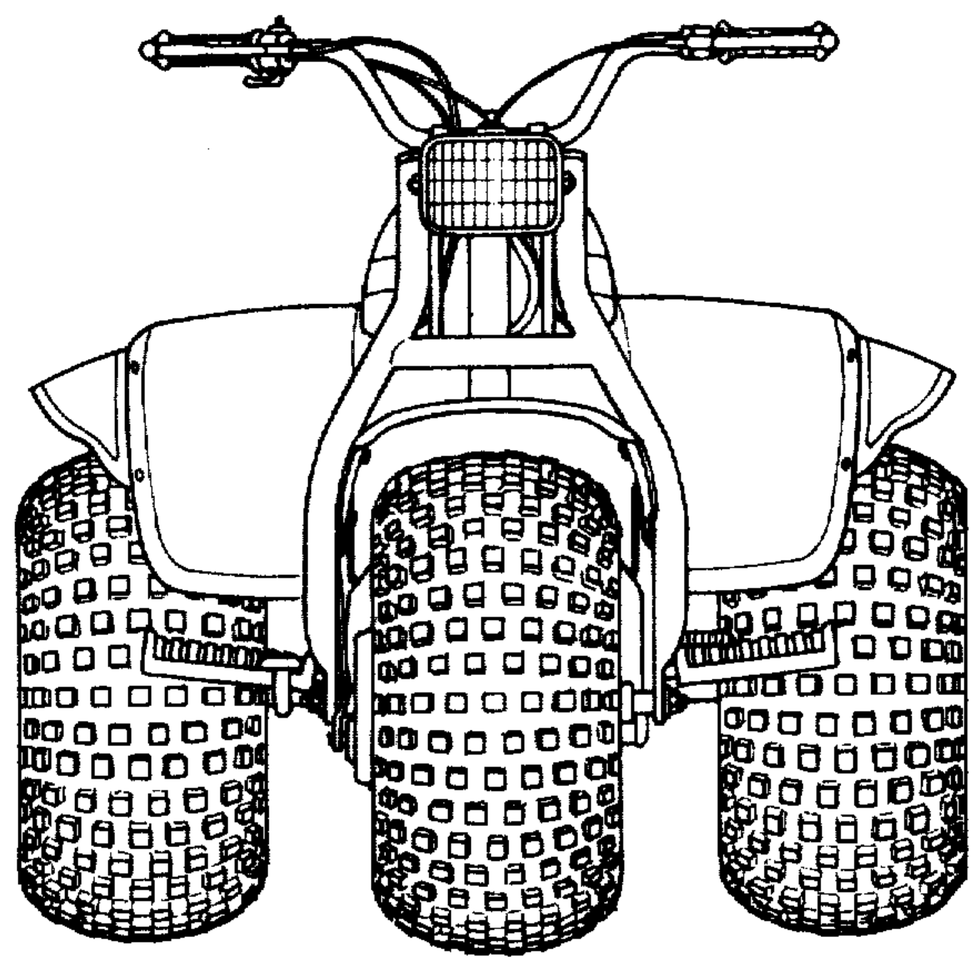

FIG.4

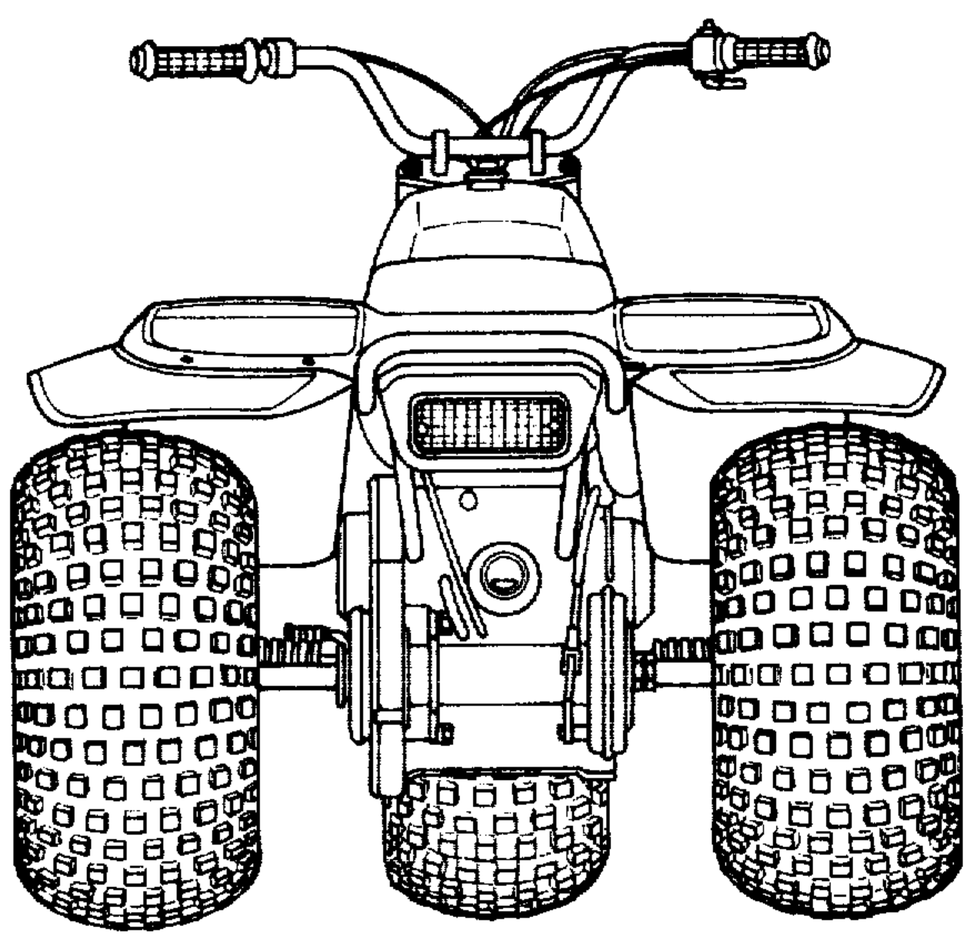

FIG.5

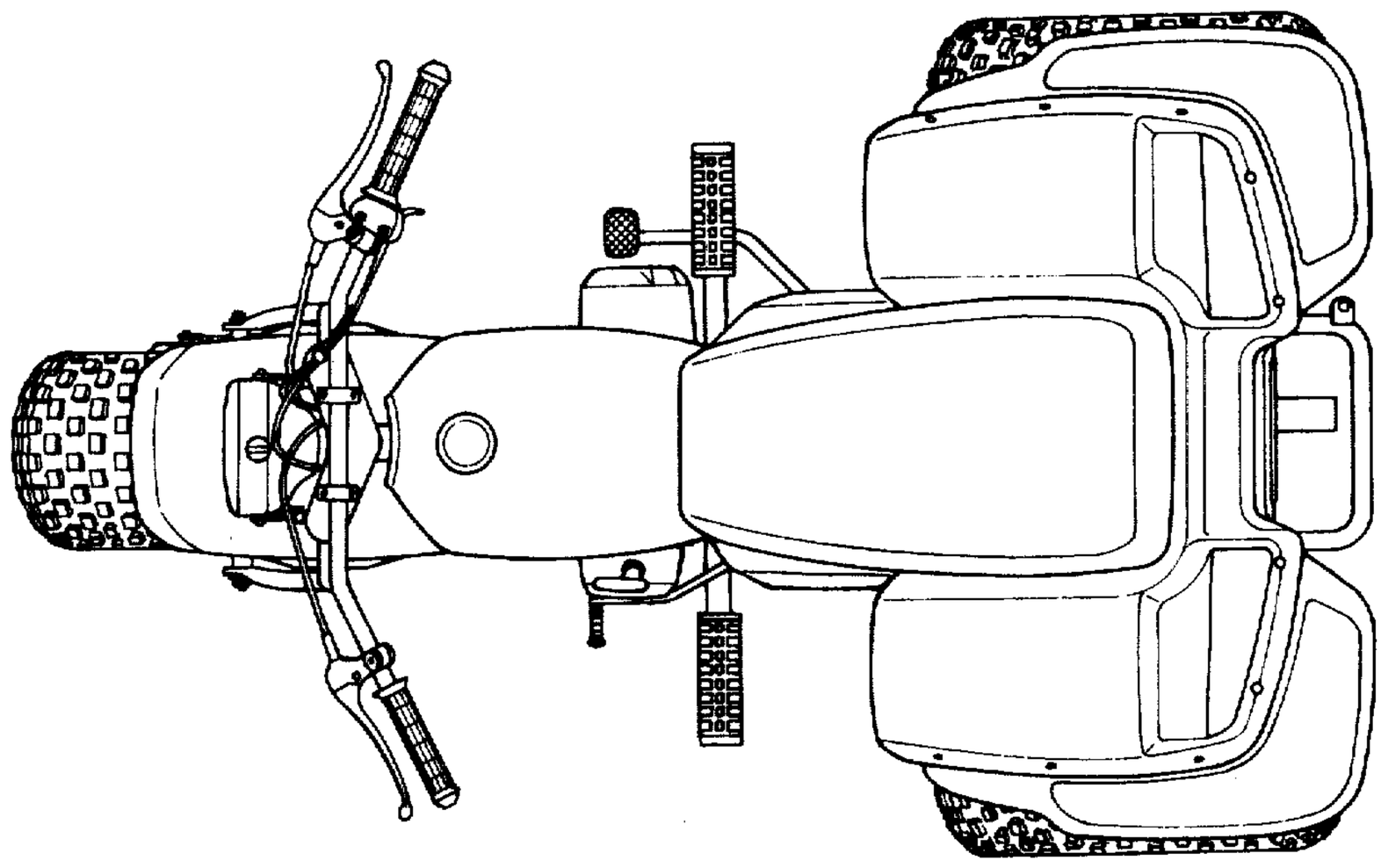

FIG.6

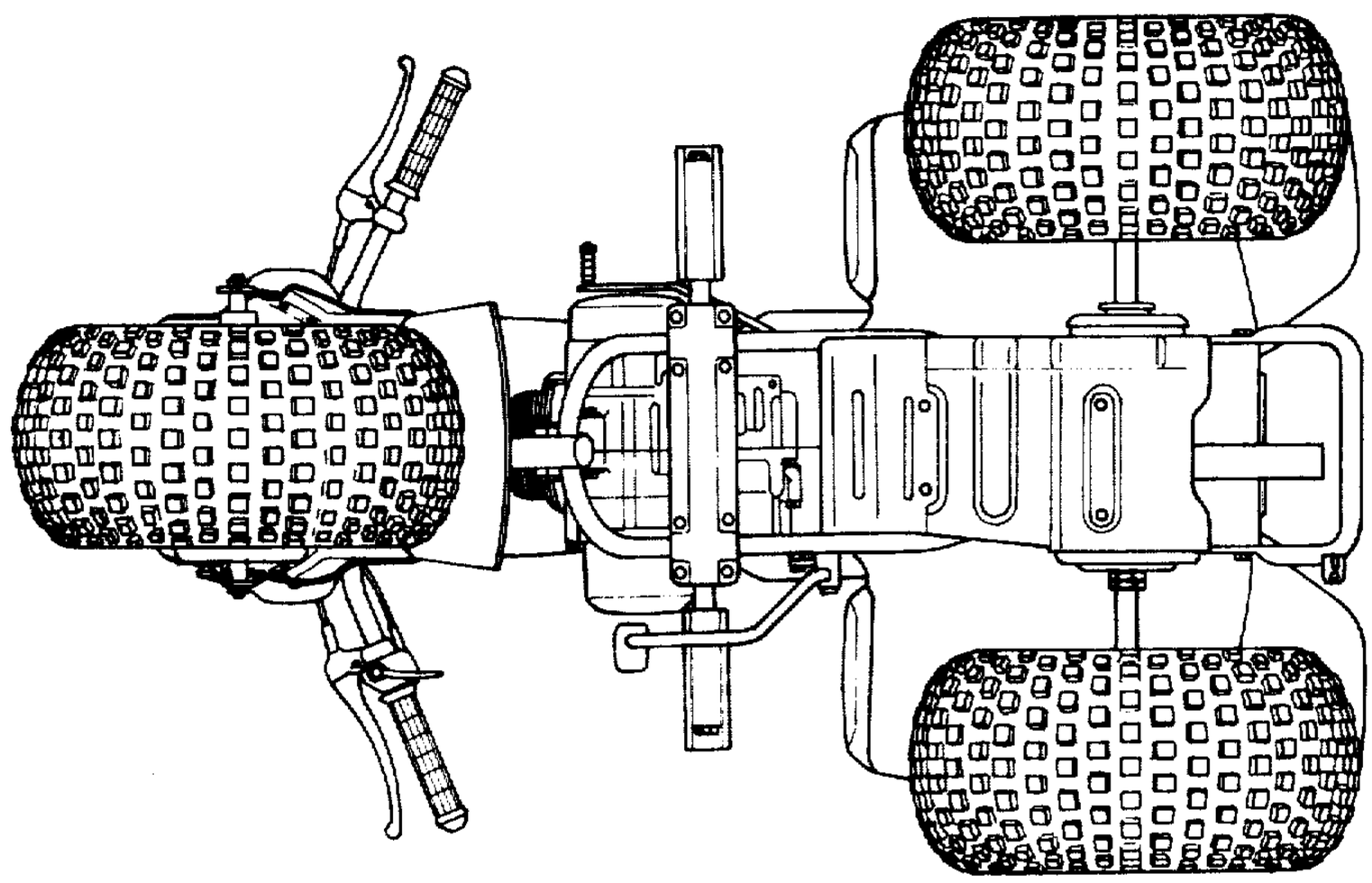
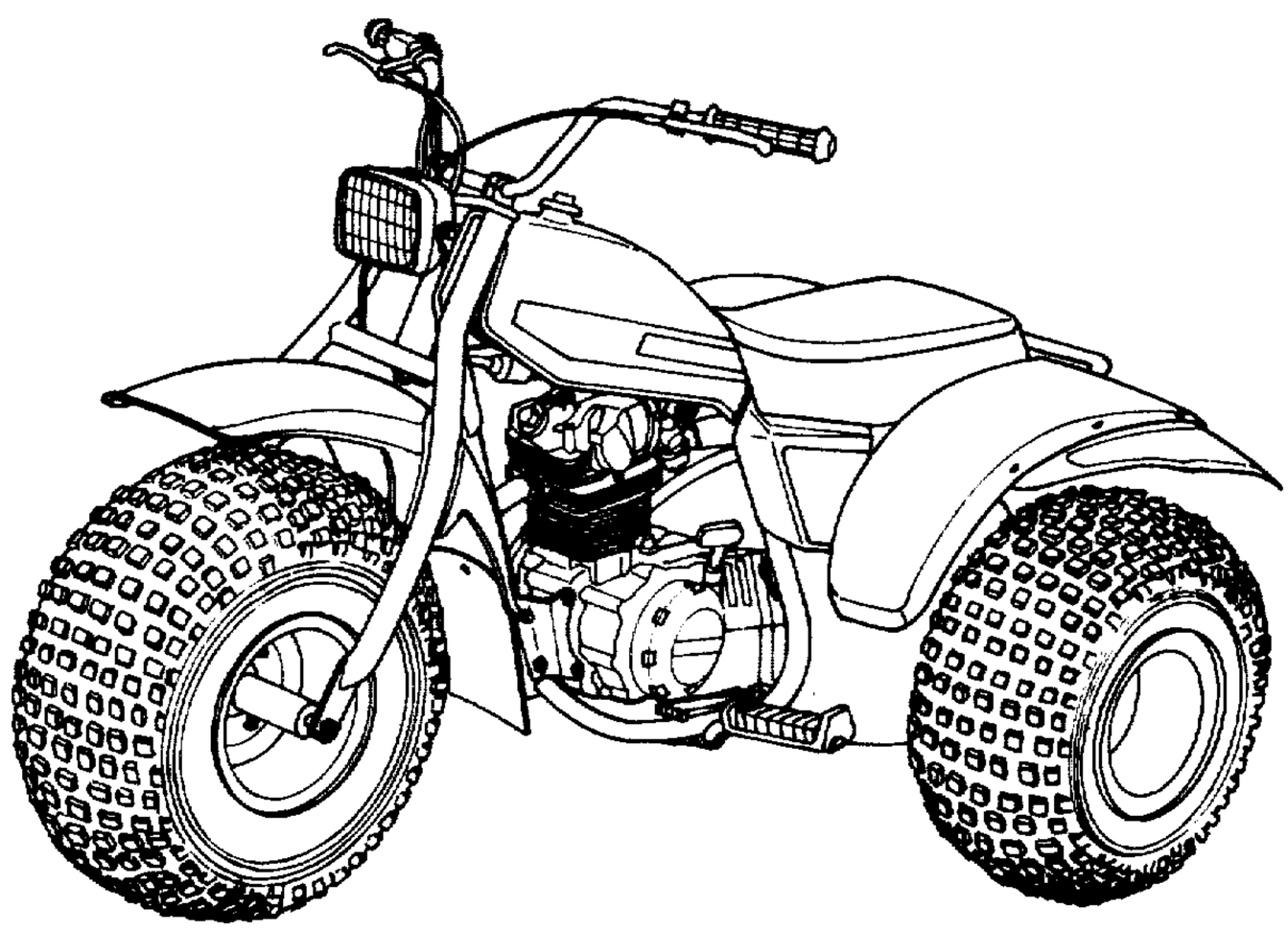
FIG.7