United States Patent [19]

Amirault

[11] **Des. 263,432**

[45] ** **Mar. 23, 1982**

[54] **VISION SHIELD FOR A STUDENT TYPIST OR THE LIKE**

[76] Inventor: **Gerald A. Amirault,** 693 Portsmouth Ave., Kingston, Ontario, Canada, K7M 1W4

[**] Term: **14 Years**

[21] Appl. No.: **106,282**

[22] Filed: **Dec. 21, 1979**

[30] **Foreign Application Priority Data**

Nov. 21, 1979 [CA] Canada 2111791

[51] **Int. Cl.** ..... **D2—99**

[52] **U.S. Cl.** **D2/234**

[58] **Field of Search** ..... D2/359, 234, 246, 247; D12/114; 400/714, 717, 718, 718.1, 718.2; 2/15, 11, 12, 9; 224/30 A; 197/105

[56] **References Cited**

U.S. PATENT DOCUMENTS

1,065,599	6/1913	Elliot	400/714
1,906,539	5/1933	Church	2/11
3,295,143	1/1967	Hoffman	D2/234
3,613,116	10/1971	Stroud	2/12
3,655,107	4/1972	Russ et al.	224/30 A
3,762,528	10/1973	Carman	197/105

OTHER PUBLICATIONS

Mechanix Illustrated, 6/61, p. 95, left ctr.

Journal of Business Education, 10/76, p. 32, bottom of page.

Journal of Business Education, 4/77, p. 306, bottom of page.

Primary Examiner—George P. Word

[57] **CLAIM**

The ornamental design for a vision shield for a student typist or the like, substantially as shown and described.

DESCRIPTION

FIG. **1** is a front elevational view of a vision shield for a student typist or the like showing my new design;
FIG. **2** is a rear perspective view thereof;
FIG. **3** is a top plan view of FIG. **1;**
FIG. **4** is a bottom plan view thereof; and
FIG. **5** is a right side elevational view thereof.

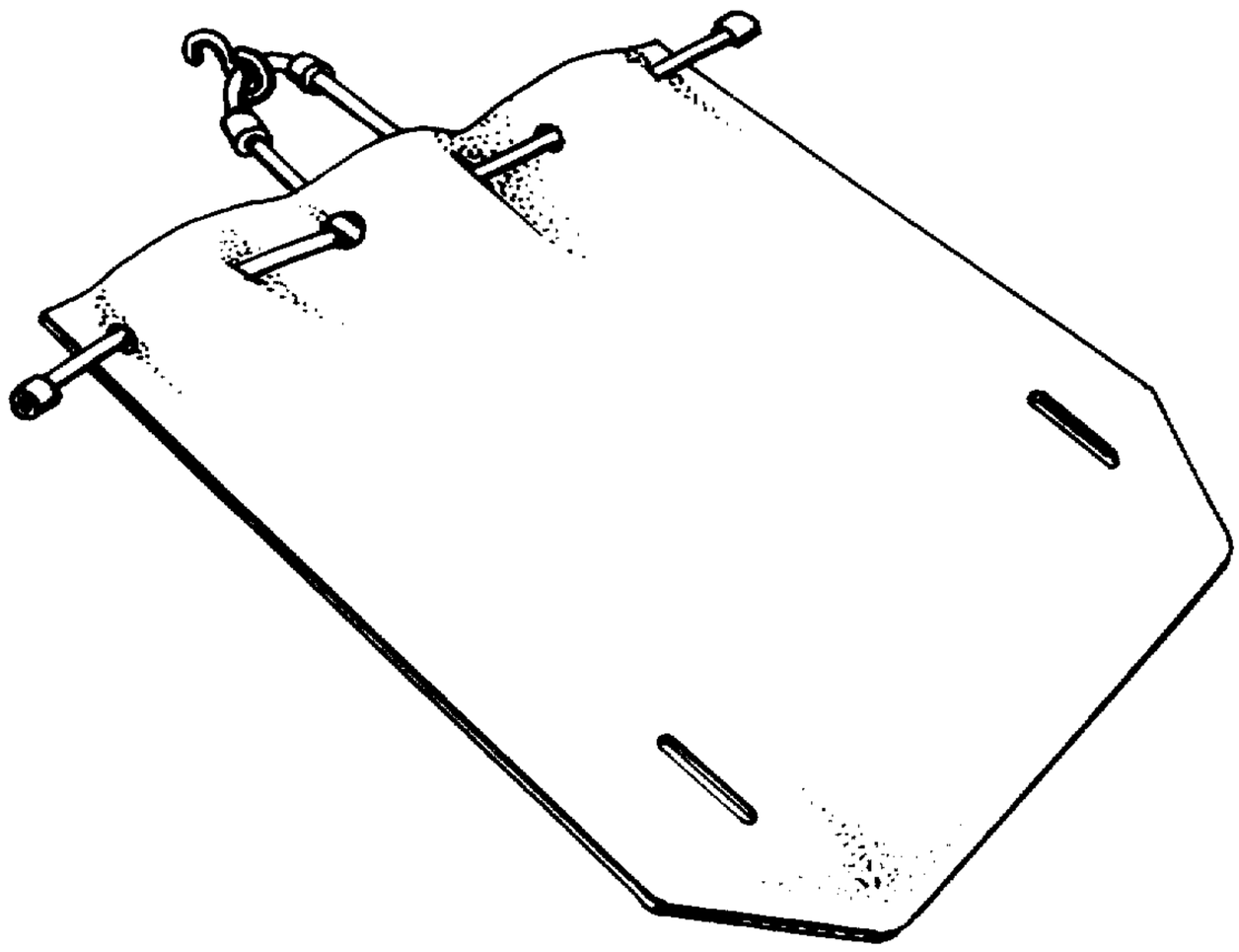

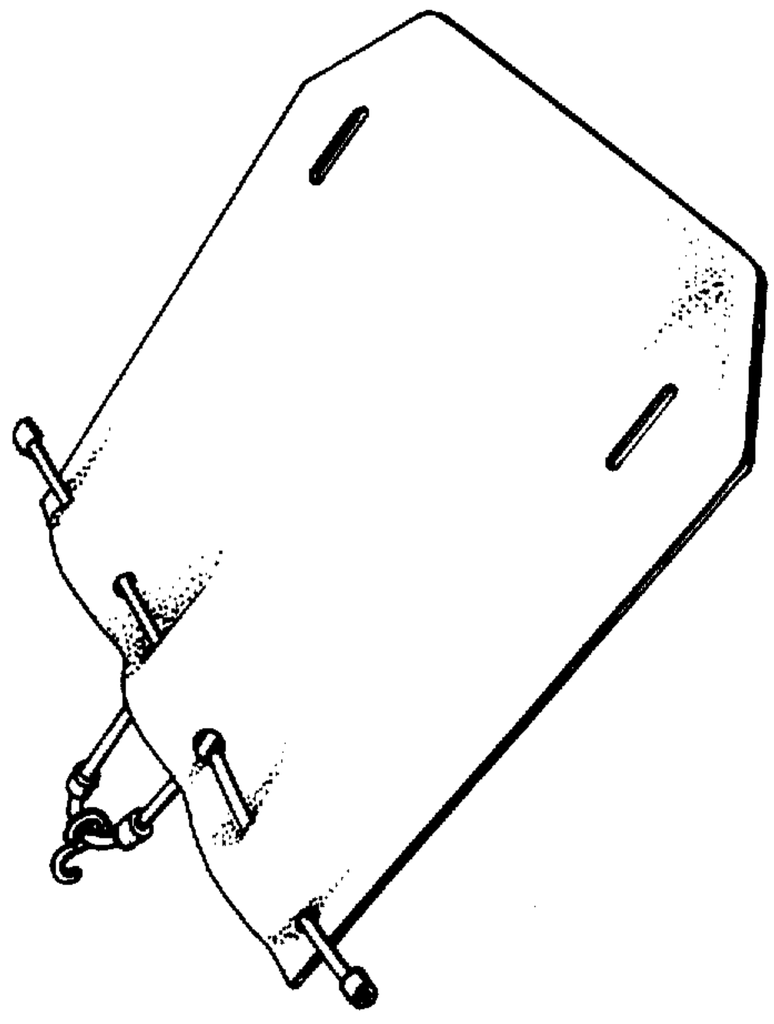

FIG. 2

FIG. 5

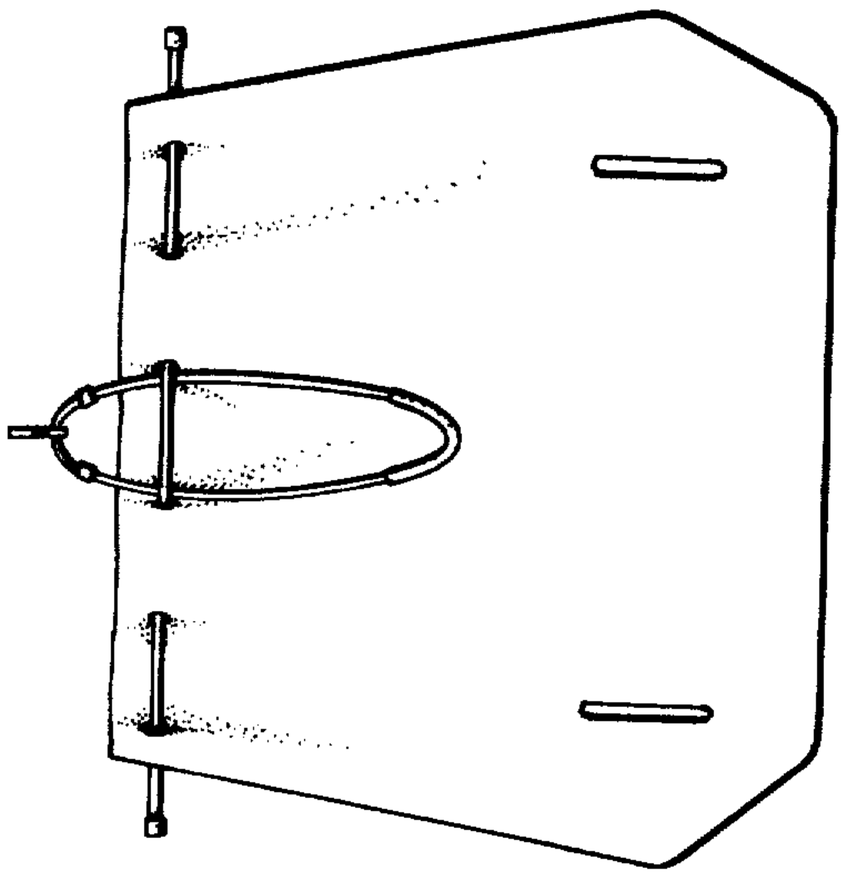

FIG. 1

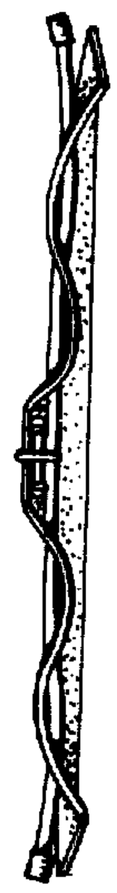

FIG. 3

FIG. 4