# United States Patent [19]

**Smallwood, Jr.**

[11] **Des. 258,601**

[45] ** **Mar. 17, 1981**


[54] **PUZZLE**


[76] Inventor: **James Smallwood, Jr.**, 5072 Xandu, Denver, Colo. 80239



[**] Term: **14 Years**

[21] Appl. No.: **844,703**

[22] Filed: **Oct. 25, 1977**

[51] **Int. Cl.** ..... **D21—01**
[52] **U.S. Cl.** ..... **D21/106**
[58] **Field of Search** ..... D21/106, 107; 46/16, 46/23-30; 273/153 R, 158



[56] **References Cited**

U.S. PATENT DOCUMENTS

D. 246,922 1/1978 Heign ..... D21/106

FOREIGN PATENT DOCUMENTS

121131 6/1927 Switzerland ..... 273/158



*Primary Examiner*—Charles A. Rademaker
*Attorney, Agent, or Firm*—H. B. Van Valkenburgh; Frank C. Lowe


[57] **CLAIM**

The ornamental design for a puzzle, as shown and described.

**DESCRIPTION**
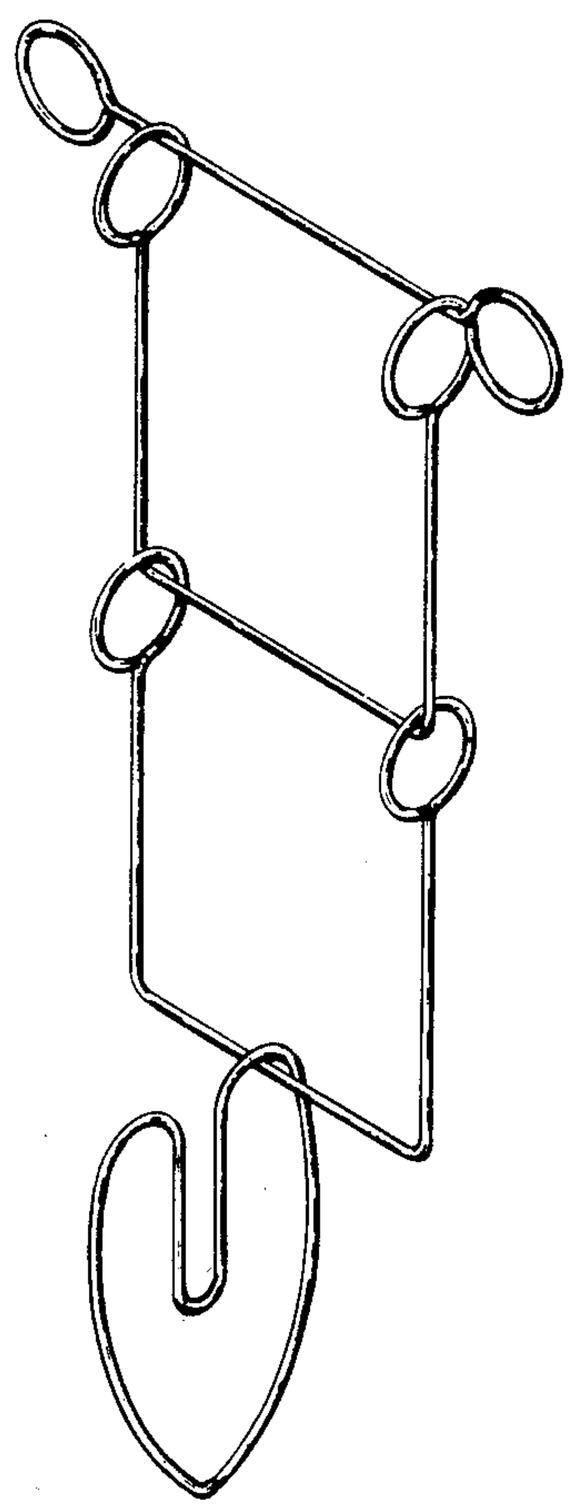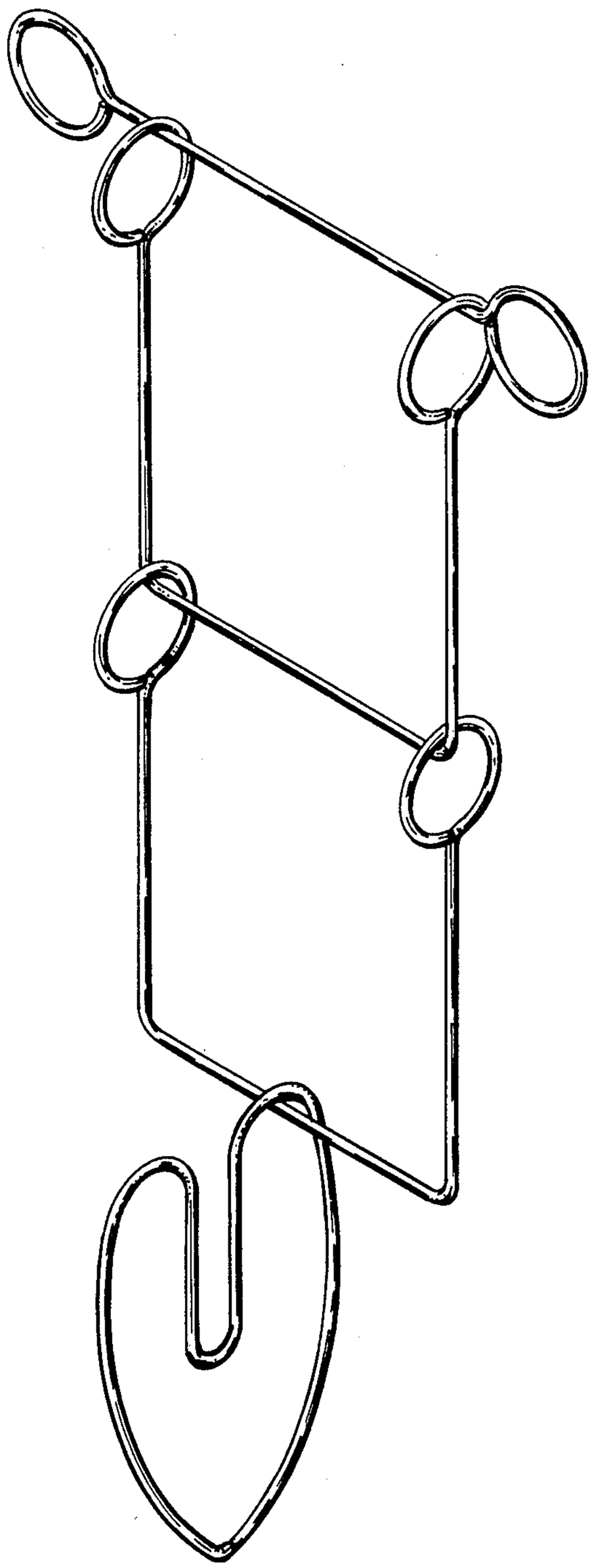
The FIGURE is a perspective view of a puzzle showing my new design, the side opposite being substantially a mirror image.