# United States Patent [19]

**Thrush**

[11] **Des. 247,867**

[45] ** **May 16, 1978**


[54] **TUMBLER OR SIMILAR ARTICLE**


[75] Inventor: **James Lloyd Thrush,** Lancaster, Ohio

[73] Assignee: **Anchor Hocking Corporation,** Lancaster, Ohio



[**] Term: **14 Years**

[21] Appl. No.: **744,458**

[22] Filed: **Nov. 24, 1976**

[51] **Int. Cl.** ..... **D7—01**

[52] **U.S. Cl.** ..... **D7/14**

[58] **Field of Search** ..... D7/6–15, D7/3; D9/220



[56] **References Cited**

U.S. PATENT DOCUMENTS

| | | | |
|---|---|---|---|
| D. 21,181 | 11/1891 | Proeger | D7/14 |
| D. 64,802 | 6/1924 | Haden | D7/13 |
| D. 76,669 | 10/1928 | Dawson | D7/6 |
| D. 184,976 | 4/1959 | Bloch | D7/14 |
| D. 202,225 | 9/1965 | Huston | D9/220 |
| D. 210,234 | 2/1968 | Alvarez | D7/14 |
| D. 211,037 | 5/1968 | Benes | D7/6 |
| D. 238,541 | 1/1976 | Benes | D7/14 |
| D. 244,740 | 6/1977 | Durand | D7/14 |



*Primary Examiner*—Winifred E. Herrmann
*Attorney, Agent, or Firm*—Joseph J. Previto


[57] **CLAIM**

The ornamental design for a tumbler or similar article, substantially as shown and described.

**DESCRIPTION**

FIG. **1** is an elevational view of a tumbler or similar article showing my new design;
FIG. **2** is a top view thereof:
FIG. **3** is a sectional view thereof taken along line **3—3** of FIG. **1;**
FIG. **4** is a sectional view taken along line **4—4** of FIG. **1;** and
FIG. **5** is an sectional view taken along line **5—5** of FIG. **1.**

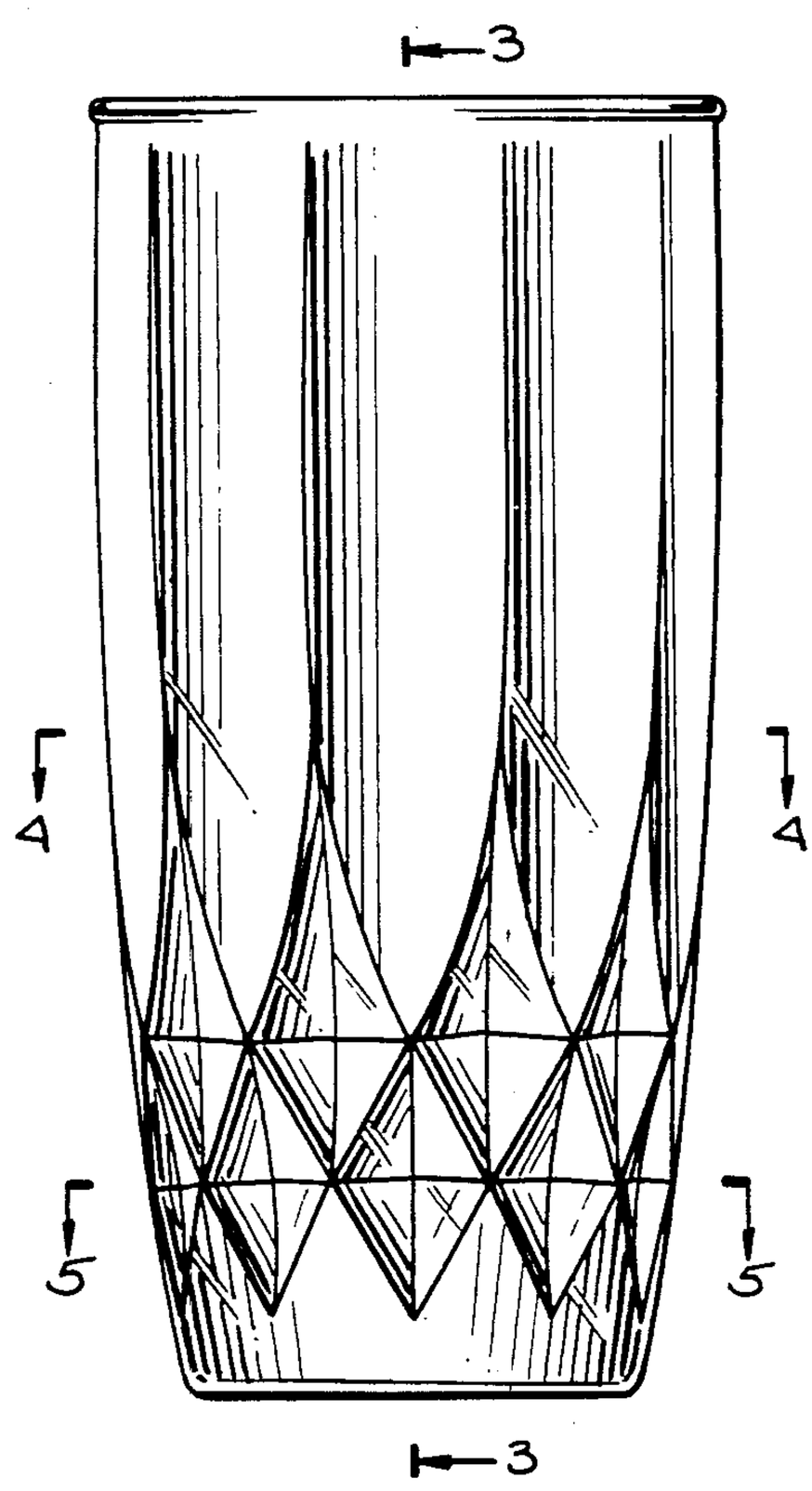

Fig.1.

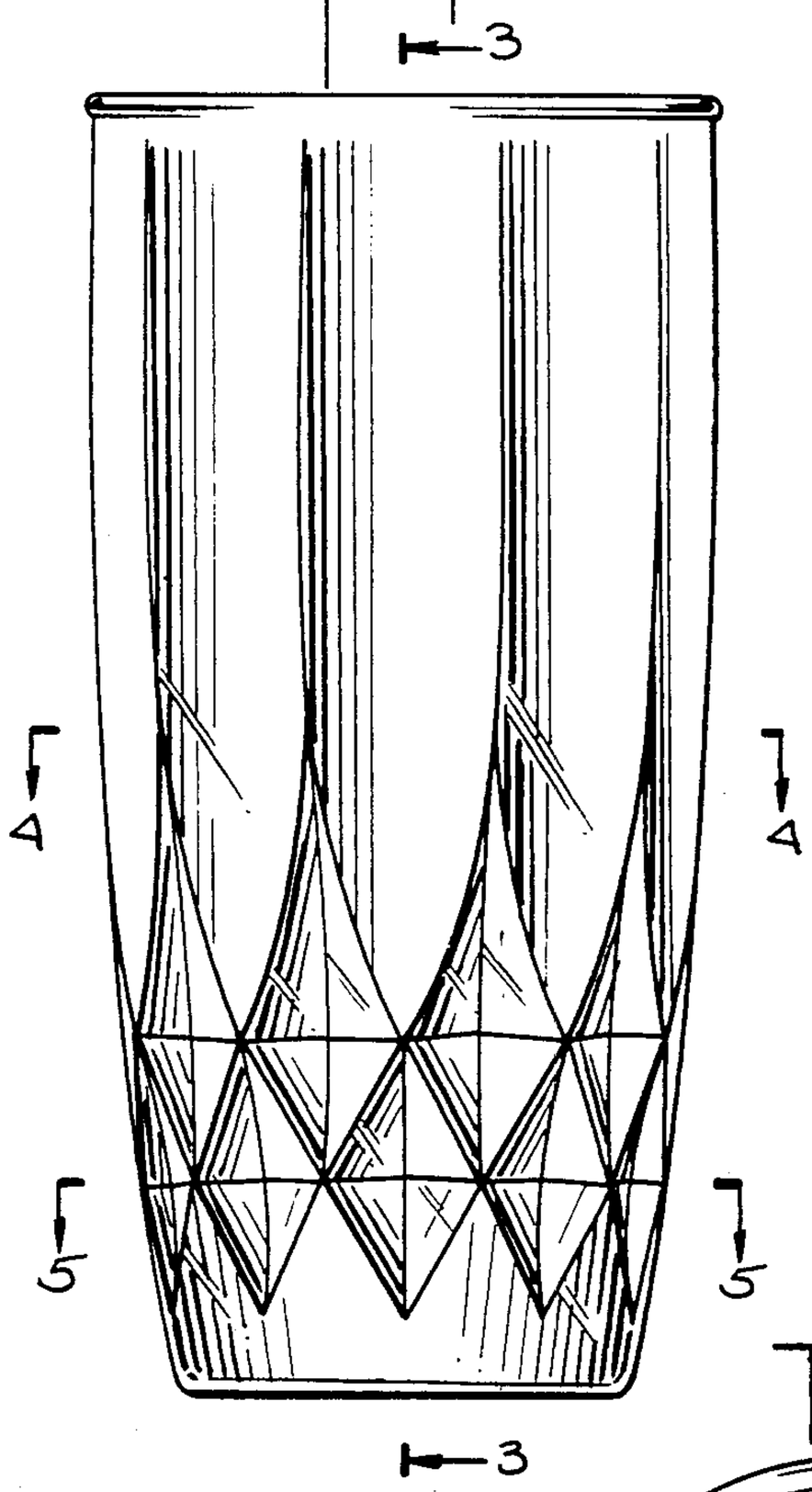


Fig.3.

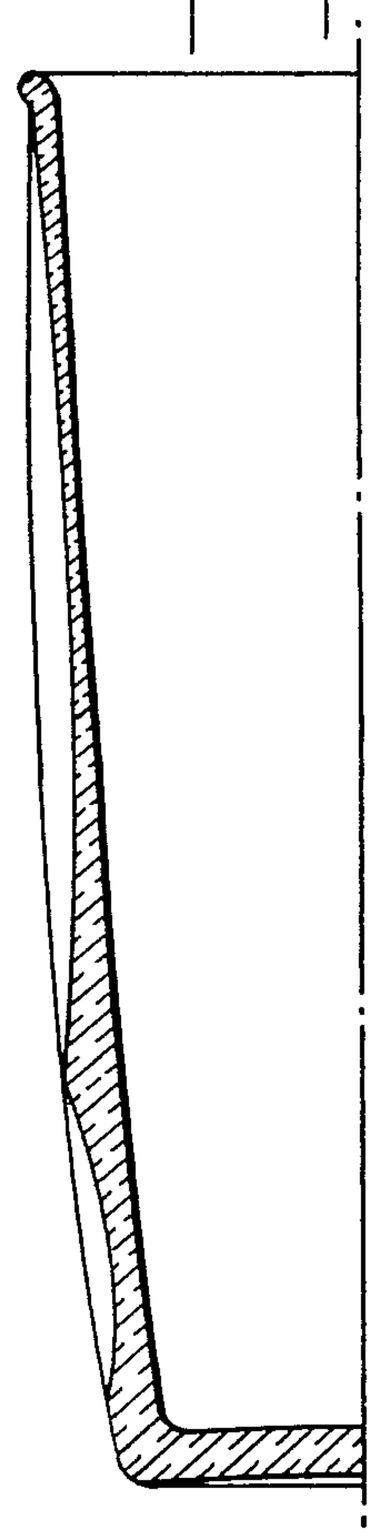

Fig.2.

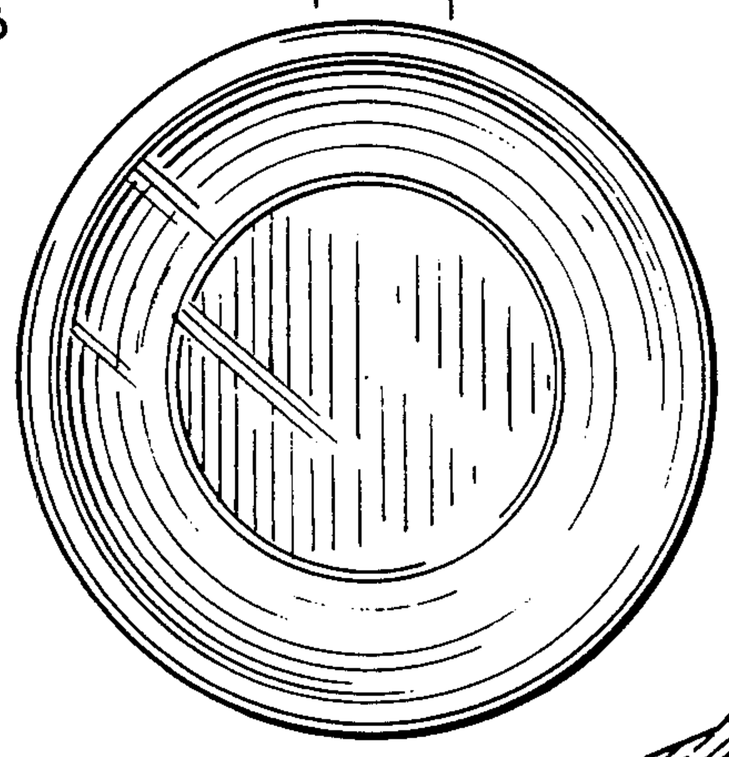

Fig.4.

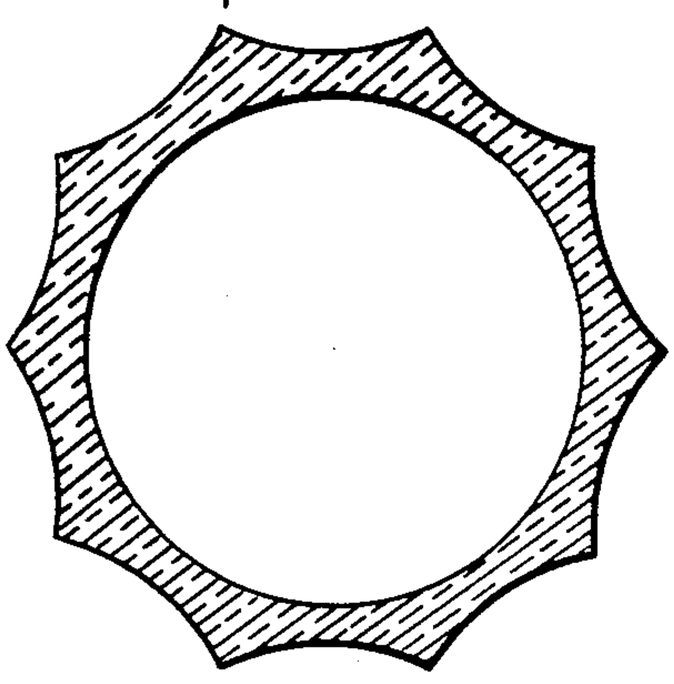
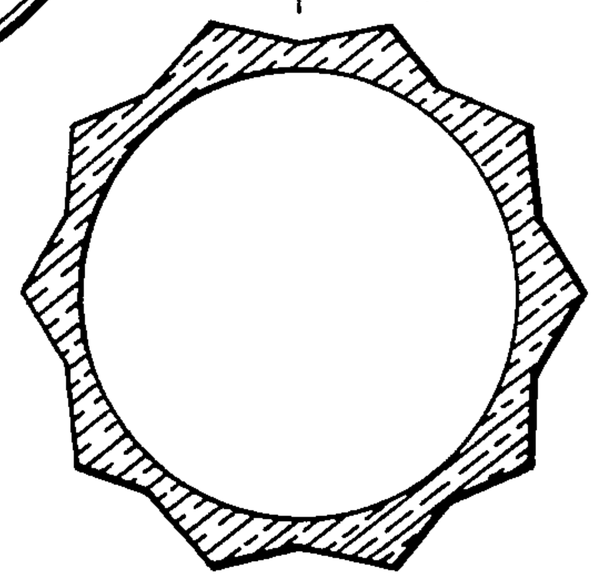
Fig.5.