United States Patent [19]

Zupo

[11] **Des. 246,262**

[45] ** **Nov. 1, 1977**

[54] **COMBINED AQUARIUM AND STAND**

[76] Inventor: **Ralph A. Zupo,** 1818 Coronado Ave., Youngstown, Ohio 44504

[**] Term: **14 Years**

[21] Appl. No.: **735,109**

[22] Filed: **Oct. 22, 1976**

[51] **Int. Cl.** ..... **D30—02**
[52] **U.S. Cl.** **D30/8**
[58] **Field of Search** D30/6–12; 119/5

[56] **References Cited**

U.S. PATENT DOCUMENTS

3,927,643	12/1975	Ritzow et al.	119/5
D. 37,181	10/1904	Hundorf	D30/10
D. 53,718	8/1919	Stein	D30/10
D. 85,413	10/1931	Castetter	D30/8
D. 234,087	1/1975	Johnson	D30/8
D. 236,839	9/1975	Polli	D30/8

Primary Examiner—James R. Largen
Attorney, Agent, or Firm—Webster B. Harpman

[57] **CLAIM**

The ornamental design for a combined aquarium and stand, as shown.

DESCRIPTION

FIG. **1** is a perspective view of a combined aquarium and stand showing my new design; and
FIG. **2** is a side elevational view thereof.

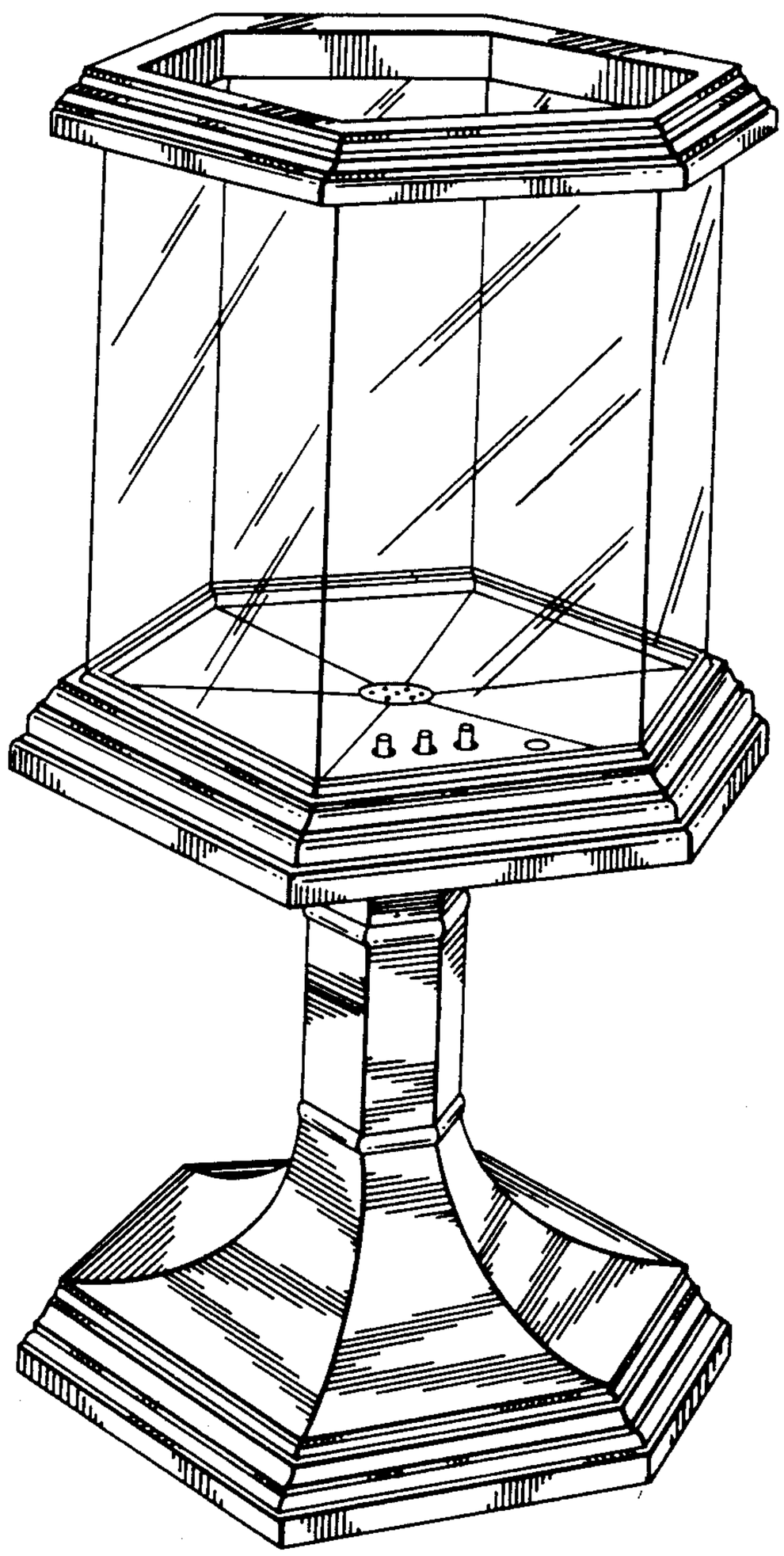

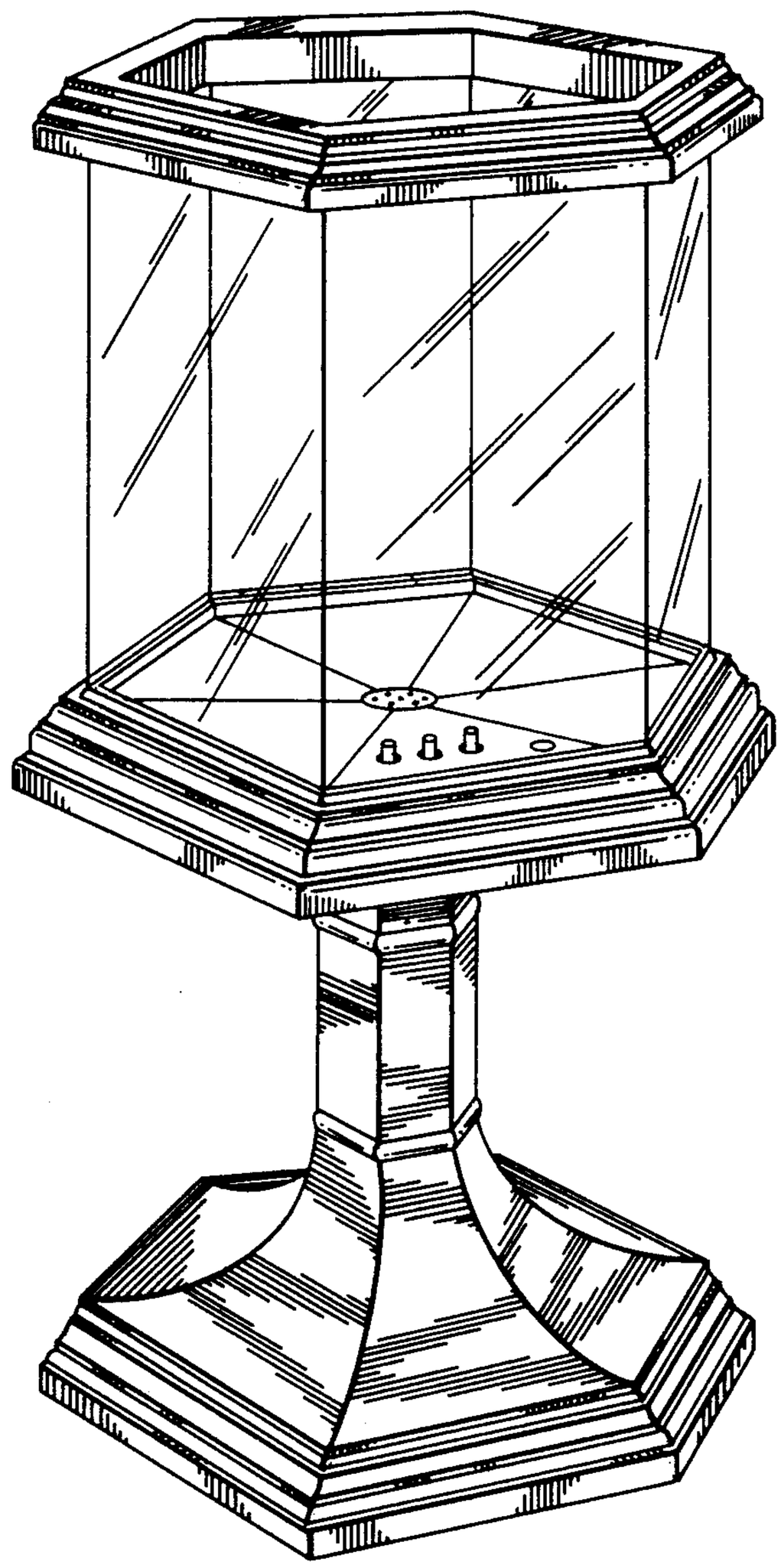

FIG. 1

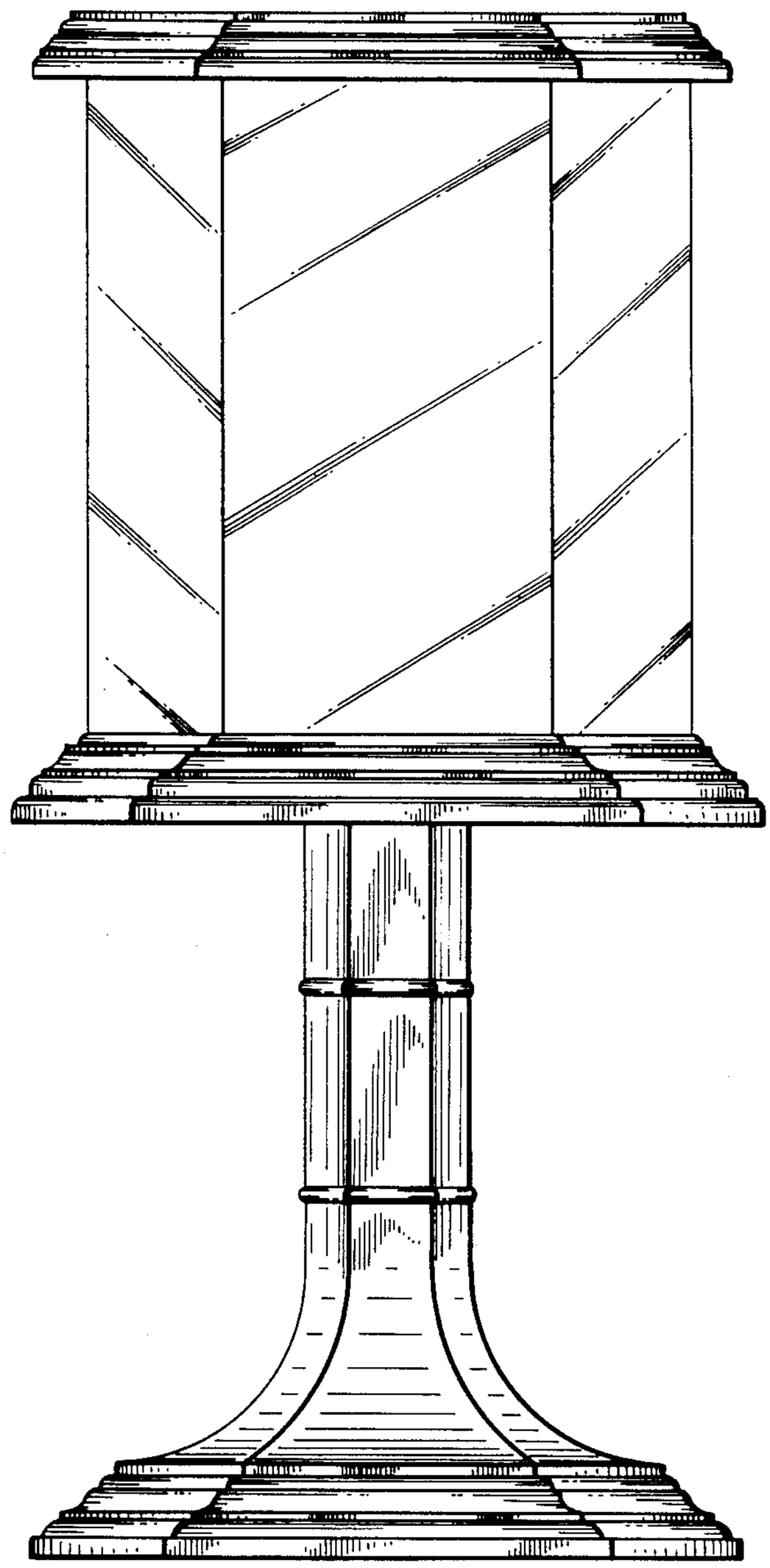

FIG. 2