United States Patent [19]

Huber

[11] **Des. 242,862**

[45] ** **Dec. 28, 1976**

[54] **ELECTRICAL CONNECTOR HOUSING**

[75] Inventor: **John Henry Huber,** Harrisburg, Pa.

[73] Assignee: **AMP Incorporated,** Harrisburg, Pa.

[**] Term: **14 Years**

[21] Appl. No.: **616,353**

[22] Filed: **Sept. 24, 1975**

[51] **Int. Cl.** ..... **D13—03**

[52] **U.S. Cl.** ..... **D26/1 A**

[58] **Field of Search** ..... D26/1 R, 1 A, 1 D, 1 E, D26/5 R, 1 B; 339/17 LM, 17 M, 18 R, 18 B, 198 R, 198 G, 103 R, 103 C, 103 M, 107

[56] **References Cited**

U.S. PATENT DOCUMENTS

3,149,893	9/1964	Dupre	339/17 LM X
3,634,816	1/1972	Zell	339/17 M X
3,854,787	12/1974	Snyder	339/103 R

Primary Examiner—Susie J. Mercer
Attorney, Agent, or Firm—William J. Keating

[57] **CLAIM**

The ornamental design for an electrical connector housing, as shown and described.

DESCRIPTION

FIG. 1 is a perspective view of an electrical connector housing showing my new design;
FIG. 2 is a front elevational view thereof;
FIG. 3 is a top plan view thereof;
FIG. 4 is a rear elevational view thereof; and
FIG. 5 is a side elevational view thereof.
The sockets are partially shown in FIG. 1 for convenience of illustration, it being understood that the sockets would normally appear as shown in FIG. 2.

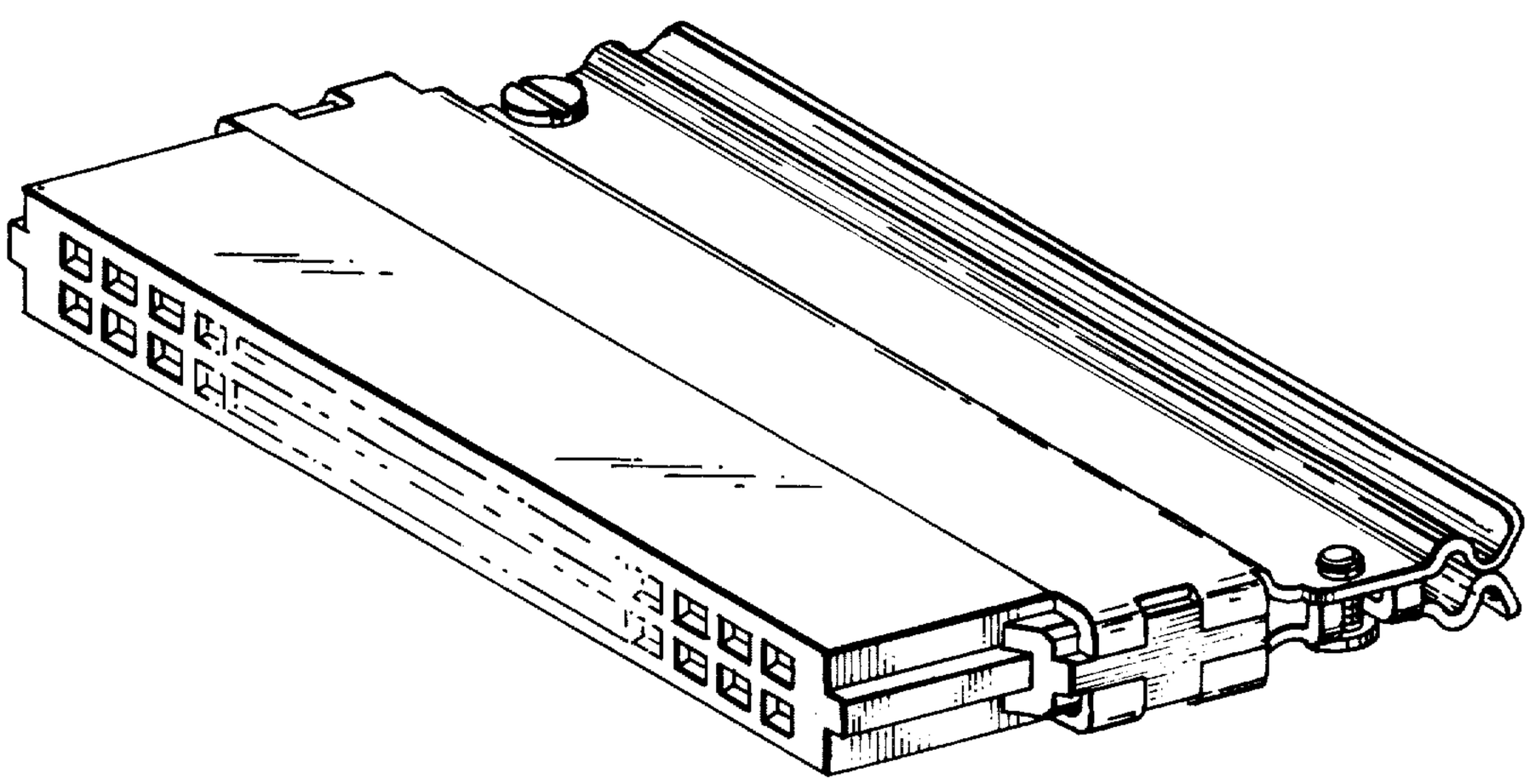

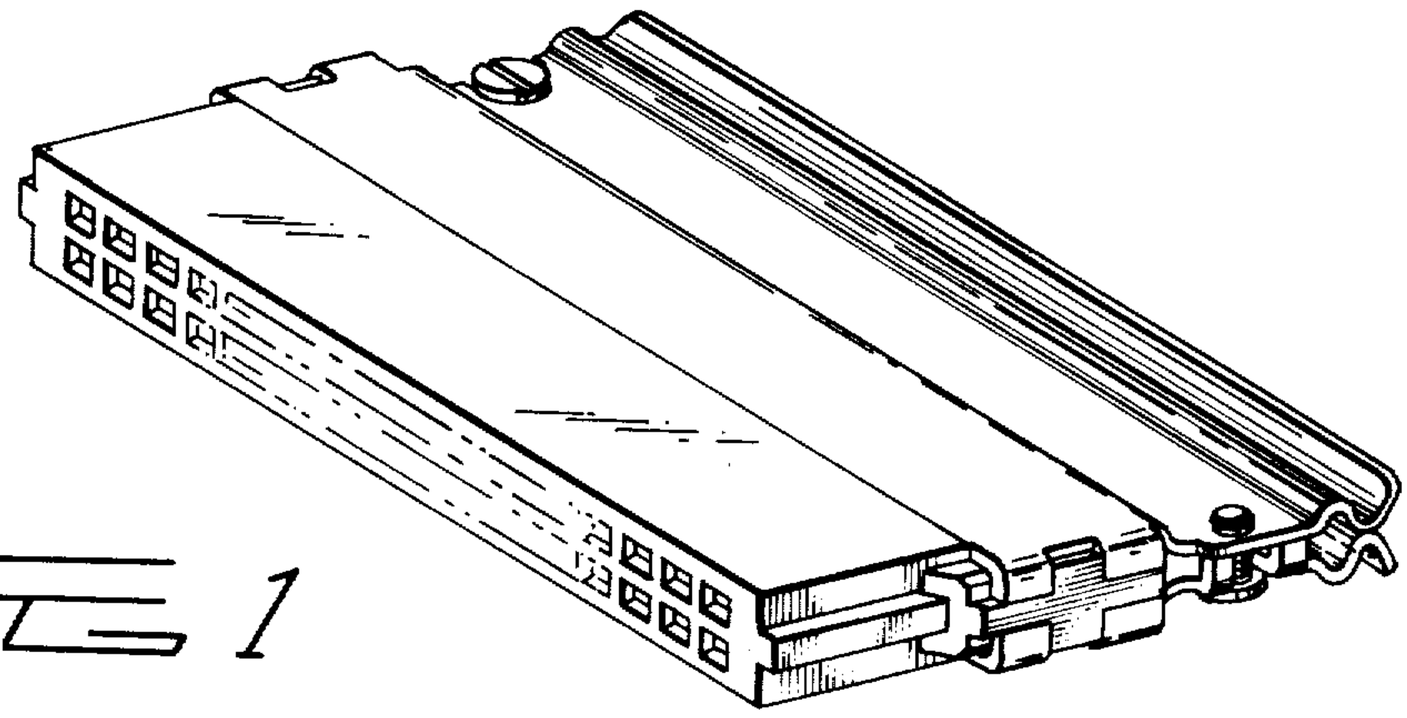

FIG. 1

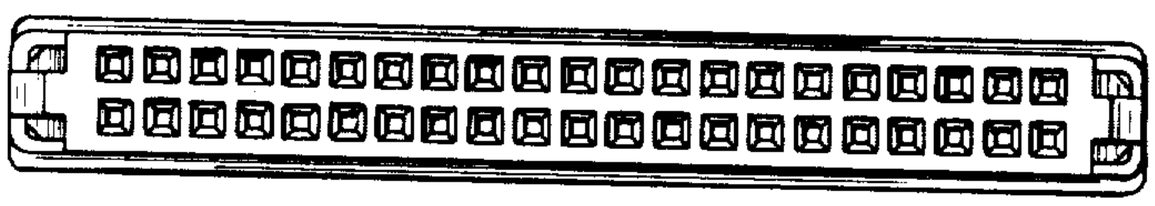

FIG. 2

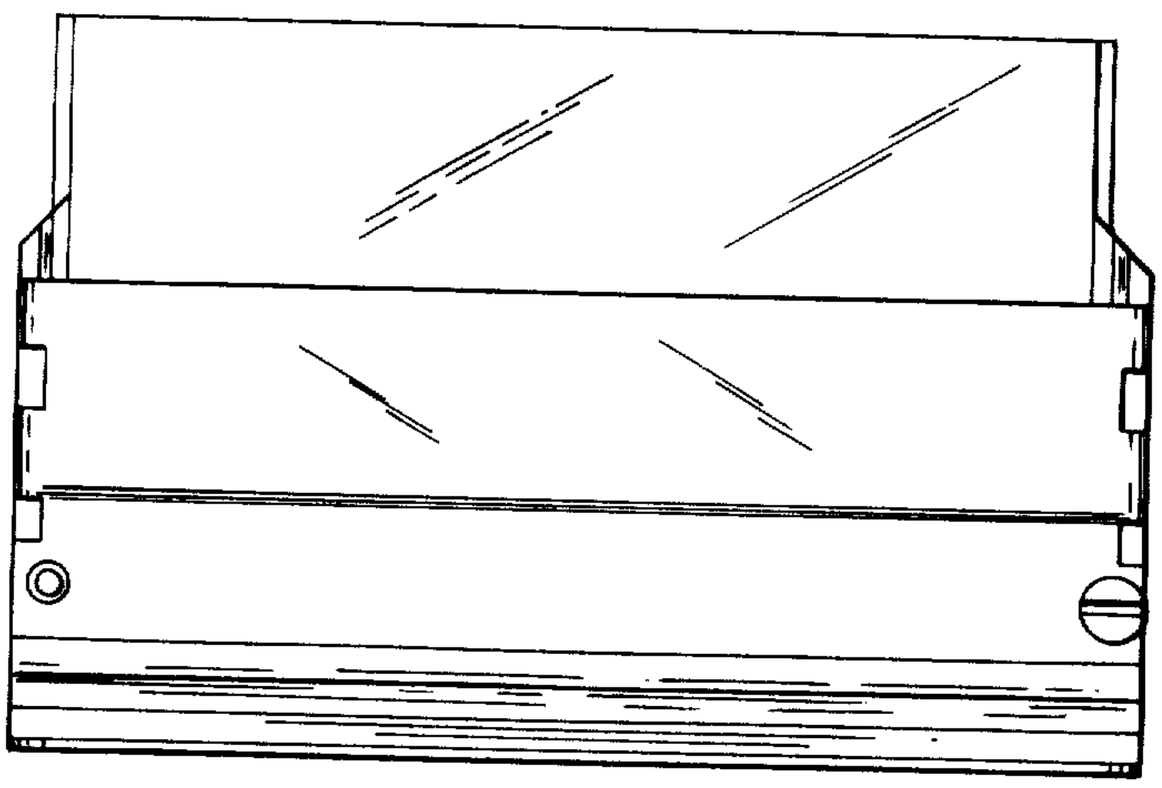

FIG. 3

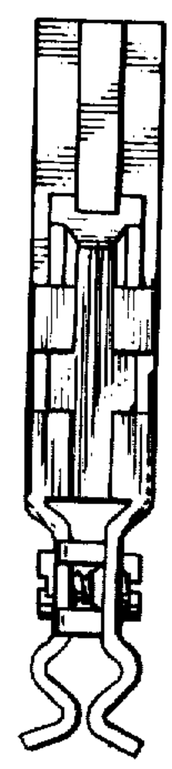

FIG. 5

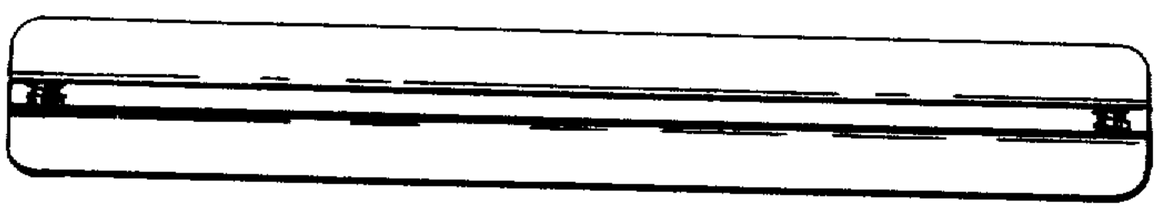

FIG. 4