US0D1136829S

(12) United States Design Patent

Holmes

(10) Patent No.: US D1,136,829 S
(45) Date of Patent: ** Jul. 28, 2026

(54) **DUAL COLLAR**

(71) Applicant: **Quality Plastics Inc.**, Sparks, NV (US)

(72) Inventor: **Steven L Holmes**, Reno, NV (US)

(73) Assignee: **Quality Plastics, Inc.**, Sparks, NV (US)

(**) Term: **15 Years**

(21) Appl. No.: **29/898,745**

(22) Filed: **Jul. 31, 2023**

(51) **LOC (15) Cl.** **08-01**

(52) **U.S. Cl.**
USPC **D8/1**

(58) **Field of Classification Search**
USPC D8/1, 349, 354, 355, 356, 360.1, 373
CPC A01G 17/04; A01G 17/06; A01G 17/08; A01G 17/14; A01G 5/00; A01G 9/00; A01G 9/12; F16B 2/22
See application file for complete search history.

(56) **References Cited**

U.S. PATENT DOCUMENTS

3,805,340	A *	4/1974	Bush	A01G 17/12	24/543
4,622,775	A	11/1986	Glenn et al.		
D303,610	S *	9/1989	Mastandrea	D8/1	
5,979,110	A *	11/1999	Tai	A01G 9/128	24/339
D418,725	S *	1/2000	Evans	D8/1	
D420,554	S *	2/2000	Evans	D8/1	
D510,511	S *	10/2005	Gall	D8/1	
D559,080	S *	1/2008	Boote	D8/354	
8,006,433	B1 *	8/2011	Bryanton	A01G 9/12	47/45
D674,269	S *	1/2013	Siepel	D8/354	
D676,722	S *	2/2013	Clancy	D8/1	
D704,011	S *	5/2014	Velez	D8/1	
D706,589	S *	6/2014	Seo	D7/693	
D856,786	S *	8/2019	Stapleton	D8/382	
D1,000,919	S *	10/2023	Friesen	D8/1	
D1,028,649	S *	5/2024	de Jong	D8/1	
D1,103,719	S *	12/2025	Zhao	D8/349	
2007/0137100	A1 *	6/2007	Beeman	A01G 9/00	47/65.7
2023/0232755	A1 *	7/2023	De Jong	F16B 2/22	47/44

OTHER PUBLICATIONS

"Turboklone Twin Collars" Dec. 12, 2025, turboklone.com, site visited Dec. 12, 2025: https://www.turboklone.com/products/turboklone-twin-collars (Year: 2025).*

EZ-Clone(R) Infinity Collar(TM) product description retrieved from the Internet on Dec. 6, 2023, at https://ezclone.com/product/ez-clone-infinity-collars/, 1 page.

* cited by examiner

Primary Examiner — Joseph Kukella
Assistant Examiner — Rene H. Kadoo
(74) *Attorney, Agent, or Firm* — Lowe Graham Jones PLLC

(57) **CLAIM**

The ornamental design for the dual collar, as shown and described.

DESCRIPTION

FIG. **1** is an isometric view of the dual collar of the present invention.
FIG. **2** is a front elevational view of the dual collar.
FIG. **3** is a rear elevational view of the dual collar.
FIG. **4** is a right-side elevational view of the dual collar.
FIG. **5** is a left-side elevational view of the dual collar.
FIG. **6** is a top view of the dual collar; and,
FIG. **7** is a bottom view of the dual collar.

1 Claim, 4 Drawing Sheets

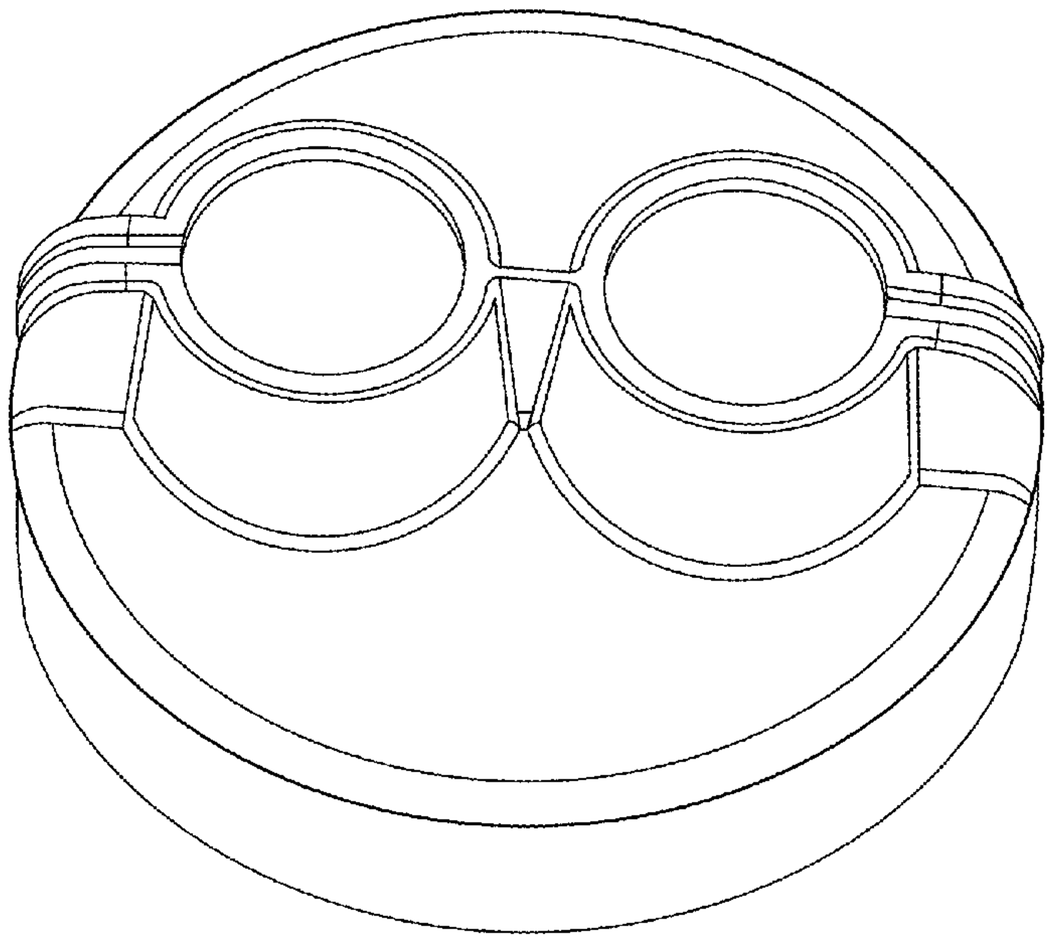

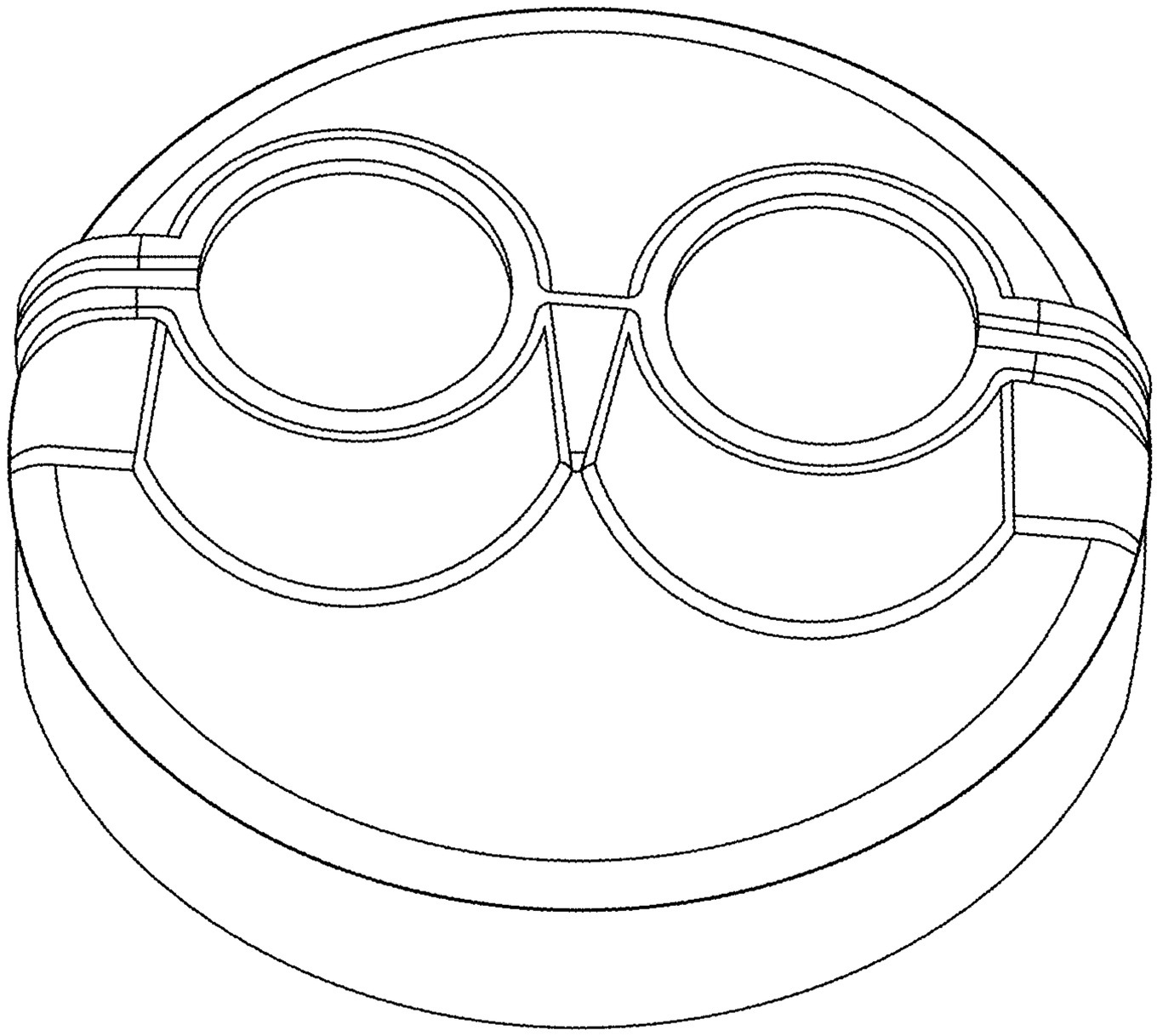

FIG. 1

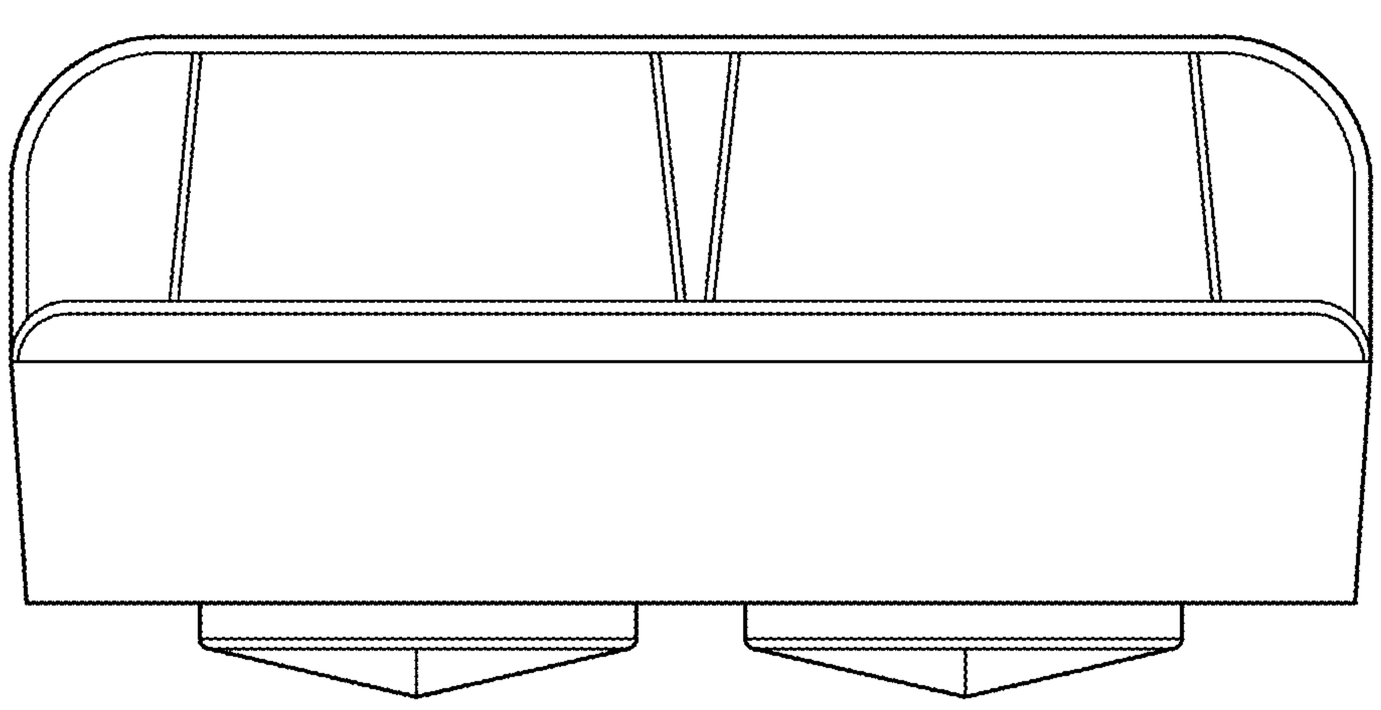

FIG. 2

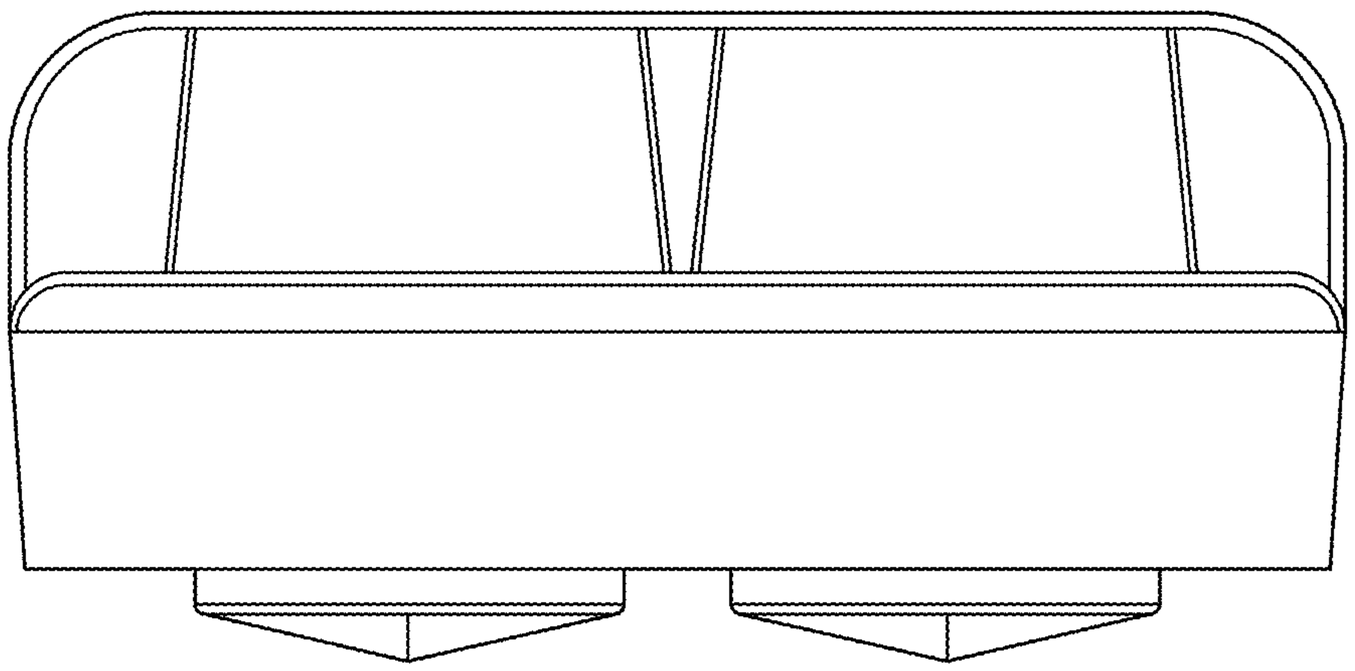

FIG. 3

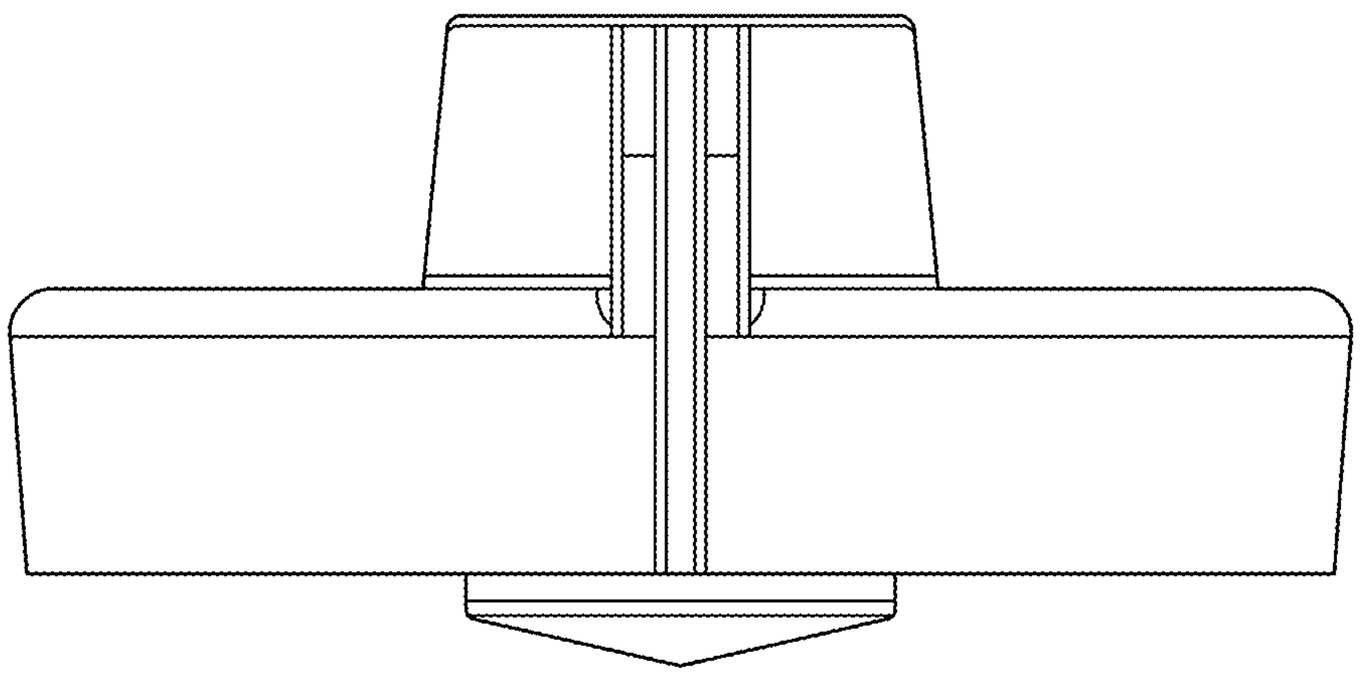

FIG. 4

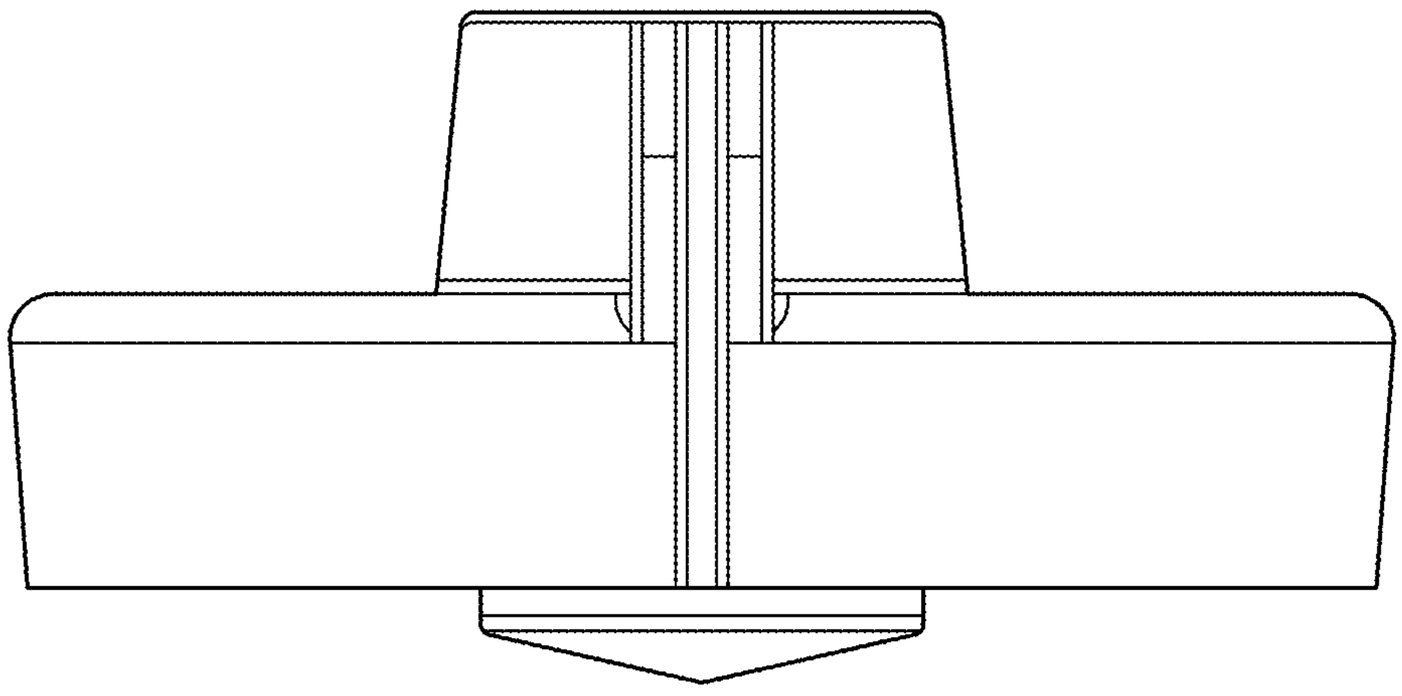

FIG. 5

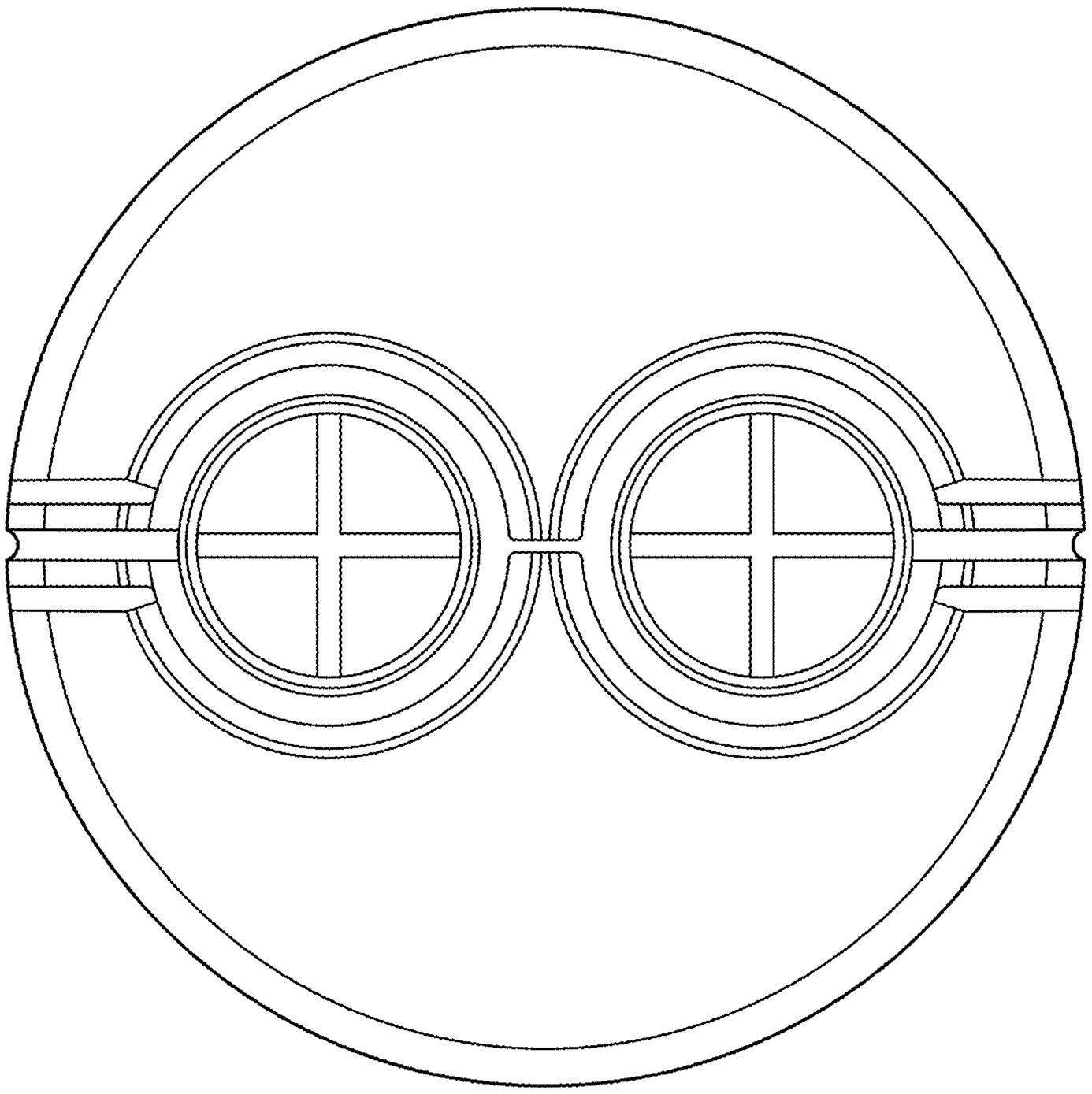

FIG. 6

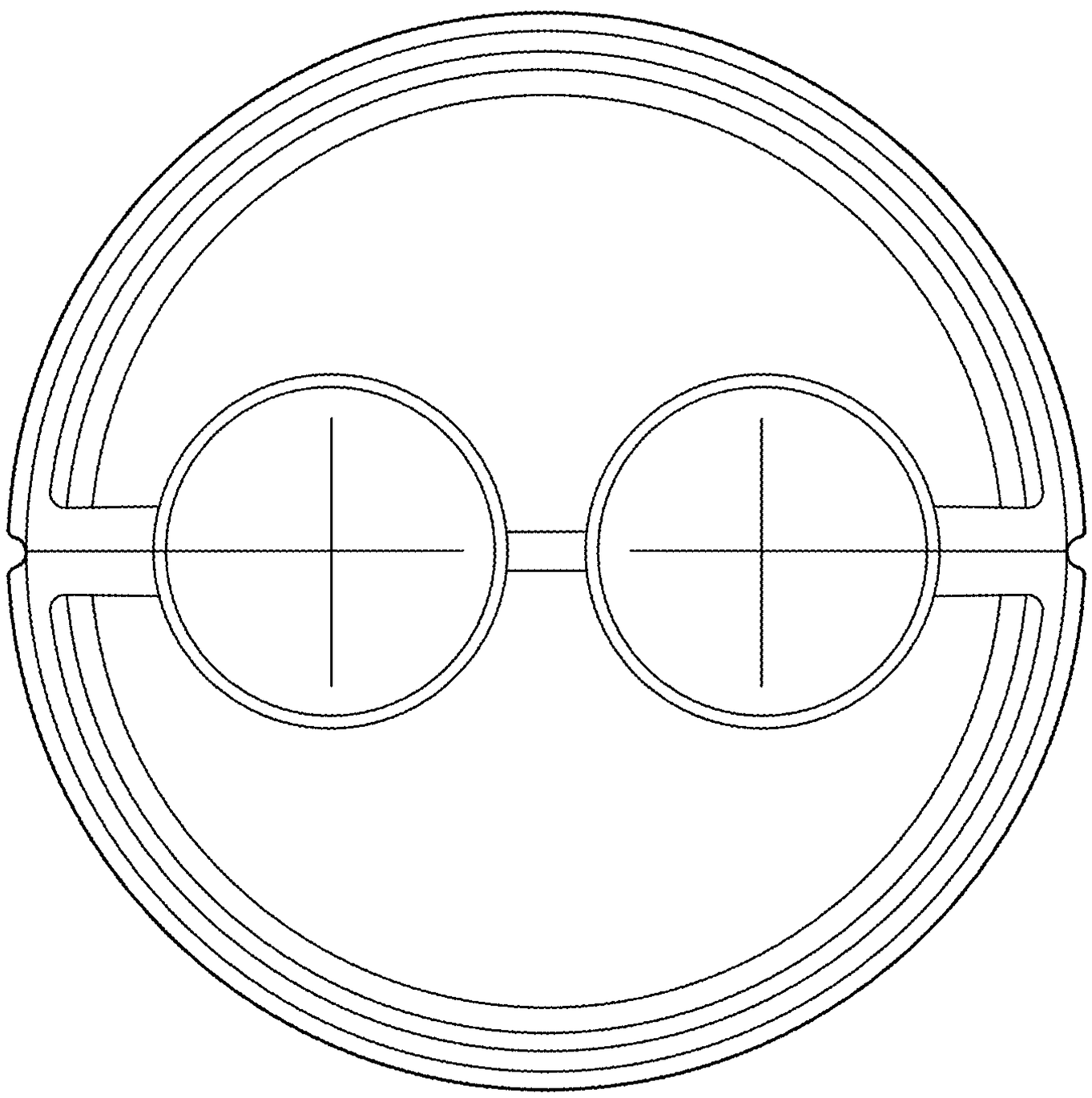

FIG. 7