US0D1136810S

(12) United States Design Patent

Liang et al.

(10) Patent No.: US D1,136,810 S
(45) Date of Patent: ** Jul. 28, 2026

(54) **SPICE RACK BASKET**

(71) Applicant: **Guangdong Nuomi Home Intelligent Technology Co., Ltd**, Foshan (CN)

(72) Inventors: **Yongjian Liang**, Foshan (CN); **Huanchang Su**, Foshan (CN)

(73) Assignee: **Guangdong Nuomi Home Intelligent Technology Co., Ltd**, Foshan (CN)

(**) Term: **15 Years**

(21) Appl. No.: **29/987,004**

(22) Filed: **Jan. 21, 2025**

(30) **Foreign Application Priority Data**

Dec. 19, 2024 (CN) 202430809349.4

(51) **LOC (15) Cl.** **07-09**

(52) **U.S. Cl.**
USPC **D7/600.4**

(58) **Field of Classification Search**
USPC ... D7/600.1–600.4, 707, 630, 387–389, 505, D7/589, 550.1, 553.1; D6/515, 675.1, D6/672, 310; D9/737, 747, 749
CPC .. A47F 5/04; A47F 5/05; A47G 19/08; A47G 19/23; A47G 2019/2277; A47G 23/03; A47G 23/0225
See application file for complete search history.

(56) **References Cited**

U.S. PATENT DOCUMENTS

D956,480 S * 7/2022 Klein D7/600.4
D964,075 S * 9/2022 Zhou D6/675.1
D968,904 S * 11/2022 Huang D7/600.4
D970,975 S * 11/2022 Zhou D7/600.4
D971,652 S * 12/2022 Lin D6/675.1
D1,000,168 S * 10/2023 Zeng B25H 3/028 D3/313
D1,003,088 S * 10/2023 Wang D6/675.1
D1,003,115 S * 10/2023 Luo D7/600.4
D1,018,052 S * 3/2024 Chen D3/313
D1,019,222 S * 3/2024 Dai D3/313
D1,025,539 S * 4/2024 Lin D6/675.1
D1,047,537 S * 10/2024 Yu D6/675.1
(Continued)

OTHER PUBLICATIONS

[China CN305549722S], Publication Date Jan. 14, 2020, retrieved on Feb. 23, 2026, retrieved from Huang Jianrong (Year: 2020).*
(Continued)

Primary Examiner — Catherine S Posthauer
Assistant Examiner — Christine Marie Achen Zimmerman

(57) **CLAIM**

The ornamental design for a spice rack basket as shown and described.

DESCRIPTION

FIG. **1** is a top, front and left side perspective view of a spice rack basket showing our new design;
FIG. **2** is a bottom, rear and right side perspective view thereof;
FIG. **3** is a front elevational view thereof;
FIG. **4** is a rear elevational view thereof;
FIG. **5** is a left side view thereof;
FIG. **6** is a right side view thereof;
FIG. **7** is a top plan view thereof;
FIG. **8** is a bottom plan view thereof;
FIG. **9** is an enlarged view of portion **9** in FIG. **1**;
FIG. **10** is an enlarged view of portion **10** in FIG. **1**; and,
FIG. **11** is an enlarged view of portion **11** in FIG. **2**.
The evenly dashed broken lines in the drawings illustrate portions of the spice rack basket which form no part of the claimed design.
The unevenly dashed broken lines illustrate the boundary of the enlarged views and form no part of the claimed design.

1 Claim, 11 Drawing Sheets

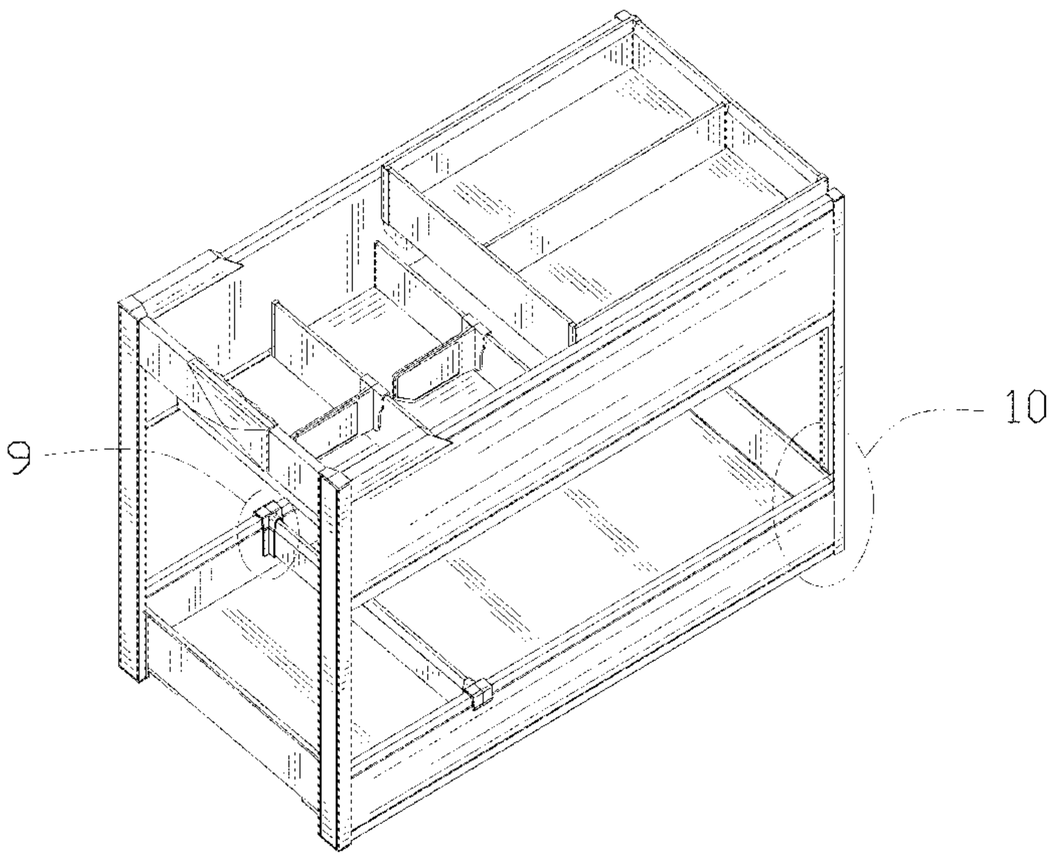

(56) **References Cited**

U.S. PATENT DOCUMENTS

D1,051,643	S	*	11/2024	Jin	D6/675.1
D1,052,352	S	*	11/2024	Pandolfi Fernandez	D7/600.4
D1,096,461	S	*	10/2025	Leng	D6/675.1

OTHER PUBLICATIONS

[China CN306710116S], Publication Date Jul. 27, 2021, retrieved on Feb. 23, 2026, retrieved from Huang Jianrong (Year: 2021).*

"DABIGE Pull Out Spice Rack" available Feb. 11, 2023, [online], [site visited Mar. 4, 2026]. Retrieved from Internet, URL:https://www.amazon.com/DABIGE-Organizer-Cabinet-Organizers-4-33Wx10-4Dx8-5H/dp/B0CSFM5X73? (Year: 2023).*

"ROOMTEC Pull Out Cabinet Organizer" available Dec. 1, 2023, [online], [site visited Mar. 4, 2026]. Retrieved from Internet, URL:https://www.amazon.com/ROOMTEC-Cabinet-Organizer-Kitchen-Storage/dp/B0CP8QHJVZ? (Year: 2023).*

* cited by examiner

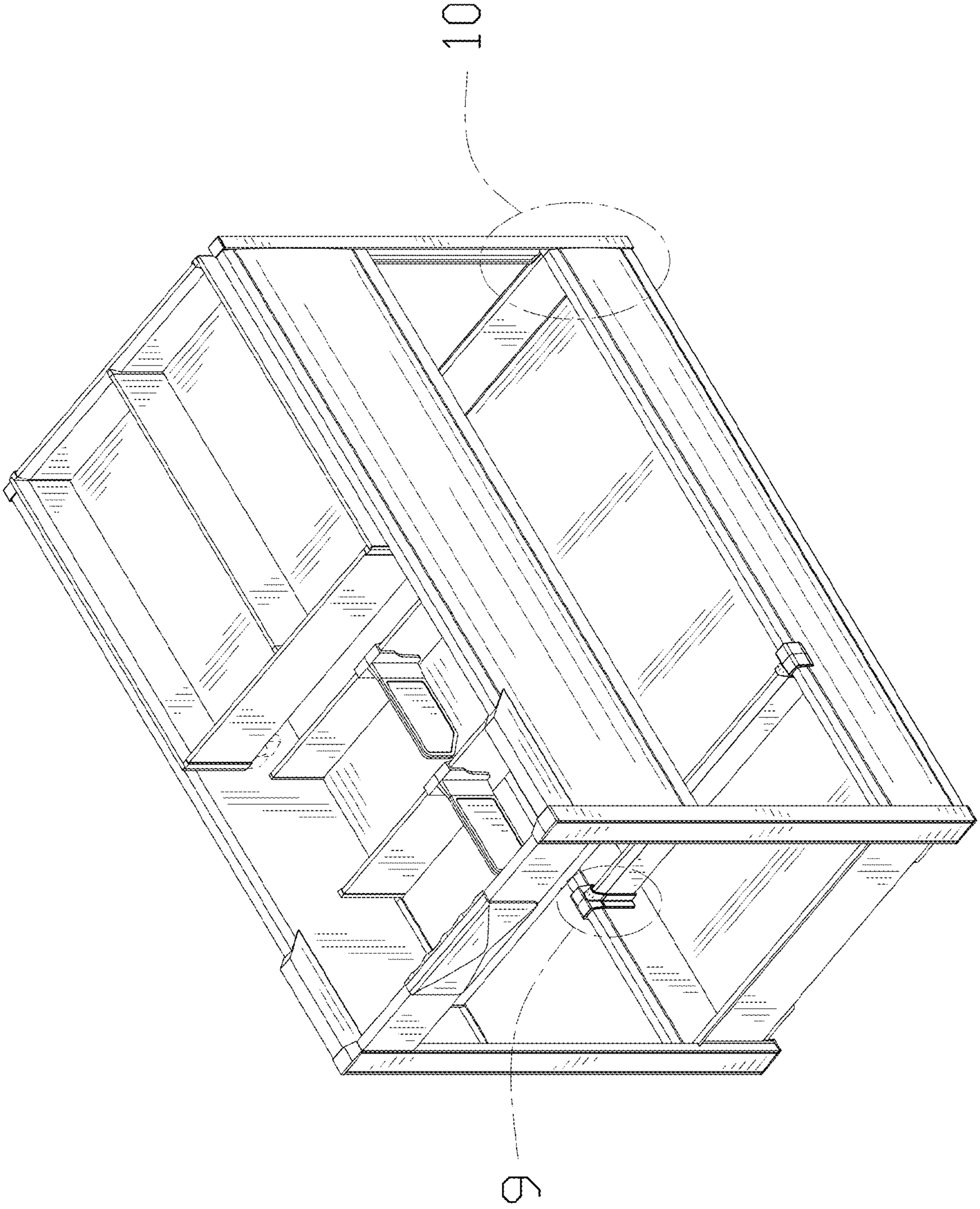

FIG. 1

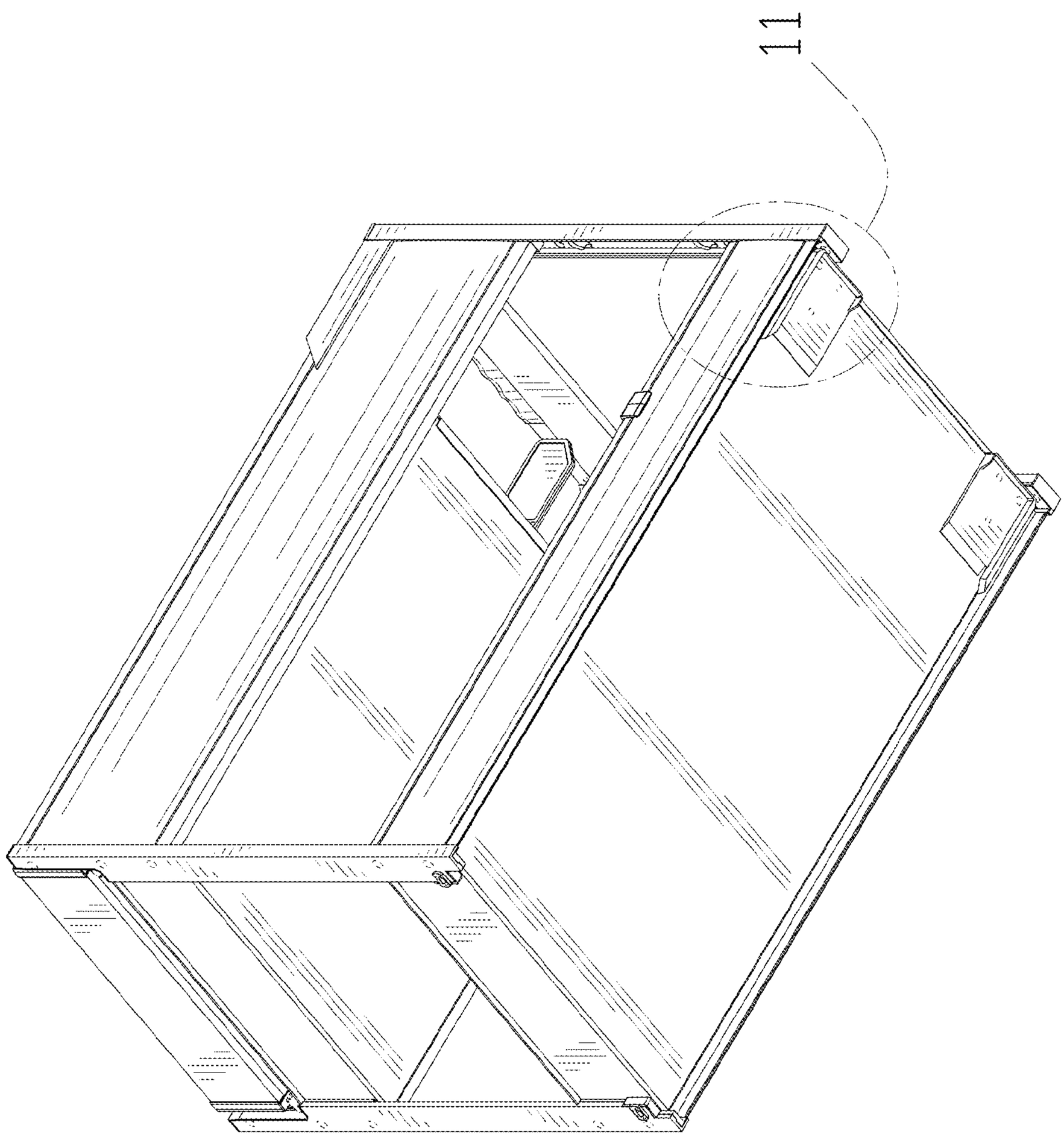

FIG. 2

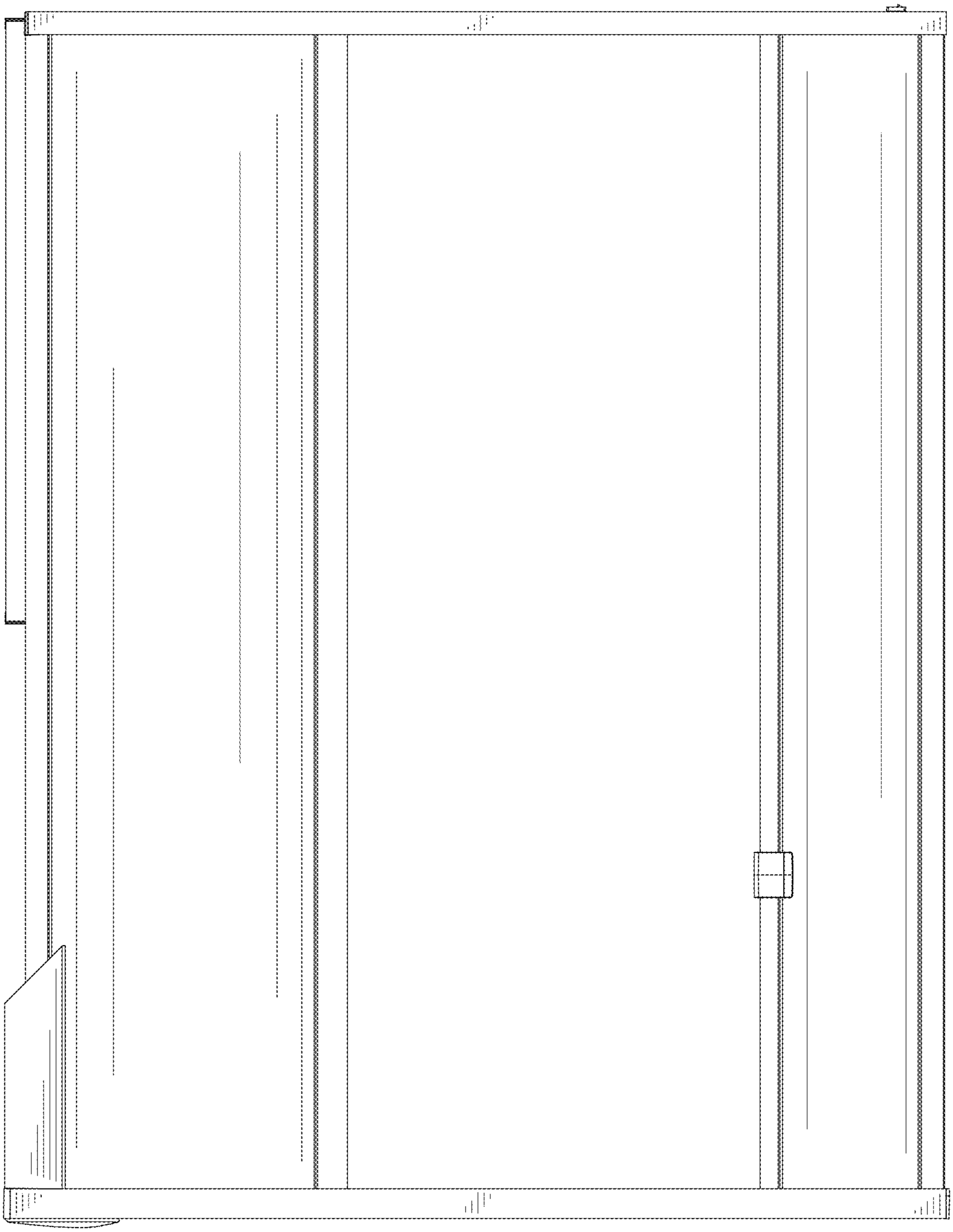

FIG. 3

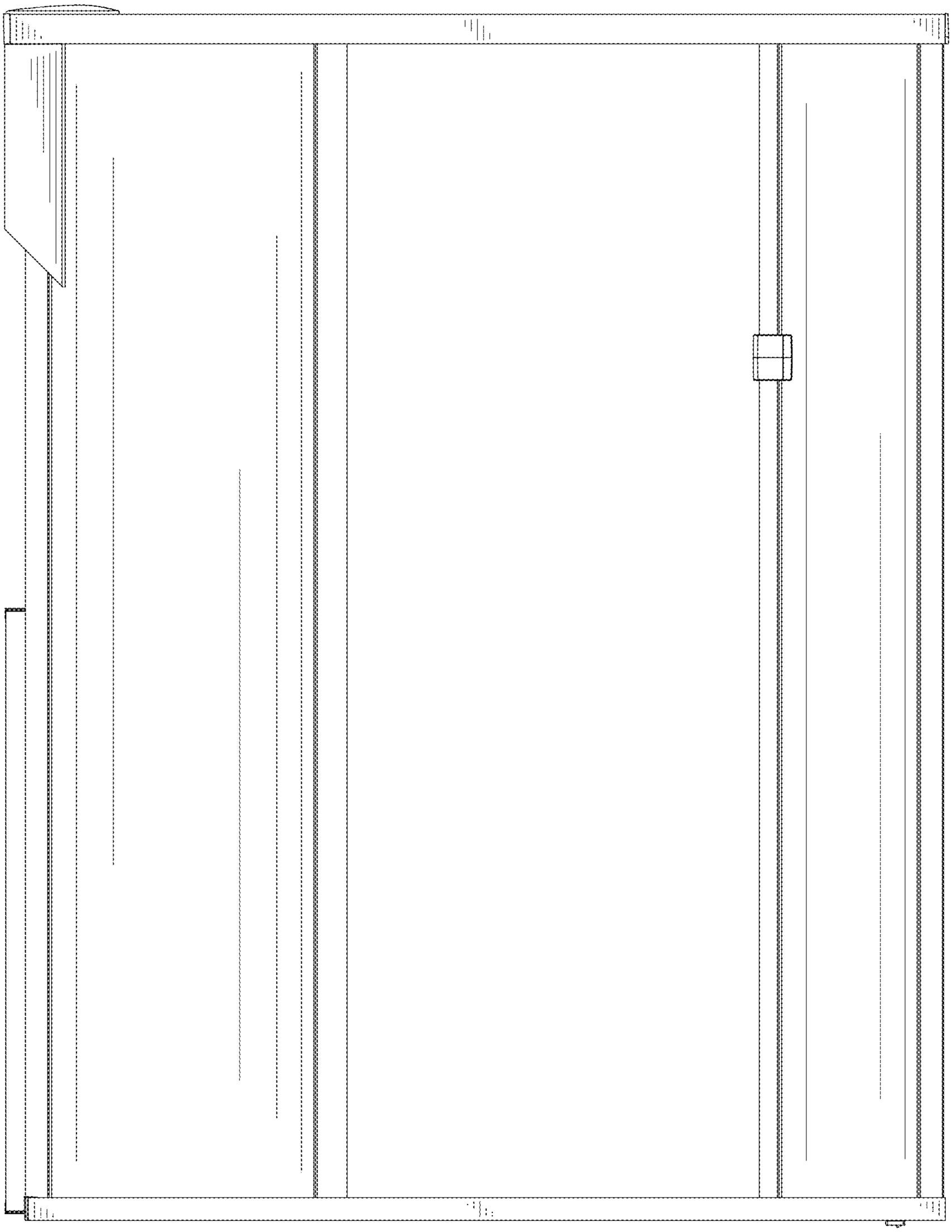

FIG. 4

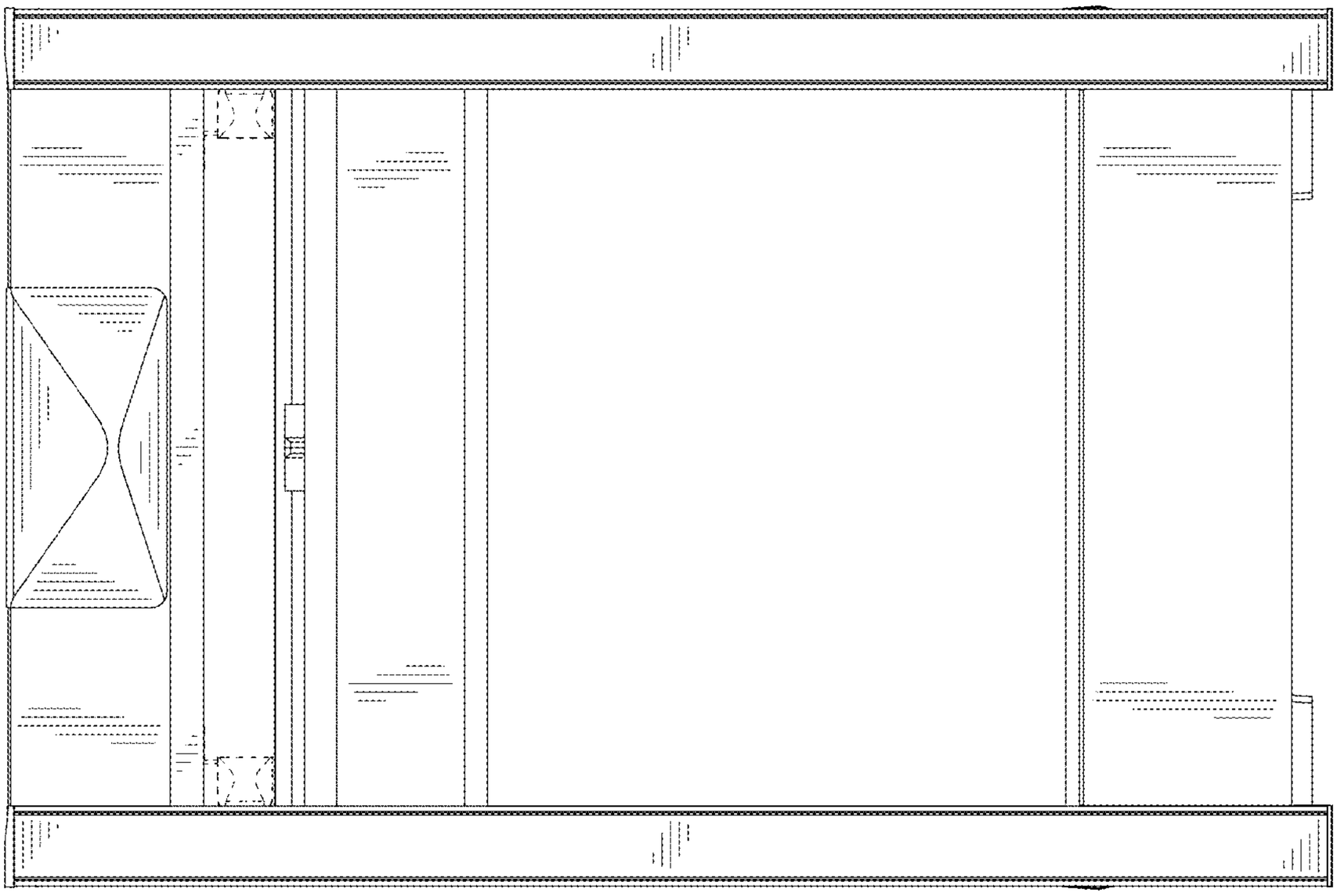

FIG. 5

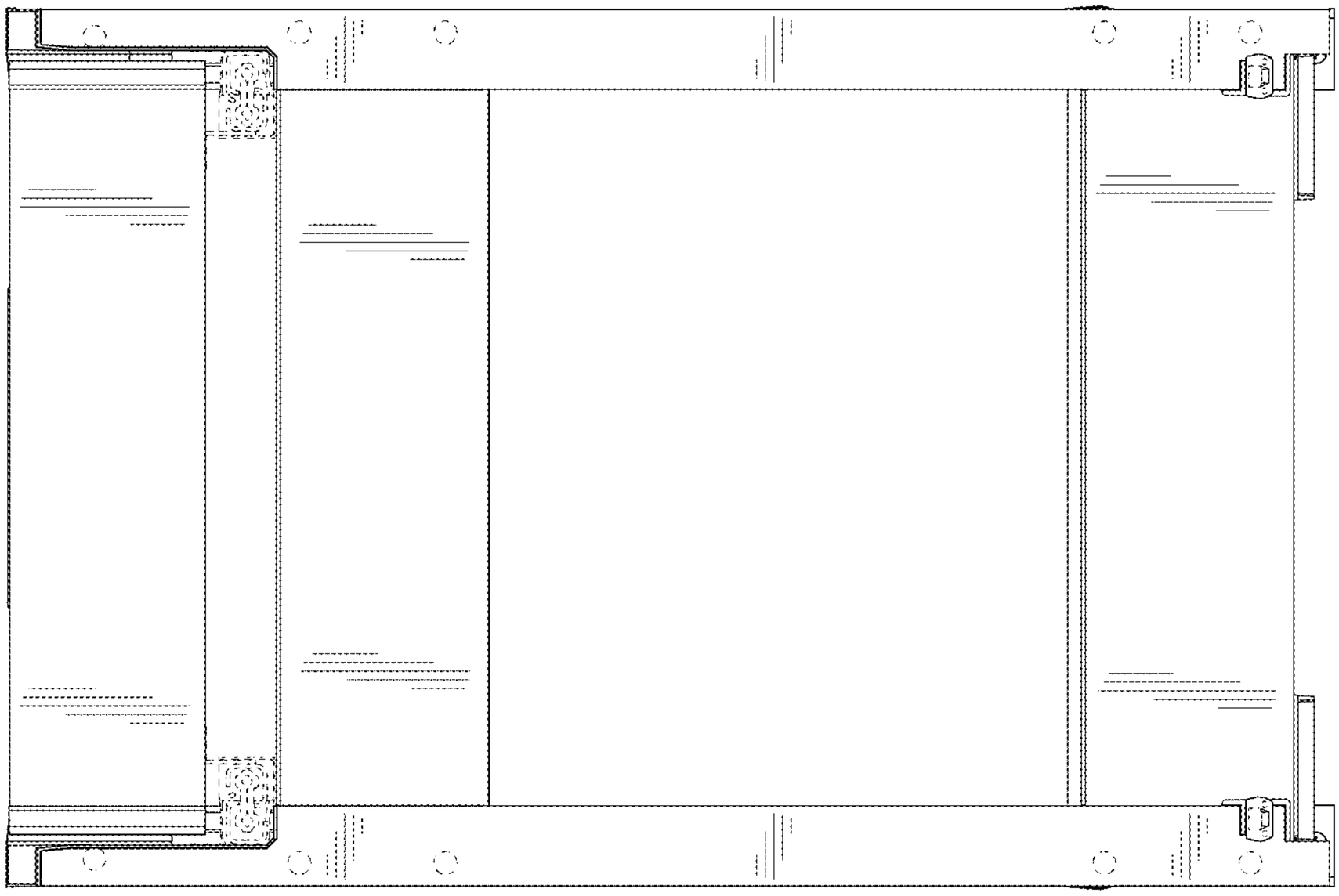

FIG. 6

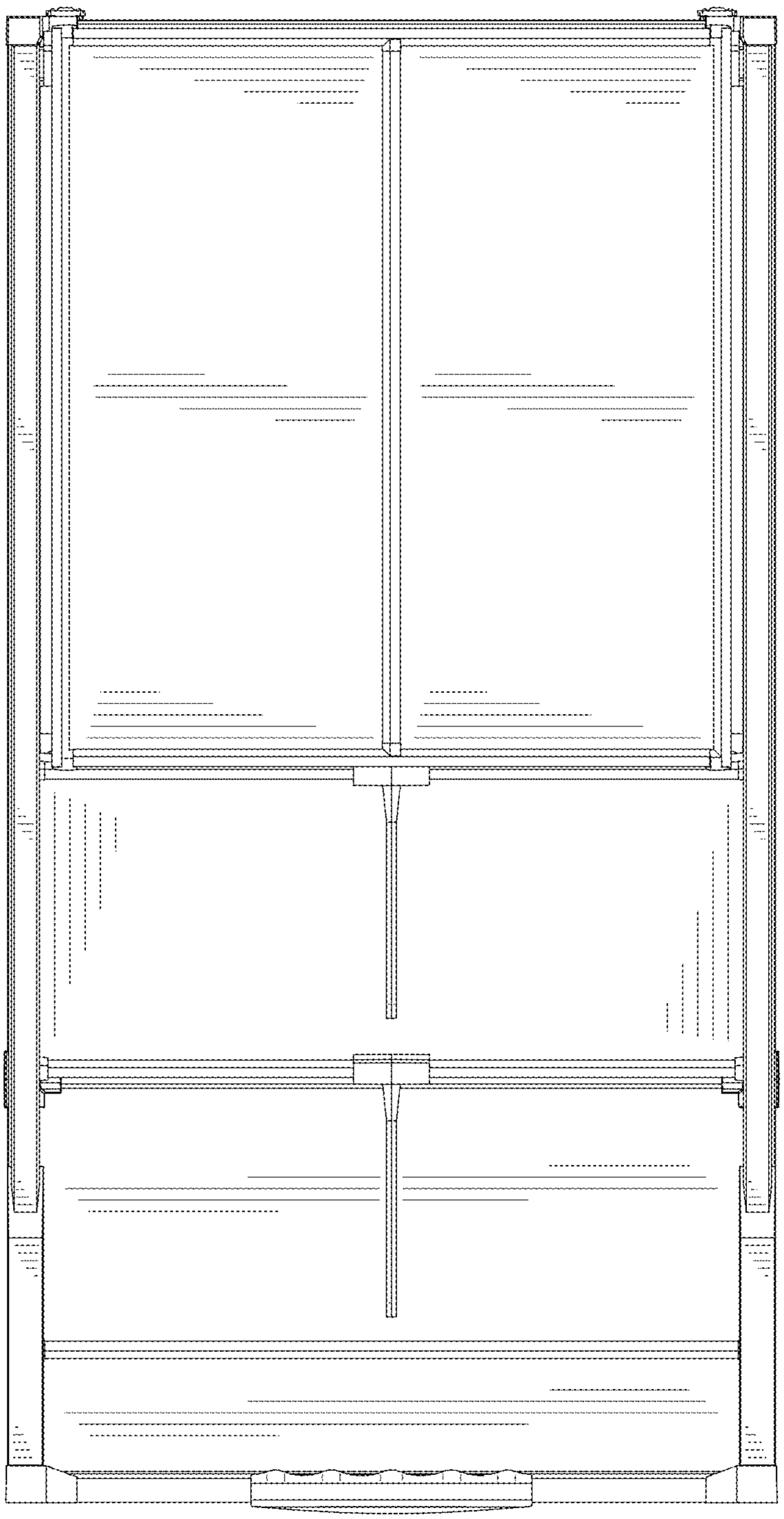

FIG. 7

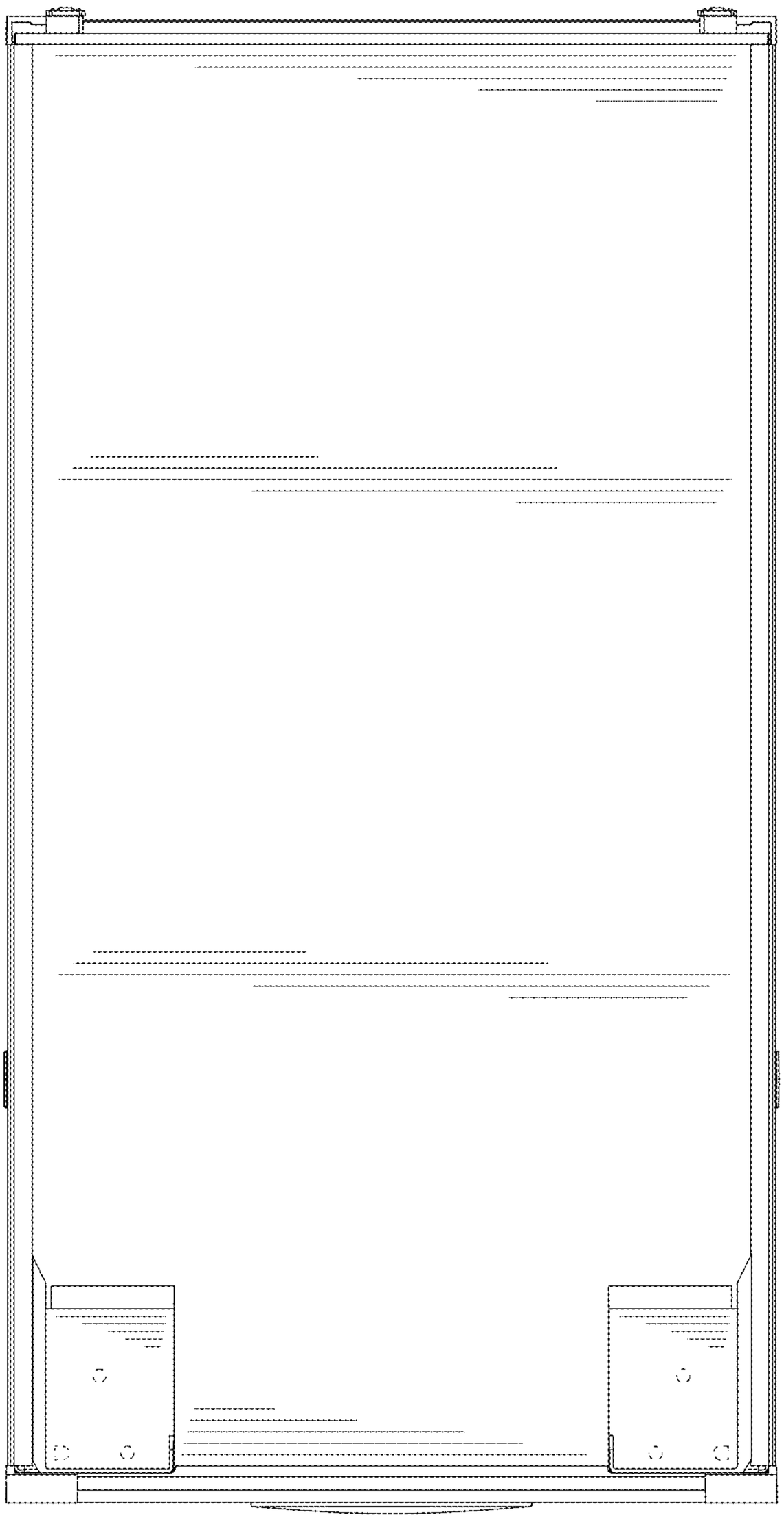

FIG. 8

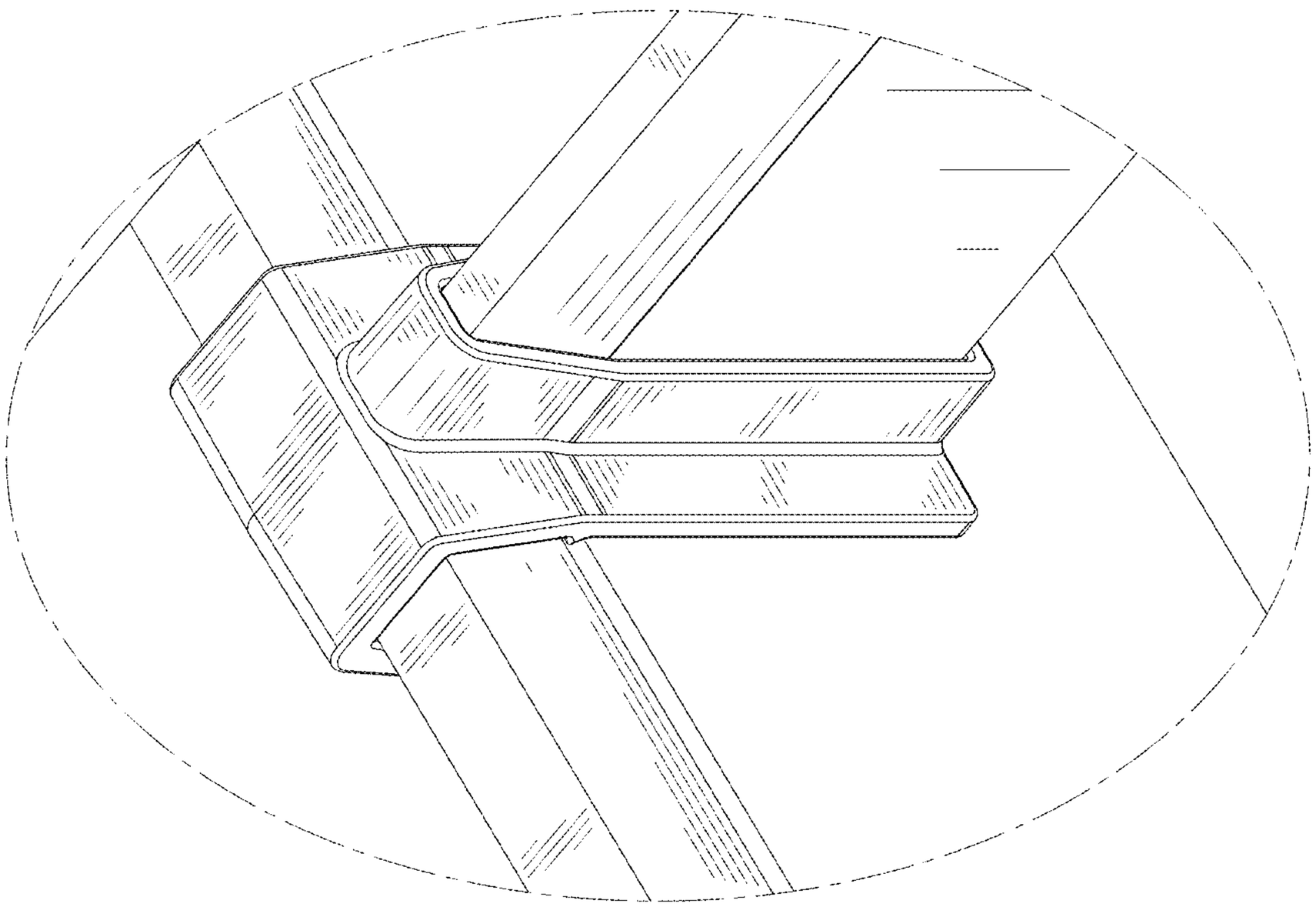

FIG. 9

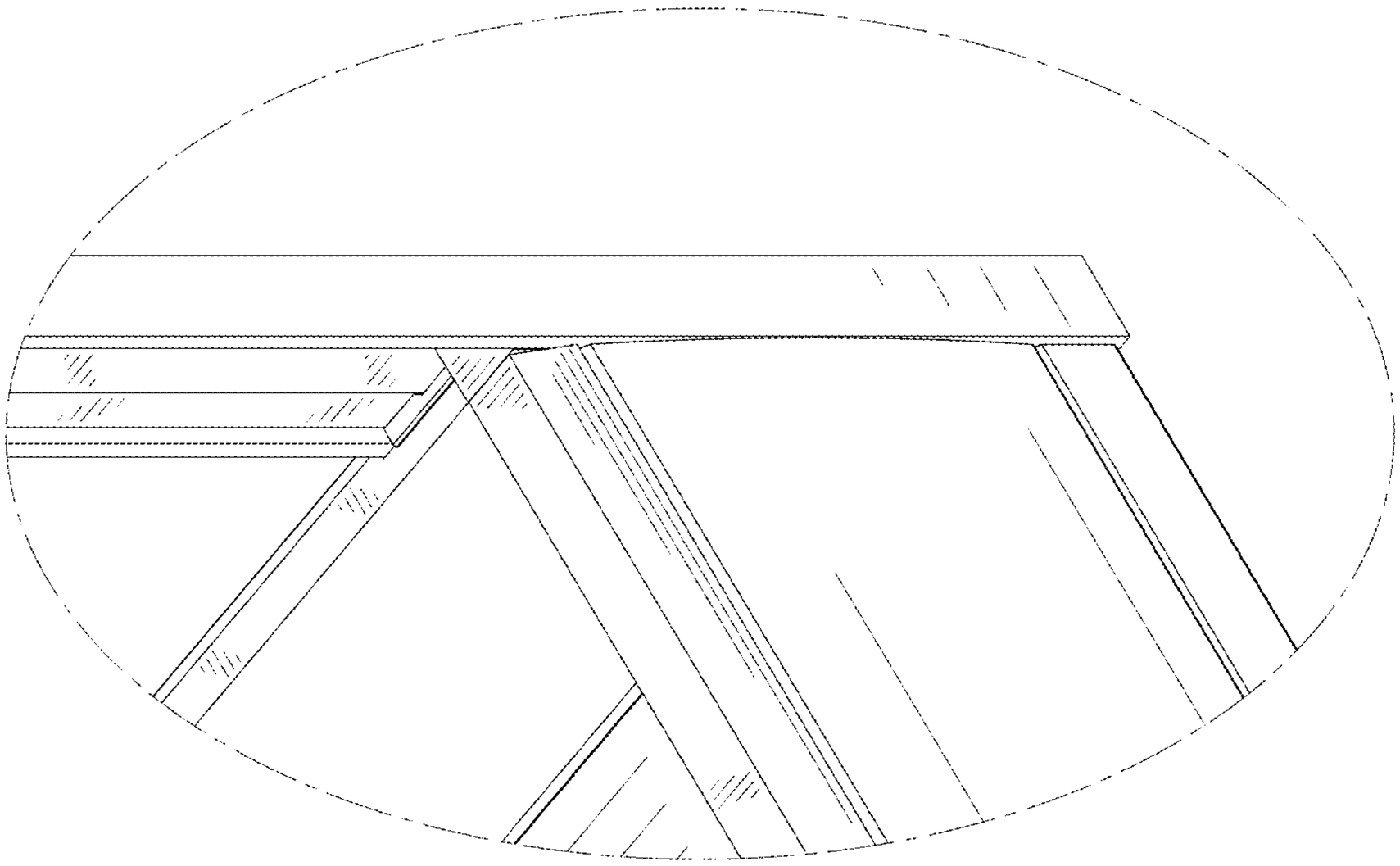

FIG. 10

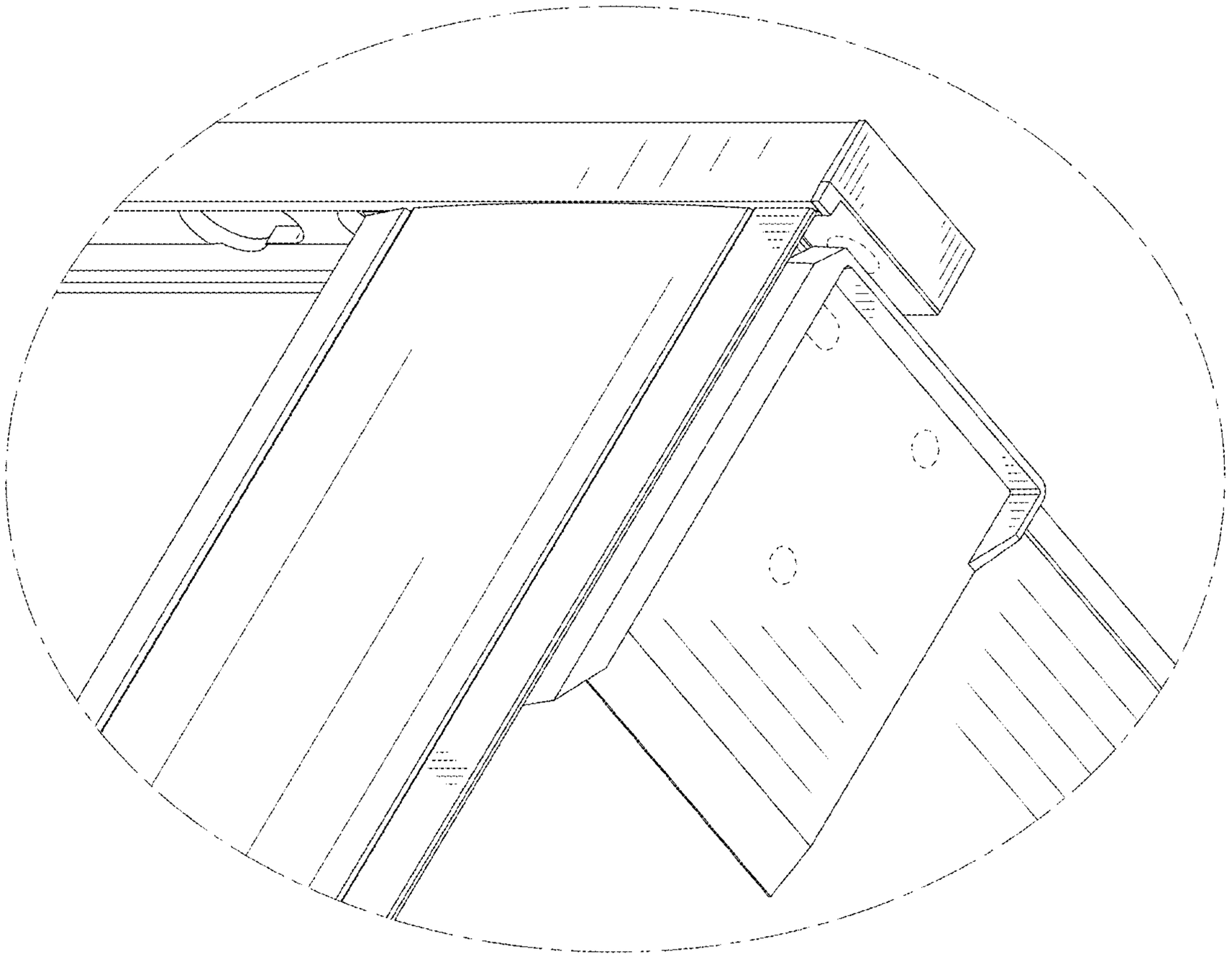

FIG. 11