US0D1108564S

(12) United States Design Patent

Dunahay

(10) Patent No.: US D1,108,564 S
(45) Date of Patent: ** Jan. 6, 2026

(54) **WALL MOUNT FOR PULL UP BAR**

(71) Applicant: **Coulter Ventures, LLC.**, Columbus, OH (US)

(72) Inventor: **Nash Dunahay**, Blacklick, OH (US)

(73) Assignee: **Coulter Ventures, LLC.**, Columbus, OH (US)

(*) Notice: Patent file contains an affidavit/declaration under 37 CFR 1.130(b).

(**) Term: **15 Years**

(21) Appl. No.: **29/784,424**

(22) Filed: **May 19, 2021**

Related U.S. Application Data

(63) Continuation of application No. 29/650,226, filed on Jun. 5, 2018, now Pat. No. Des. 929,512.

(51) **LOC (15) Cl.** **21-02**

(52) **U.S. Cl.**
USPC **D21/686**; D21/694

(58) **Field of Classification Search**
USPC D6/552; D21/662, 673, 686, 691, 694; D25/41.1
CPC ... A63B 21/16; A63B 21/1618; A63B 21/169; A63B 23/1209; A63B 23/1218
See application file for complete search history.

(56) **References Cited**

U.S. PATENT DOCUMENTS

2,855,200	A	10/1958	Blickman
D269,691	S	7/1983	Ornstein et al.
D290,033	S	5/1987	Policastro
D297,957	S	10/1988	Gordon, III
4,961,295	A	10/1990	Kosch, Sr. et al.
5,046,722	A	9/1991	Antoon
5,273,506	A	12/1993	Dawson, Jr.
5,290,209	A	3/1994	Wilkinson
D355,005	S	1/1995	Voohanel, Jr.
5,776,033	A	7/1998	Brown
6,116,550	A	9/2000	Forbes
6,129,651	A	10/2000	Denaro
D486,020	S	2/2004	Hoernig
D486,337	S	2/2004	Hoernig
D514,857	S	2/2006	Hoernig
D525,668	S	7/2006	Payne
7,316,379	B1	1/2008	Graham
7,523,907	B2	4/2009	Chen
D593,169	S	5/2009	Storch
8,079,915	B2	12/2011	Spencer et al.

(Continued)

OTHER PUBLICATIONS

Jun. 7, 2022—(CN) Rejection Decision—App 201880085010.6.

(Continued)

Primary Examiner — Joseph Kukella
(74) *Attorney, Agent, or Firm* — Banner & Witcoff, Ltd.

(57) **CLAIM**

The ornamental design for a wall mount for pull up bar as shown and described.

DESCRIPTION

FIG. **1** is a top, front, left perspective view of a wall mount for pull up bar showing my new design;
FIG. **2** is a front view thereof;
FIG. **3** is a rear view thereof;
FIG. **4** is a left side view thereof;
FIG. **5** is a right side view thereof;
FIG. **6** is a top view thereof; and,
FIG. **7** is a bottom view thereof.
The broken lines immediately adjacent to the shaded area define the bounds of the claimed design and form no part thereof. The broken lines depicting the remainder of the wall mount for pull up bar show features that form no part of the claimed design.

1 Claim, 5 Drawing Sheets

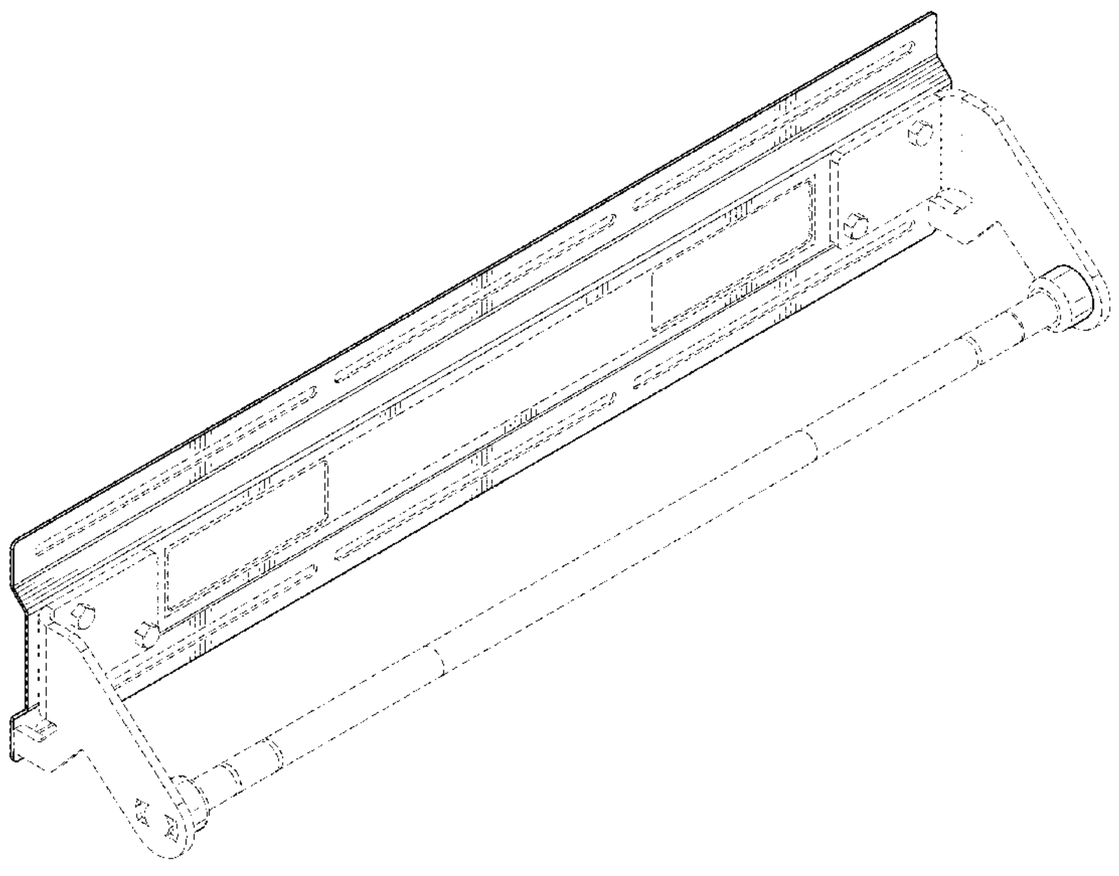

(56) **References Cited**

U.S. PATENT DOCUMENTS

D682,955	S	5/2013	Stephan	
D703,773	S	4/2014	Henry	
D734,410	S	7/2015	Childs et al.	
9,192,799	B2	11/2015	Alenaddaf	
9,308,410	B2	4/2016	Beaver et al.	
9,333,387	B2	5/2016	Hopperstad et al.	
D764,607	S	8/2016	Beckford et al.	
9,409,048	B1	8/2016	Hopperstad et al.	
9,498,670	B1	11/2016	Hopperstad et al.	
9,517,382	B2	12/2016	Payne	
9,649,525	B2	5/2017	Hopperstad et al.	
9,675,829	B1	6/2017	Katz	
9,700,761	B2	7/2017	Beaver et al.	
9,844,691	B2	12/2017	Hopperstad et al.	
D816,173	S	4/2018	Jackson	
9,993,678	B2	6/2018	Hopperstad et al.	
D849,160	S *	5/2019	Lau	D21/686
D854,635	S	7/2019	Dunahay	
D879,216	S	3/2020	Dunahay	
D879,217	S	3/2020	Dunahay	
D883,405	S	5/2020	Dunahay	
D886,920	S	6/2020	Dunahay	
D888,851	S	6/2020	Dunahay	
D929,512	S	8/2021	Dunahay	
D931,954	S	9/2021	Dunahay	
D931,955	S	9/2021	Dunahay	
11,123,595	B2	9/2021	Henniger et al.	
D942,561	S	2/2022	Dunahay	
D945,540	S *	3/2022	Pritchett	D21/686
D949,258	S	4/2022	Dunahay	
D949,264	S	4/2022	Dunahay	
D949,265	S	4/2022	Dunahay	
D952,069	S	5/2022	Adams et al.	
D955,509	S	6/2022	Henniger et al.	
D955,510	S	6/2022	Pritchett et al.	
D963,082	S	9/2022	Dunahay	
D963,083	S	9/2022	Dunahay	
11,660,491	B2	5/2023	Henniger et al.	
11,660,492	B2	5/2023	Henniger et al.	
D992,063	S	7/2023	Dunahay	
D997,267	S	8/2023	Dunahay et al.	
D1,007,619	S	12/2023	Dunahay et al.	
D1,008,381	S	12/2023	Dunahay	
D1,008,382	S	12/2023	Dunahay	
D1,037,839	S *	8/2024	Dunahay	D8/371
D1,040,267	S *	8/2024	Dunahay	D21/694
D1,047,027	S *	10/2024	Dunahay	D21/686
2002/0082145	A1	6/2002	Hamilton	
2003/0222041	A1	12/2003	Hong et al.	
2005/0130806	A1	6/2005	Lopez	
2006/0065800	A1	3/2006	Bremmon	
2006/0145038	A1	7/2006	Chen	
2009/0105052	A1	4/2009	Dalebout et al.	
2009/0124471	A1	5/2009	Storch	
2010/0044536	A1	2/2010	Huang	
2010/0048368	A1	2/2010	Donofrio	
2010/0171017	A1	7/2010	Chang	
2012/0094812	A1	4/2012	Smiley	
2013/0237394	A1	9/2013	Fowler	
2014/0166834	A1	6/2014	Kuroyanagi et al.	
2015/0133271	A1 *	5/2015	Jones	A61H 15/00 482/51
2015/0264823	A1	9/2015	Shirley et al.	
2015/0290488	A1	10/2015	Hopperstad et al.	
2016/0250515	A1	9/2016	Hopperstad et al.	
2016/0338512	A1	11/2016	Royak	
2016/0339291	A1	11/2016	Hopperstad et al.	
2017/0065844	A1	3/2017	Hopperstad et al.	
2017/0072260	A1	3/2017	Jackson	
2017/0189736	A1	7/2017	Martin	
2017/0209733	A1	7/2017	Beaver et al.	
2017/0239512	A1	8/2017	Brasch et al.	
2017/0246490	A1	8/2017	Hopperstad et al.	
2018/0056116	A1	3/2018	Le Nguyen	
2018/0104522	A1	4/2018	Hopperstad et al.	
2018/0142832	A1	5/2018	Inouye	
2018/0153305	A1	6/2018	Haines	
2018/0154234	A1	6/2018	Pack et al.	
2018/0178051	A1	6/2018	Shaw, Jr.	
2018/0326250	A1	11/2018	Henniger et al.	
2019/0126088	A1	5/2019	Henniger et al.	
2019/0269992	A1 *	9/2019	Dunahay	A47B 81/00
2021/0070368	A1	3/2021	Toda et al.	
2022/0016466	A1	1/2022	Henniger et al.	
2022/0023704	A1	1/2022	Henniger et al.	
2023/0173323	A1 *	6/2023	Pritchett	A63B 21/062 482/94

OTHER PUBLICATIONS

Product listing for Rogue RML-3W Fold Back Wall Mount Rack, from <https://web.archive.org/web/20180724134619/https://www.roguefitness.com/rogue-rml-3w-fold-back-wall-mount-rack>, dated Jul. 24, 2018.

Product listing for Rogue R-3W Fold Back Wall Mount Rack, from <https://web.archive.org/web/20181022030706/https://www.roguefitness.com/rogue-r-3w-fold-back-wall-mount-rack>, dated Oct. 22, 2018.

Product listing for Rogue RML-3WC Fold Back Wall Mount Rack, from <https://web.archive.org/web/20171102102928/http://www.roguefitness.com/rogue-rml-3wc-fold-back-wall-mount-rack-custom-color-edition>, dated Nov. 2, 2017.

Pull up bar by Rogue dated Jun. 4, 2018. Found online [Feb. 4, 2019] https://www.roguefitness.com/rogue-jammer-pull-up-bar?bvstate=pg:4/ct:r.

Jun. 8, 2021—(CN) Office Action—App 201880085010.6.

Jul. 30, 2021—(EP) Extended European Search Report—App 18872756.4.

Rogue Fitness: "Installing the RML—3W with the new Rogue Stringer", Sep. 19, 2017 (Sep. 19, 2017), XP054982060, Retrieved from the Internet: URL: https://www.youtube/com/watch?v=TRpmZ68p5Hw [retrieved on Jul. 13, 2021].

Dec. 14, 2021—(CN) 4th Office Action—App 201880085010.6.

Jan. 18, 2022—(CA) 2nd Office Action—App 3,081,723.

Rogue product advertisement dated Dec. 3, 2015 (redacted).

Rogue fitness product video screenshots from <https://www.youtube.com/watch?v=TRpmZ68p5Hw>, dated Sep. 19, 2017.

Gorila Fitness product advertisement dated Apr. 16, 2018 (redacted).

Bulldog Gear product advertisement dated Jan. 11, 2018.

Pure Strength product listing dated Sep. 6, 2018 from <https://www.pure-strength.com/collections/slim-gym-utility-plate>.

Titan Fitness product listing dated Sep. 6, 2018 from <https://www.titan.fitness/t-3-folding-power-rack-stringers.html>.

Titan Fitness product listing dated Sep. 6, 2018 from <https://www.titan.fitness/41-inch-deep-folding-wall-mount-rack.html> (product known to be available as of Mar. 2, 2016).

Product listing for Rogue V2 Face Mount Pull-up Bar for Monster Lite from https://web.archive.org/web/20161105161238/https://www.roguefitness.com/rogue-v2-face-mount-pull-up-bar-for-monster-lite, dated Nov. 5, 2016.

Jan. 11, 2019—(WO) ISR and WO—App No. PCT/US2018/059018.

Rogue P-3 Pull-Up System; https://web.archive.org/web/20160901091143/http:/www.roguefitness.com/p3-pullup-system; 5 pages downloaded Dec. 7, 2020.

ROGUE P-5V Garage Pull-Up System; https://web.archive.org/web/20160812065929/http:/www.roguefitness.com:80/rogue-p-5v-garage-pullup-system; 13 pages downloaded Dec. 7, 2020.

https://gearmashers.com/rogue-fitness-jammer-pull-up-bar-review/ (Year: 2020).

Screenshot of Level Mount tv mount from https://www.youtube.com/watch?v=YUVvZr3qTrc, dated Mar. 26, 2012, accessed Jun. 2, 2020.

Screenshot of Abt Electronics wall mount from https://www.youtube.com/watch?v=XJEmJhEleHO, dated Jun. 6, 2013, accessed Jun. 2, 2020.

(56) **References Cited**

OTHER PUBLICATIONS

Screenshot of Show Me CABLES ultra slim tv wall mount from https://www.youtube.com/watch?v=UfcsWN7brCg, dated Jun. 27, 2016, accessed Jun. 2, 2020.
Screenshot of Texonic Model LX67 wall mount from https://www.youtube.com/watch?v=ojTXO9edjEc, dated Jul. 5, 2017, accessed Jun. 2, 2020.
Screenshot of Sony SUWL450 wall mount from https://www.amazon.co.uk/Sony-SUWL450-Wall-Mount/dp/B00IZEIZB4/ref=sr_1_20?keywords=Sony+Wall+Mount+Bracket&qid=1580915273&sr%E2%80%A6, dated Mar. 14, 2014.
Screenshot of Sony Duronic TV Bracket TV123M wall mount from https://www.amazon.co.uk/dp/B001PHBZFQ/ref=psdc_1338216031_t4_B07MX3Q3NZ, dated Jan. 12, 2009.
Screenshot of wall mounting bracket Dv5 from Hornung's Industrial Gas Catalogue, http://my.page2flip.de/1672972/2178732/2178865/pdf/CatalogueforindustrialgascontrolequipmentHornungGmbH.pdf, dated Jan. 2013.
Screenshot of wall mounting bracket D2 from Hornung's Industrial Gas Catalogue, http://my.page2flip.de/1672972/2178732/2178865/pdf/CatalogueforindustrialgascontrolequipmentHornungGmbH.pdf, dated Jan. 2013, accessed Feb. 6, 2020.
Screenshot of wall mounting bracket painted from Hornung's Industrial Gas Catalogue, http://my.page2flip.de/1672972/2178732/2178865/pdf/CatalogueforindustrialgascontrolequipmentHornungGmbH.pdf, dated Jan. 2013, accessed Feb. 6, 2020.
Screenshot of Altecnic Expansion Vessel Bracket from https://www.amazon.co.uk/dp/B00QVM4LCE/ ref=sspa_dk_detail_0?psc=1&pd_rd_i=B00QVM4LCE&pd_rd_w=6dXas&pf_rd_p=1055d8b2-c10c-4%E2%80%A6, dated Dec. 11, 2014, accessed Feb. 5, 2020.
Screenshot of Reflex Winkelmann Wall Holder from https://www.amazon.co.uk/Reflex-Winkelmann-7611000-Holder-25-Litre/dp/B0017UWL6I, dated Dec. 13, 2012, accessed Feb. 5, 2020.
Design View copy of Registered Community Design No. 002104463-0001, dated Sep. 17, 2012.
Design View copy of Registered Community Design No. 00765862-0001, dated Jul. 27, 2007.
Design View copy of Registered Community Design No. 000153796-0002, dated Feb. 25, 2004.
Screenshot of Mammoth Lite Folding Rack from BULLDOG Gear Instagram account, dated Jan. 11, 2018.
Screenshot of Folding Rack from Bulldog Gear Instagram account, dated Oct. 2, 2018.
Screenshot of wall bracket from Weinmann-Schanz, http://web.archive.org/web/20170909025230/http://www.weinmann-schanz.de/de/de/Heizung/Neu-im-Sortiment/W%C3%A4rmeerzeuger-Speicher/pid.1143.1160/agid.90421.90432.105367/ecm.ag/Abstandsmontageplatten-f%C3%BCr-Wandkonsolen.html, dated Sep. 9, 2017.
Screenshot of wall bracket from Weinmann-Schanz, https://www.weinmann-schanz.de/de/de/Heizung/W%C3%A4rmeerzeuger-Speicher/Abgassysteme/Edelstahl-Abgassystem-Uni-DW-doppelwandig/Abstandsmontageplatten-f%C3%BCr-Wandkonsolen-sid134351.htm, accessed Feb. 6, 2020.
Screenshot of wall bracket from Weinmann-Schanz, http://web.archive.org/web/20170529161506/http://www.weinmann-schanz.de:80/de/de/Heizung/Neu-im-Sortiment/W%C3%A4rmeerzeuger Speicher/pid. 1143.1160/agid. 90421.90432.105379/ecm.ag/Abstandsmontageplatten-f%C3%BCr-Wandhalter.html, dated May 29, 2017.
Screenshot of wall bracket from Weinmann-Schanz, https://www.weinmann-schanz.de/de/de/Heizung/W%C3%A4rmeerzeuger-Speicher/Abgassysteme/Edelstahl-Abgassystem-Uni-DW-doppelwandig/Abstandsmontageplatten-f% C3%BCr-Wandhalter-sid182096.html, accessed Feb. 11, 2020.
Coulter Ventures LLC v *Bulldog Gear Limited*, UK High Court (Eng. & Wales), Claim No. HP-2019-000054, Defence and Counterclaim, dated Feb. 13, 2020.
Coulter Ventures LLC v *Bulldog Gear Limited*, High Court (Eng. & Wales), Claim No. HP-2019-000054, Defendant's Initial Disclosure List of Documents, dated Feb. 12, 2020.
Coulter Ventures LLC v *Bulldog Gear Limited*, High Court (Eng. & Wales), Claim No. HP-2019-000054, Amended Defence and Counterclaim, dated Apr. 23, 2020.
Coulter Ventures LLC v *Bulldog Gear Limited*, High Court (Eng. & Wales), Claim No. HP-2019-000054, Amended Defendant's Initial Disclosure List of Documents, dated Apr. 23, 2020.
Coulter Ventures LLC v *Bulldog Gear Limited*, High Court (Eng. & Wales), Claim No. HP-2019-000054, Re-Amended Defence and Counterclaim, dated Feb. 4, 2021.
Coulter Ventures LLC v *Bulldog Gear Limited*, High Court (Eng. & Wales), Claim No. HP-2019-000054, Claim Form and Particulars of Claim, dated Dec. 18, 2019.
Coulter Ventures LLC v *Bulldog Gear Limited*, High Court (Eng. & Wales), Claim No. HP-2019-000054, Claimant's Initial Disclosure List of Documents, dated Dec. 18, 2019.
Coulter Ventures LLC v *Bulldog Gear Limited*, High Court (Eng. & Wales), Claim No. HP-2019-000054, Reply and Defence to Counterclaim, dated Apr. 2, 2020.
Coulter Ventures LLC v *Bulldog Gear Limited*, High Court (Eng. & Wales), Claim No. HP-2019-000054, Amended Claim Form and Amended Particulars of Claim, dated Dec. 23, 2020.
Coulter Ventures LLC v *Bulldog Gear Limited*, High Court (Eng. & Wales), Claim No. HP-2019-000054, Amended Reply and Defence to Counterclaim, dated Feb. 18, 2021.

* cited by examiner

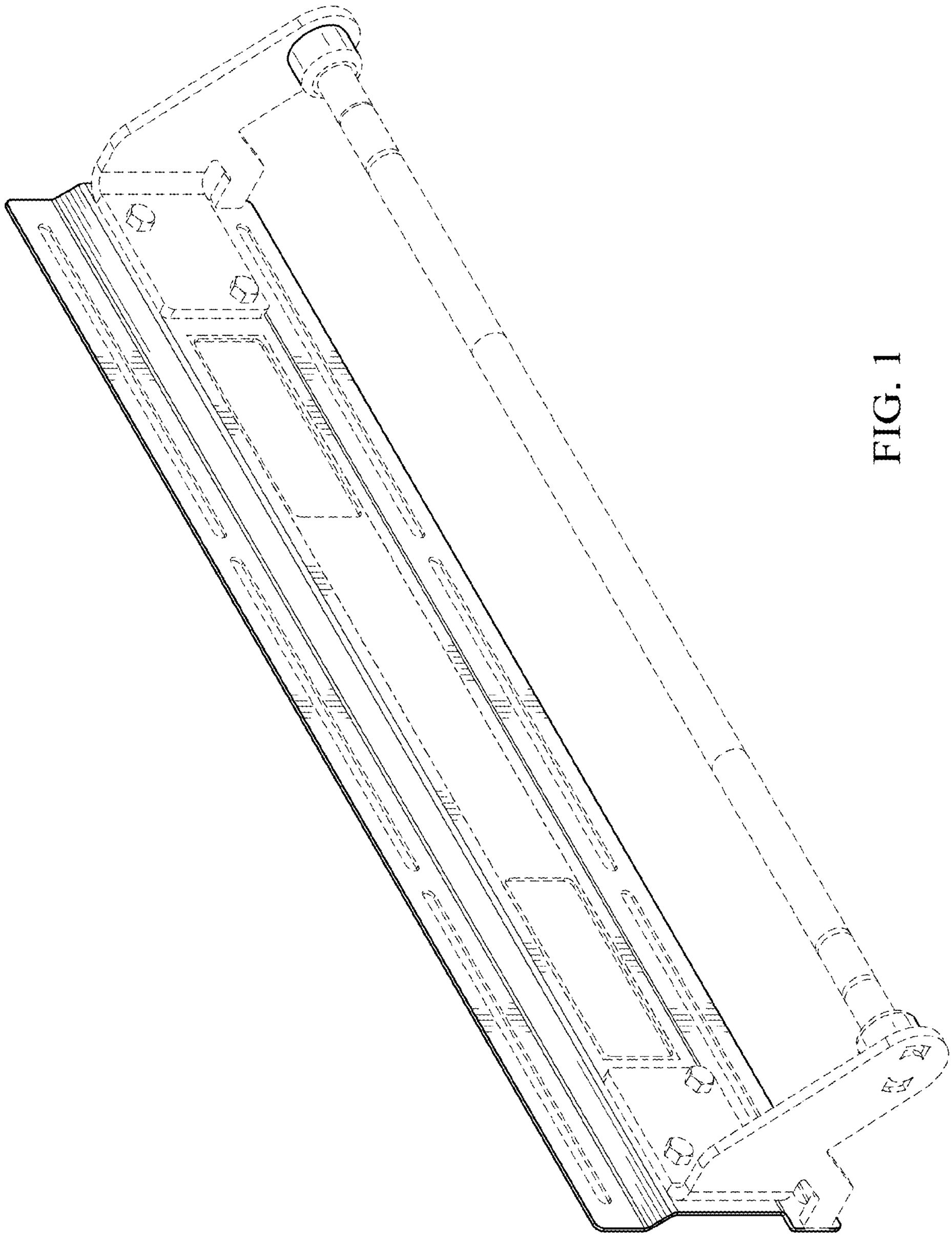

FIG. 1

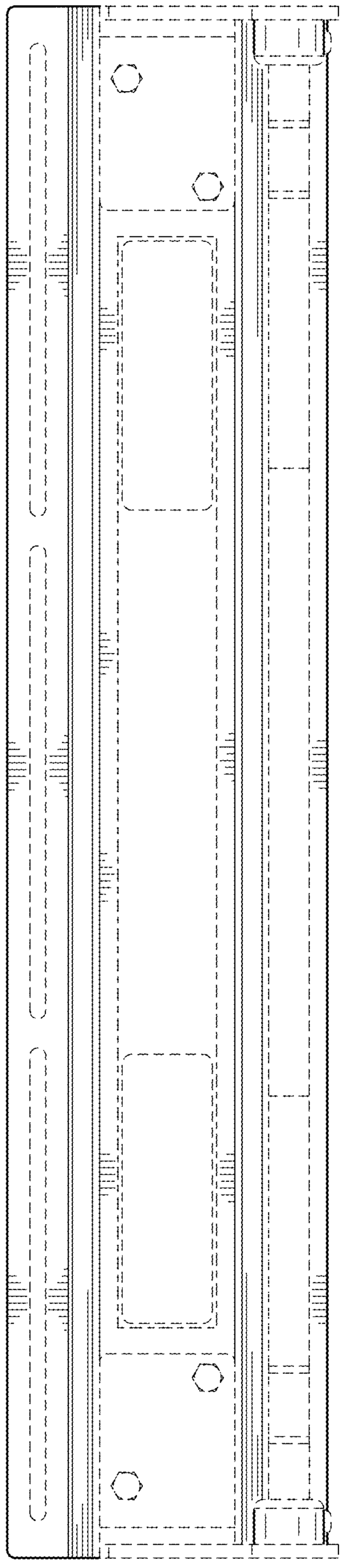

FIG. 2

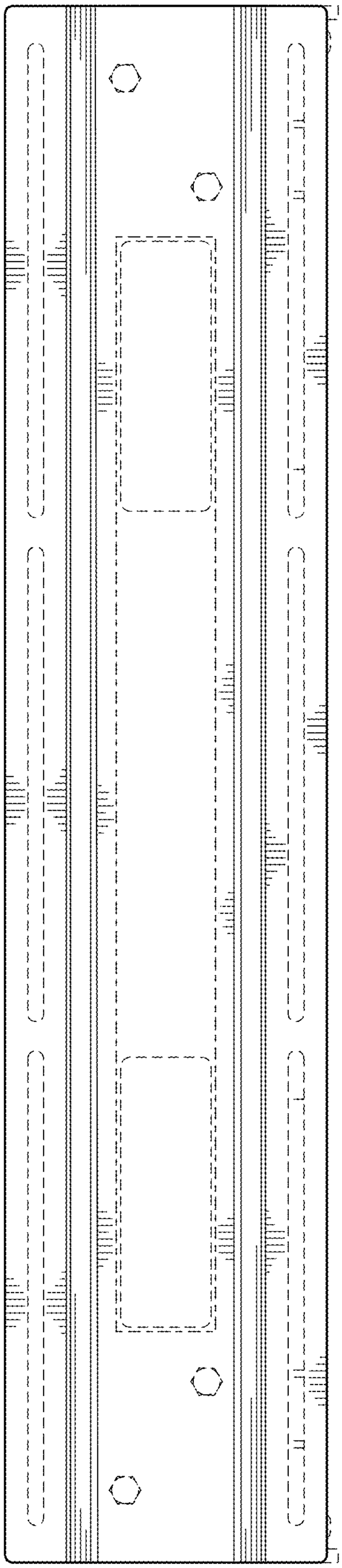

FIG. 3



FIG. 5

FIG. 4

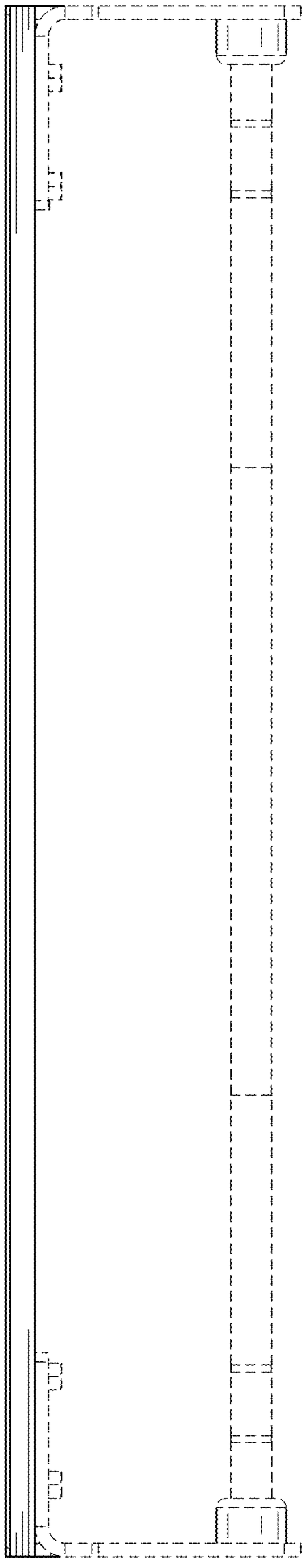

FIG. 6

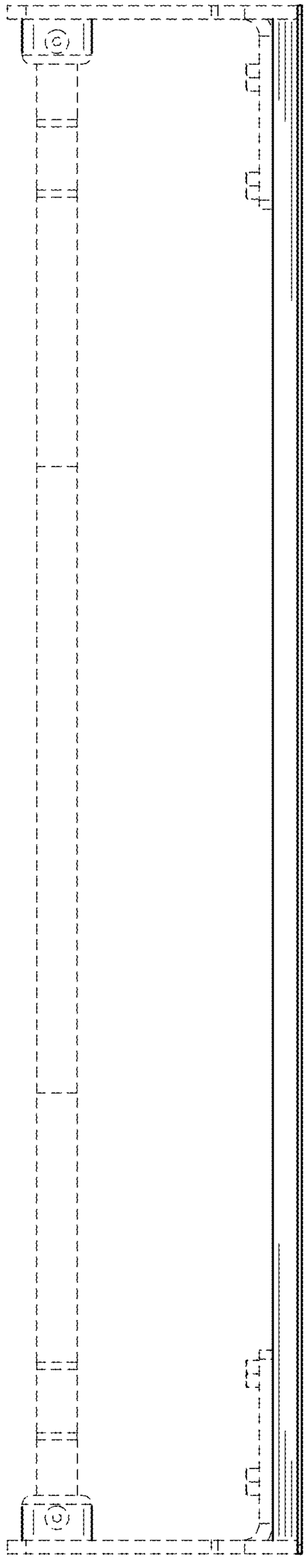

FIG. 7