US0D1103442S

(12) United States Design Patent

Wolff et al.

(10) Patent No.: US D1,103,442 S
(45) Date of Patent: ** Nov. 25, 2025

(54) **VEHICLE TAIL LAMP**

(71) Applicant: **Ford Global Technologies, LLC**, Dearborn, MI (US)

(72) Inventors: **Max Wolff**, Brighton (AU); **Simon Brook**, Middle Park (AU); **Liang Chen**, Shanghai (CN); **Jiaming Chen**, Shanghai (CN)

(73) Assignee: **Ford Global Technologies, LLC**, Dearborn, MI (US)

(**) Term: **15 Years**

(21) Appl. No.: **29/954,085**

(22) Filed: **Jul. 25, 2024**

(30) **Foreign Application Priority Data**

Feb. 7, 2024 (CN) 202430082815.3

(51) **LOC (15) Cl.** **26-06**

(52) **U.S. Cl.**
USPC **D26/28**

(58) **Field of Classification Search**
USPC D26/24, 28, 29, 30, 31, 32, 33, 34, 35, D26/36, 139, 63
CPC F21S 41/00; F21S 41/141; F21S 41/162; F21S 41/18; F21S 41/20; F21S 41/33; F21S 41/36; F21S 41/60; F21S 43/00; F21W 2103/35; F21W 2103/40; F21W 2102/17; F21W 2102/30; F21W 2103/00; F21W 2103/55; F21W 2104/00; F21W 2107/17; F21W 2107/13; F21W 2107/20; F21W 2131/308; F21W 2131/401; B63B 45/02
See application file for complete search history.

(56) **References Cited**

U.S. PATENT DOCUMENTS

D789,575 S * 6/2017 Willett D26/28
D836,223 S * 12/2018 Kim D26/28
D863,625 S * 10/2019 Kim D26/28
D877,377 S * 3/2020 Cheng D26/28
D920,544 S * 5/2021 Kim D26/28
D955,615 S * 6/2022 Lin D26/28
D957,014 S * 7/2022 Jeong D26/28
D957,015 S * 7/2022 Jeong D26/28
D1,028,304 S * 5/2024 Wang D26/28
D1,029,320 S * 5/2024 Wang D26/28
D1,031,099 S * 6/2024 Seo D26/28
D1,040,386 S * 8/2024 Kim D26/28
D1,042,904 S * 9/2024 Kong D26/28
D1,042,916 S * 9/2024 Wang D26/28
D1,057,236 S * 1/2025 Lee D26/28
D1,064,341 S * 2/2025 Wang D26/28
D1,072,296 S * 4/2025 Choo D26/28
D1,072,299 S * 4/2025 Moon D26/28
D1,087,424 S * 8/2025 Choi D26/28

* cited by examiner

Primary Examiner — Angela J Lee
(74) *Attorney, Agent, or Firm* — Vichit Chea

(57) **CLAIM**

The ornamental design for a vehicle tail lamp as shown and described.

DESCRIPTION

FIG. **1** is a front elevational view of a vehicle tail lamp, showing our new design;
FIG. **2** is a left side elevational view thereof;
FIG. **3** is a right side elevational view thereof;
FIG. **4** is a top plan view thereof;
FIG. **5** is a bottom plan view thereof;
FIG. **6** is a top, front and left side perspective view thereof; and,
FIG. **7** is a bottom, front and left side perspective view thereof.
The claimed design is indicated by the relatively dark portions in the figures. The de-emphasized and relatively light portions form no part of the claimed design.

1 Claim, 7 Drawing Sheets

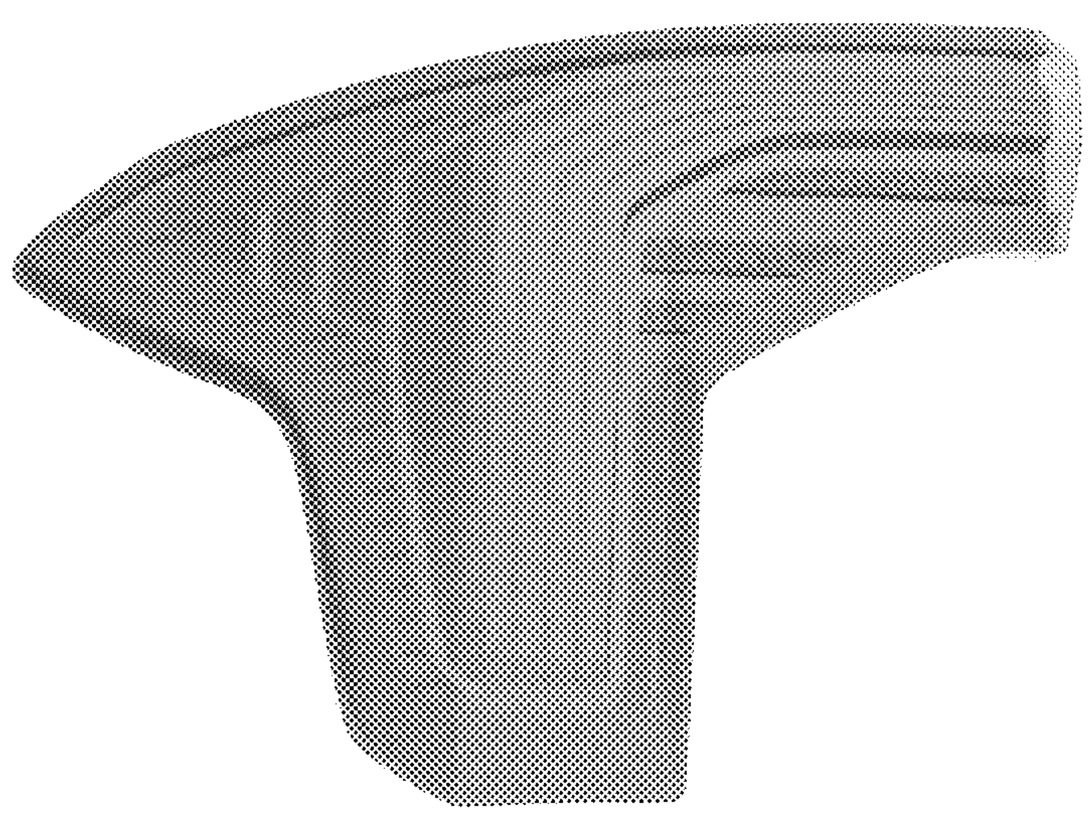

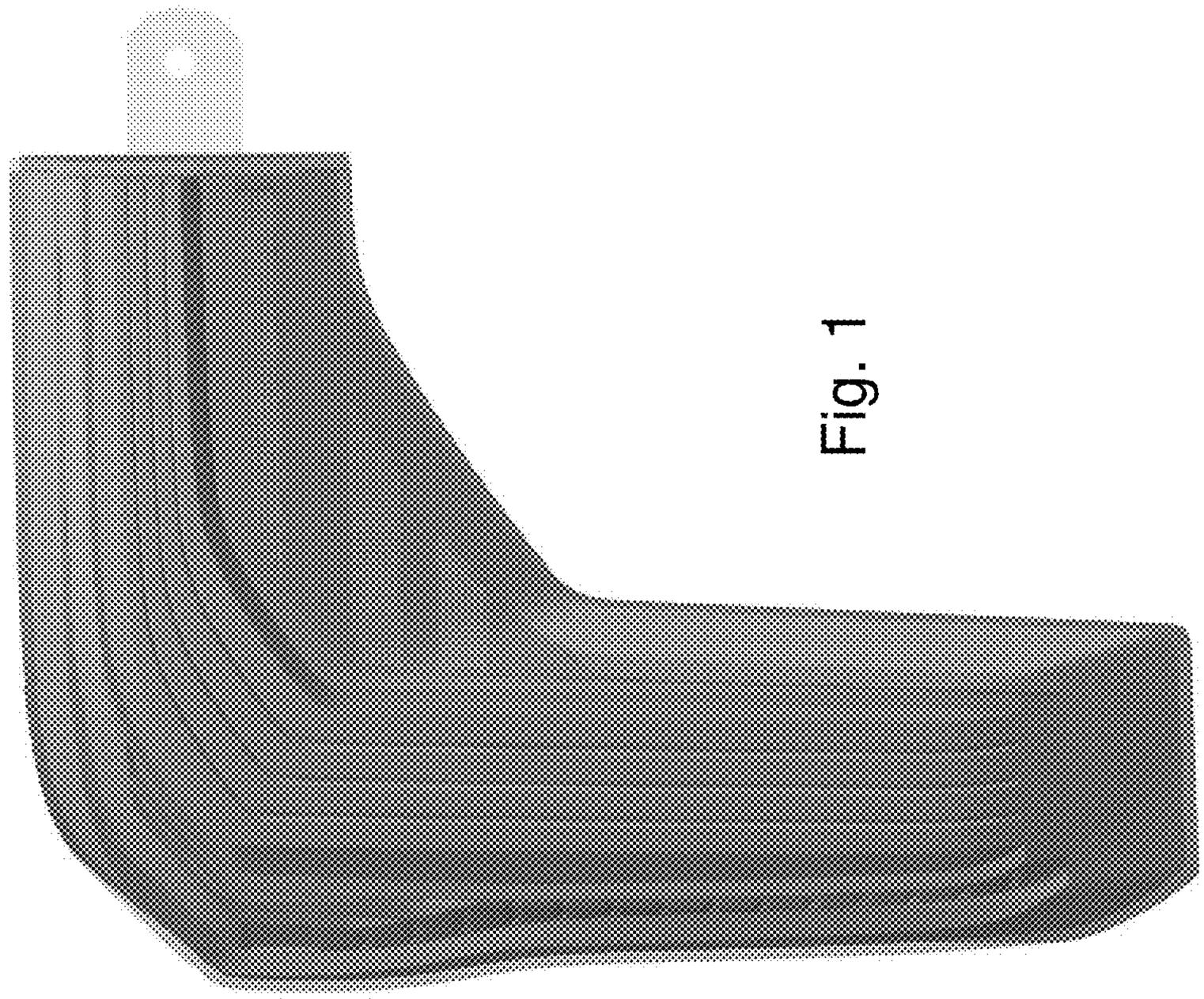

Fig. 1

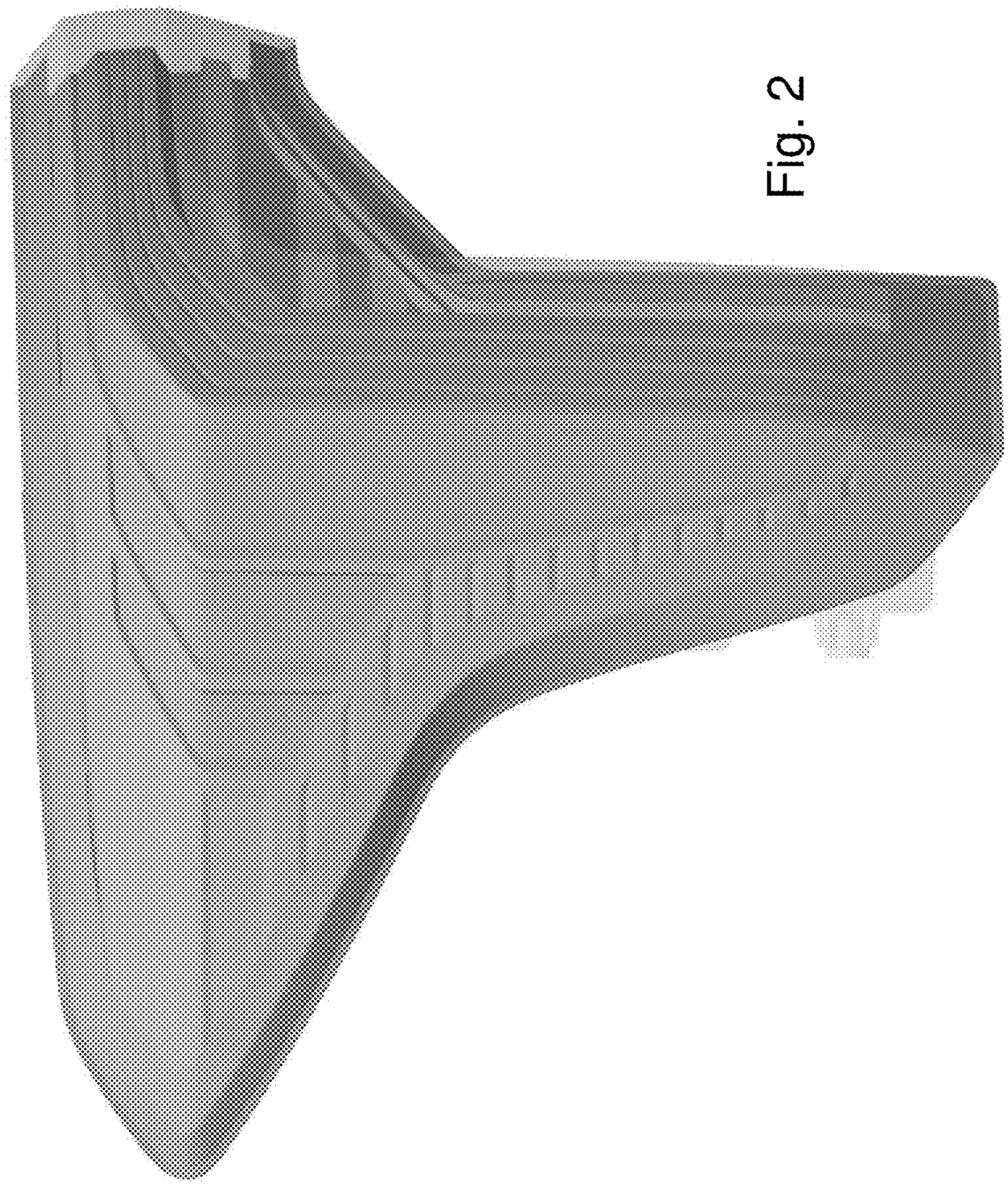

Fig. 2

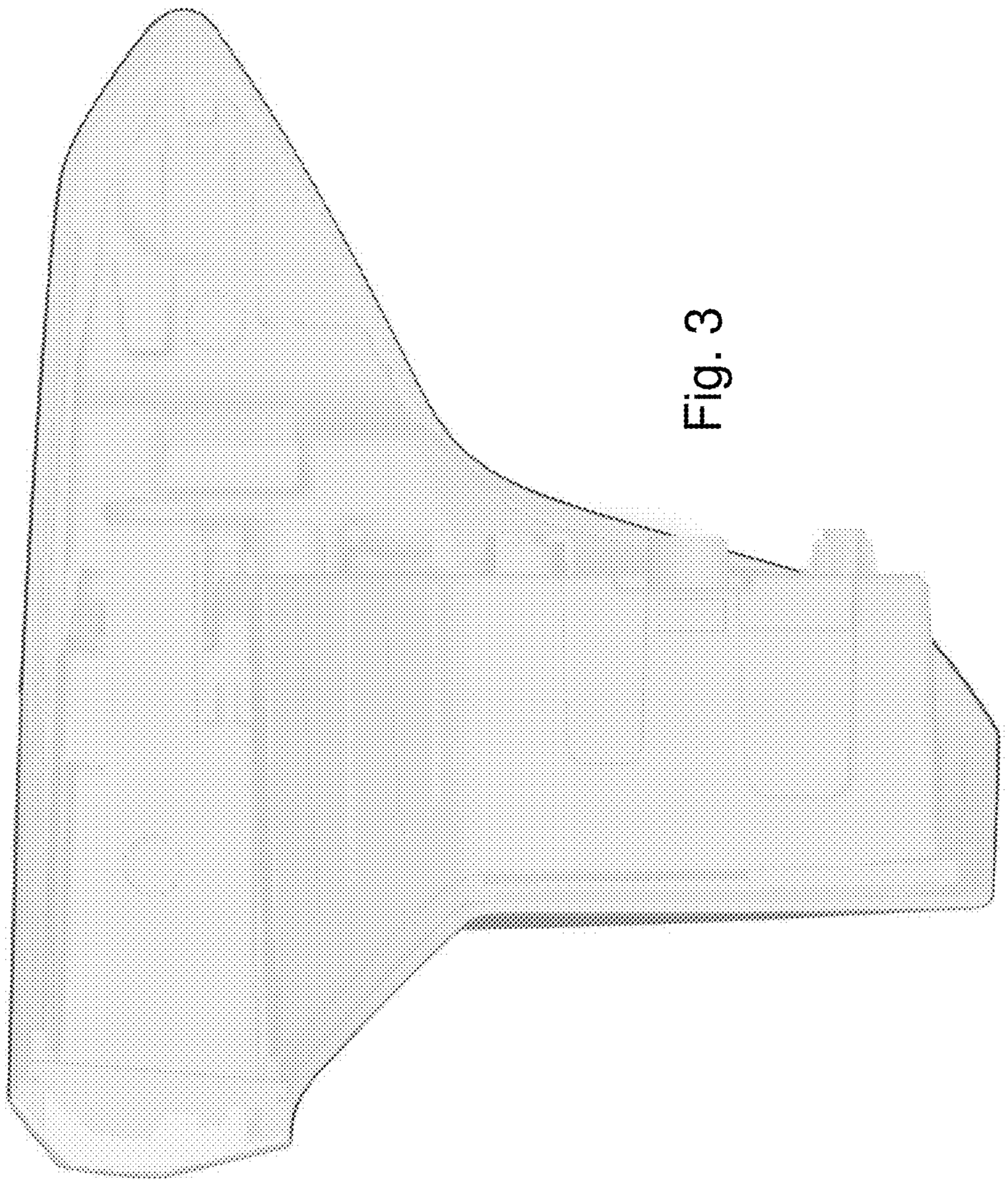

Fig. 3

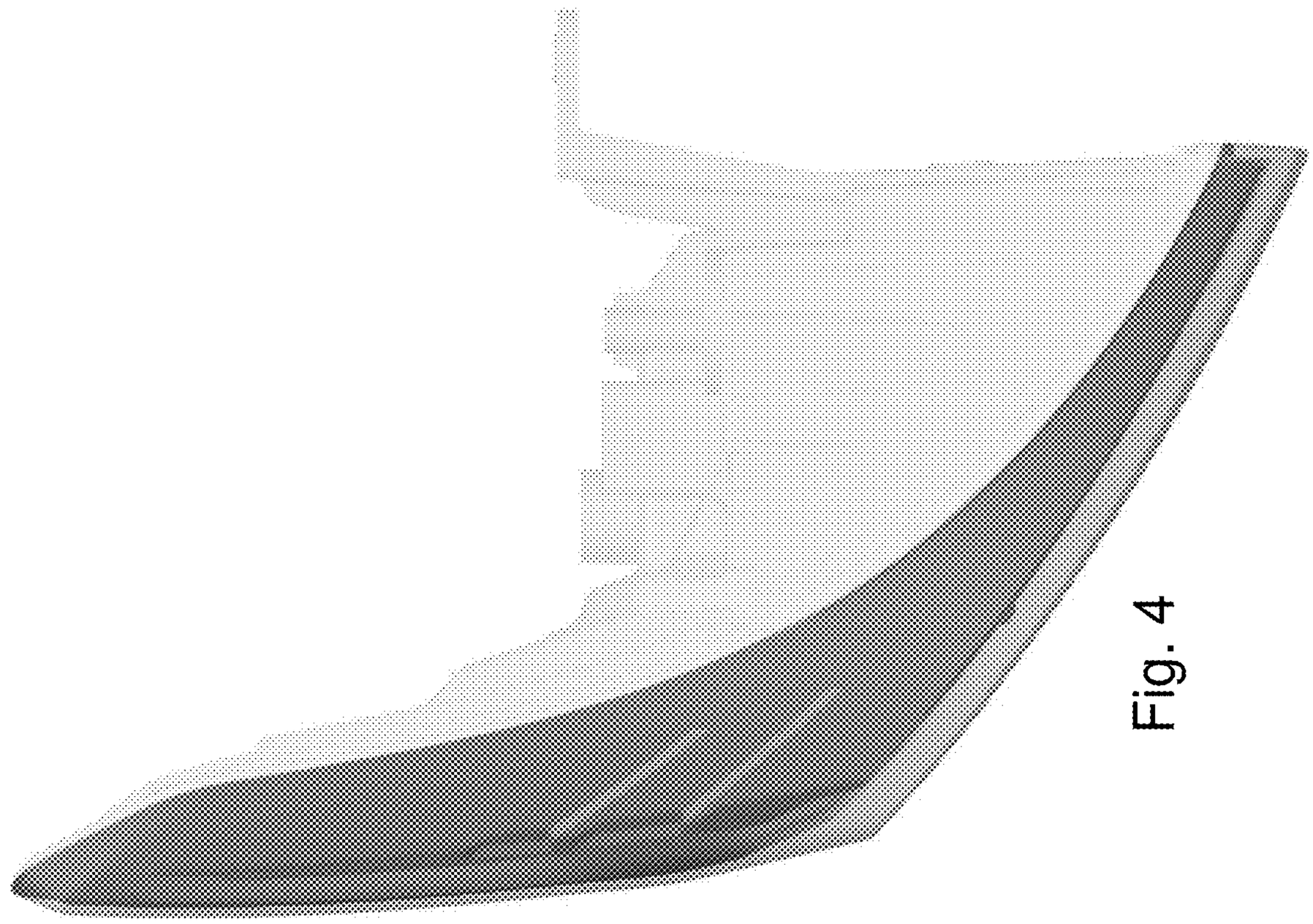

Fig. 4

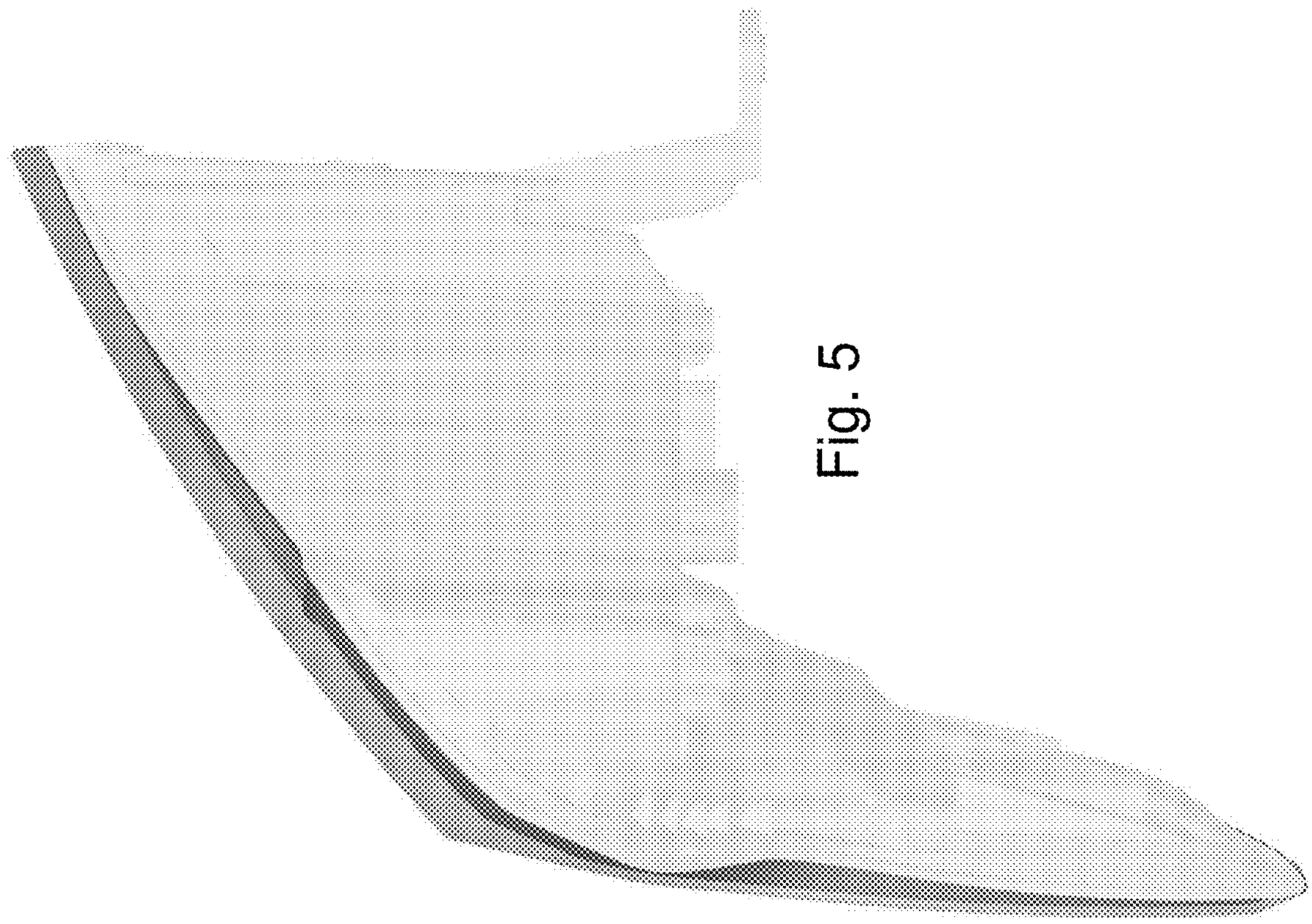

Fig. 5

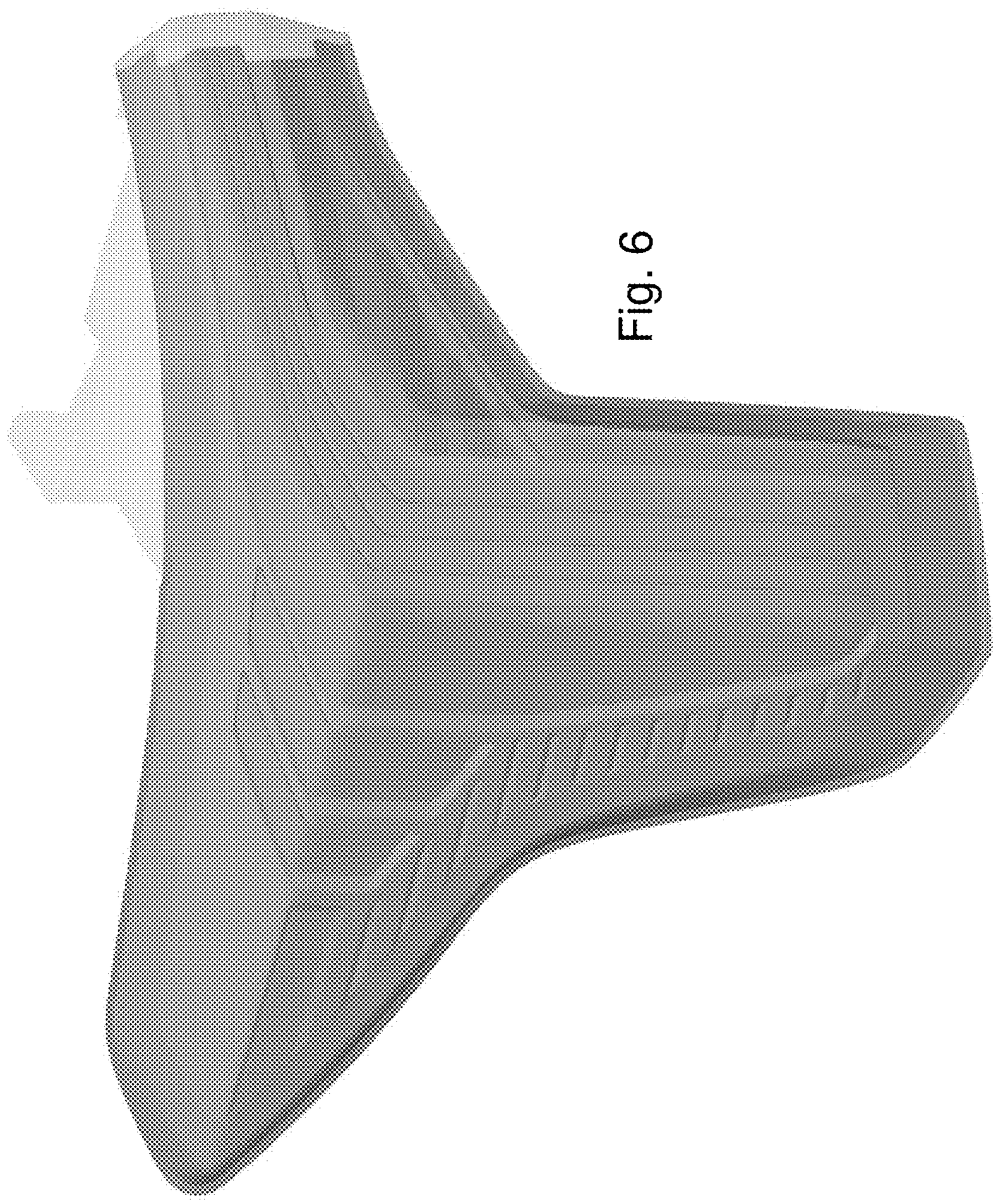

Fig. 6

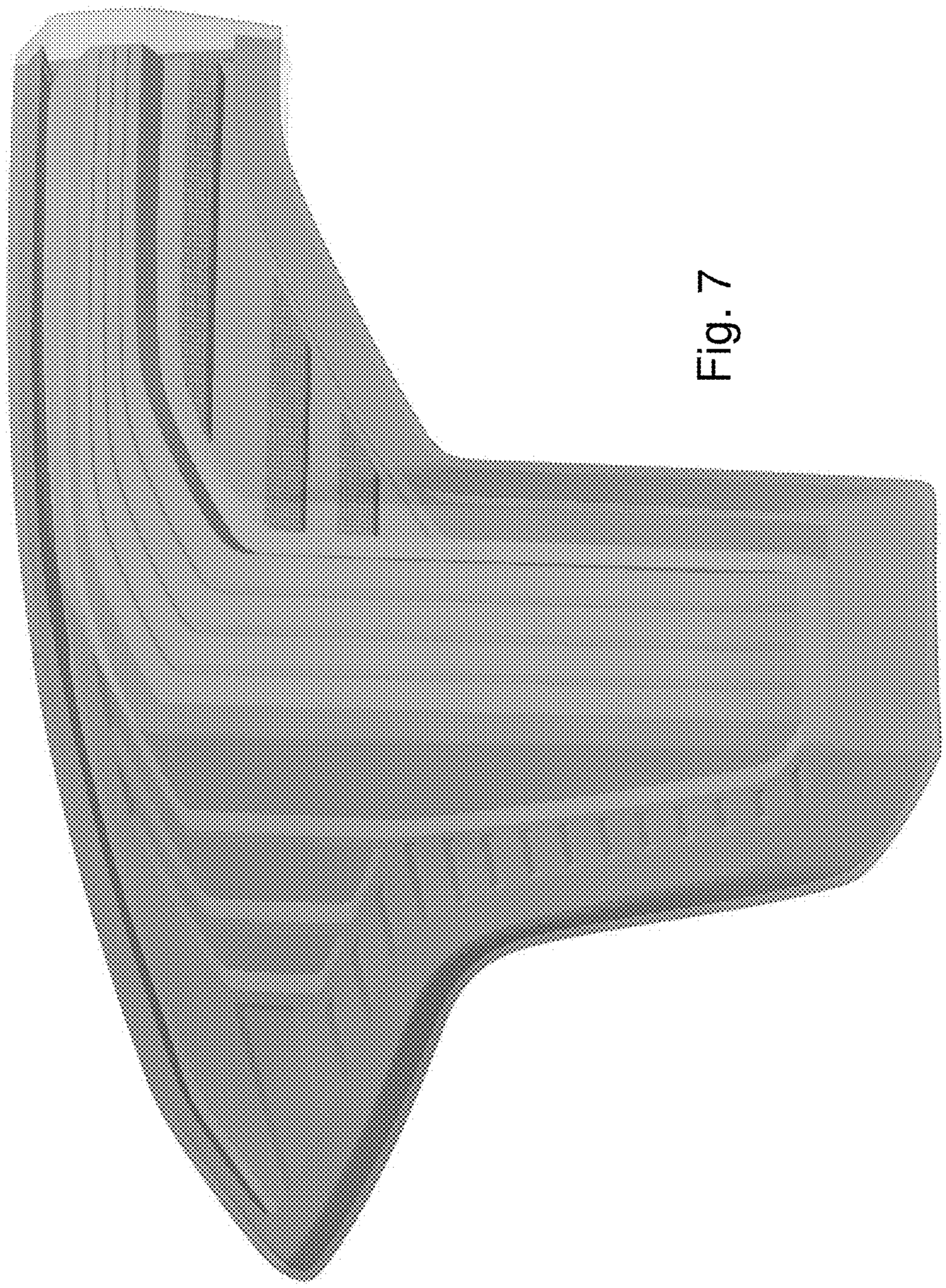

Fig. 7