US0D1099420S

(12) United States Design Patent

Lim et al.

(10) Patent No.: US D1,099,420 S
(45) Date of Patent: ** Oct. 21, 2025

(54) **HAIR DRYER**

(71) Applicant: **LG Electronics Inc.**, Seoul (KR)

(72) Inventors: **Chulhee Lim**, Seoul (KR); **Minji Seo**, Seoul (KR); **Sanghoon Yoon**, Seoul (KR); **Nahyun Kim**, Seoul (KR)

(73) Assignee: **LG ELECTRONICS INC.**, Seoul (KR)

(**) Term: **15 Years**

(21) Appl. No.: **35/521,996**

(22) Filed: **Aug. 14, 2023**

(80) **Hague Agreement Data**

Int. Filing Date: **Aug. 14, 2023**
Int. Reg. No.: **DM/231820**
Int. Reg. Date: **Aug. 14, 2023**
Int. Reg. Pub. Date: **Aug. 16, 2024**

(30) **Foreign Application Priority Data**

Feb. 15, 2023 (KR) 30-2023-0005688

(51) **LOC (15) Cl.** **28-03**
(52) **U.S. Cl.**
USPC **D28/13**
(58) **Field of Classification Search**
USPC D28/12–16; D8/29.1, 29.2
CPC A45D 20/00; A45D 20/04; A45D 20/08; A45D 20/10
See application file for complete search history.

(56) **References Cited**

U.S. PATENT DOCUMENTS

D912,313 S * 3/2021 Shin D28/13
D912,317 S * 3/2021 Park D28/13
D912,894 S * 3/2021 Shin D28/13
D926,370 S * 7/2021 Sun D28/13
D952,248 S * 5/2022 Lei D28/13
D955,042 S * 6/2022 Shin D28/13
D998,886 S * 9/2023 Middendorp D28/13
D1,007,759 S * 12/2023 Li D28/13
D1,013,949 S * 2/2024 Ding D28/13
D1,018,972 S * 3/2024 Jiang D28/13
(Continued)

FOREIGN PATENT DOCUMENTS

CN 306310925 * 2/2021
WO D214391-001 * 7/2022
WO D233480-001 * 12/2023

OTHER PUBLICATIONS

HHT Professional Hair Dryer . . . [online] Retrieved Apr. 8, 2025 from URL: https://www.amazon.com/HHT-Professional-Brushless-High-Speed-Hairdryer/dp/B0BL72ZQM5 (Year: 2025).*
(Continued)

Primary Examiner — Vy N Koenig
(74) *Attorney, Agent, or Firm* — Birch, Stewart, Kolasch & Birch, LLP

(57) **CLAIM**

The ornamental design for a hair dryer as shown and described.

DESCRIPTION

1. Hair Dryer
1.1 : Front perspective view
1.2 : Front view
1.3 : Back view
1.4 : Left view
1.5 : Top view
1.6 : Bottom view
1.7 : Back perspective view
1.8 : Back perspective view **2**
The broken lines depict portions of the hair dryer that form no part of the claimed design; reproduction **1.4** is a left view of the claimed design where the right view is a mirror image.

1 Claim, 8 Drawing Sheets

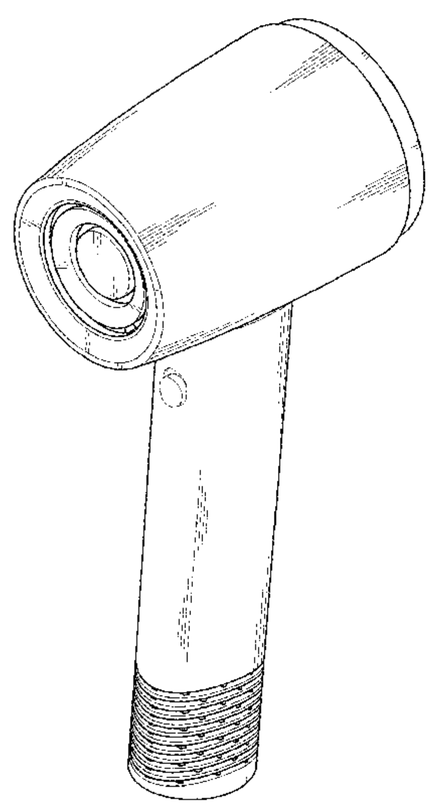

(56) **References Cited**

U.S. PATENT DOCUMENTS

D1,023,450 S * 4/2024 Ding D28/13
D1,055,373 S * 12/2024 Wang D28/13

OTHER PUBLICATIONS

1800W Best Selling Brushless High Speed Hair Dryer 3 Levels Dryer. [online] Retrieved Apr. 8, 2025 from URL: https://www.alibaba.com/product-detail/1800W-Hot-Sale-Negative-Ion-Bldc_1601320500954.html (Year: 2025).*

* cited by examiner

1.1

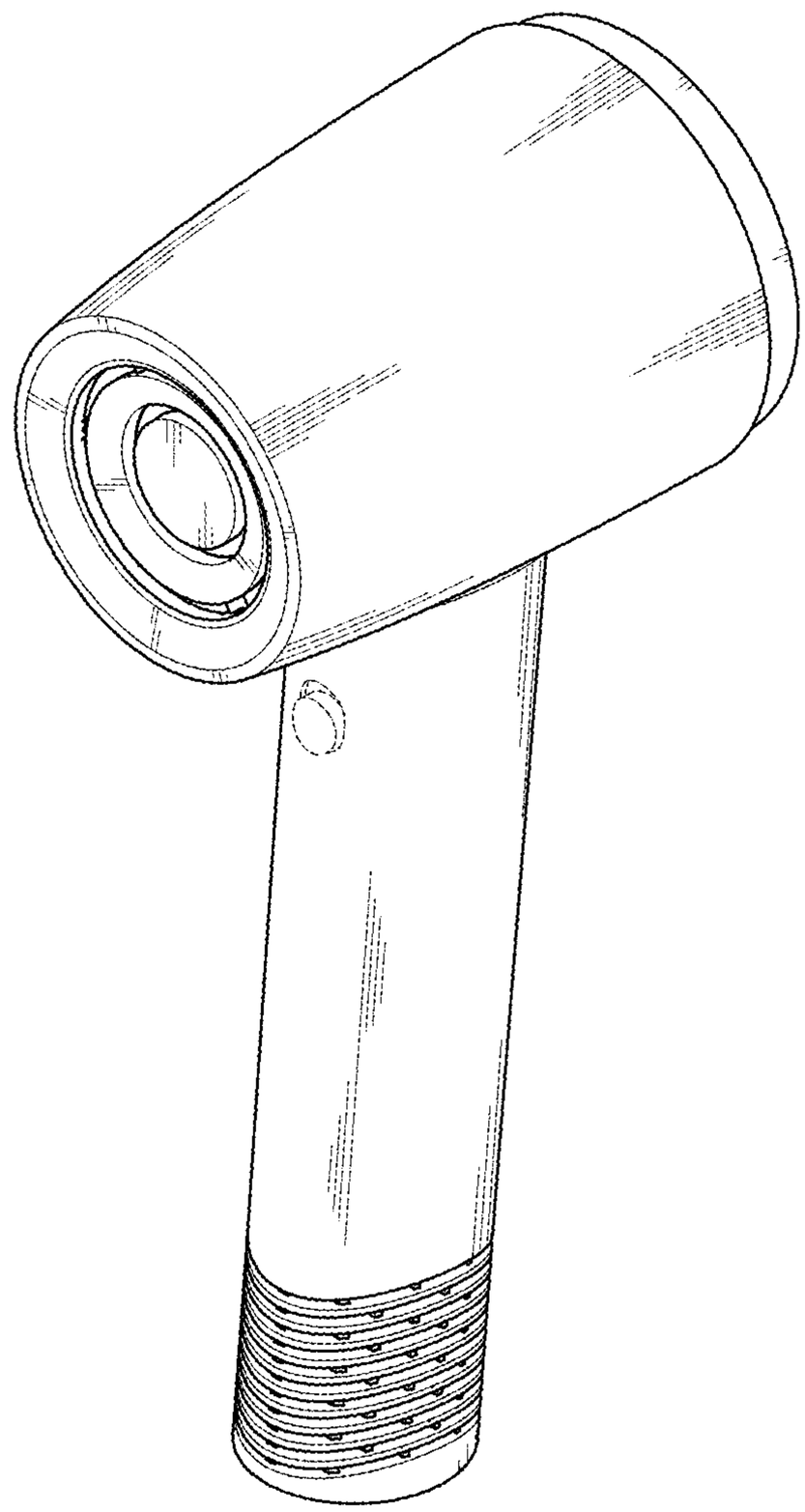

1.2

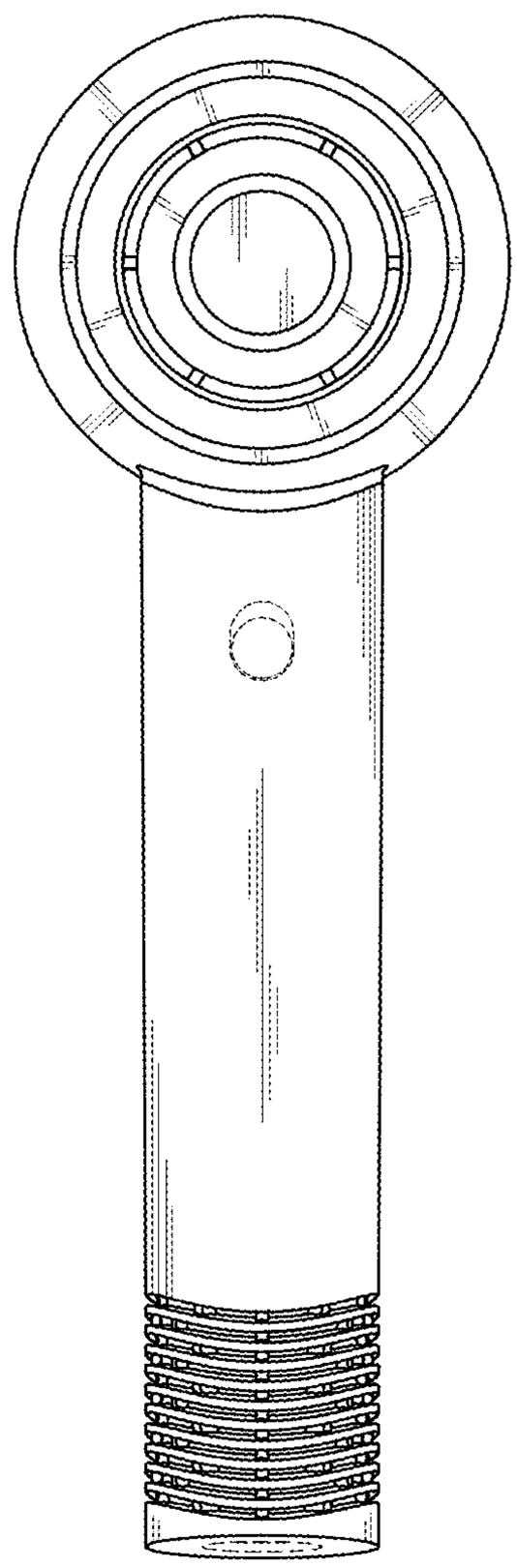

1.3

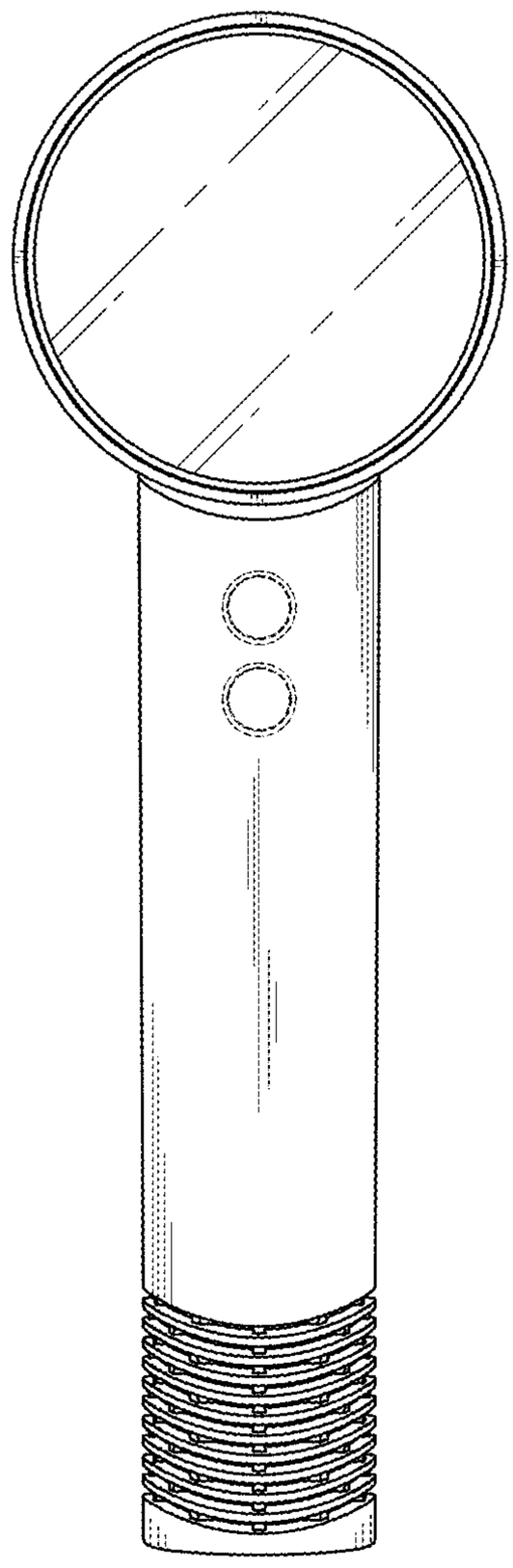

1.4

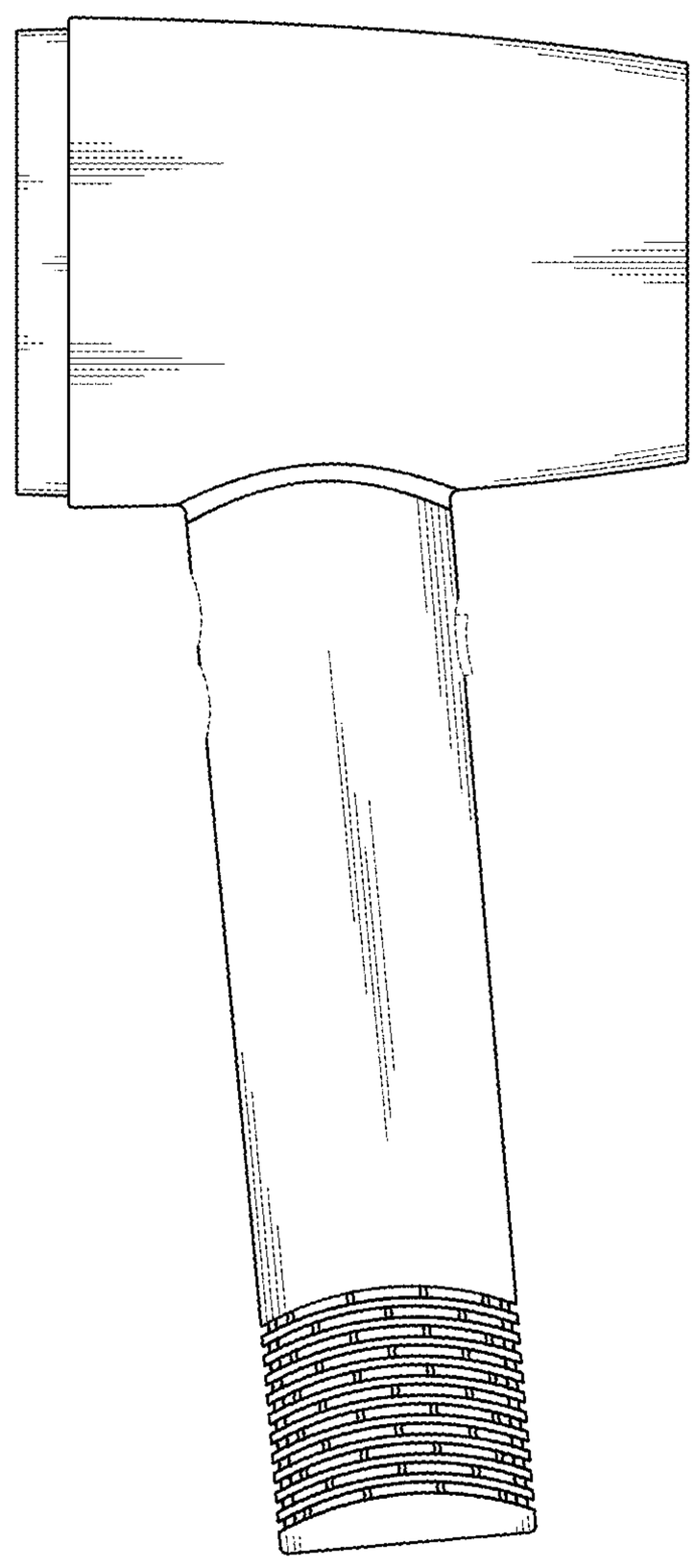

1.5

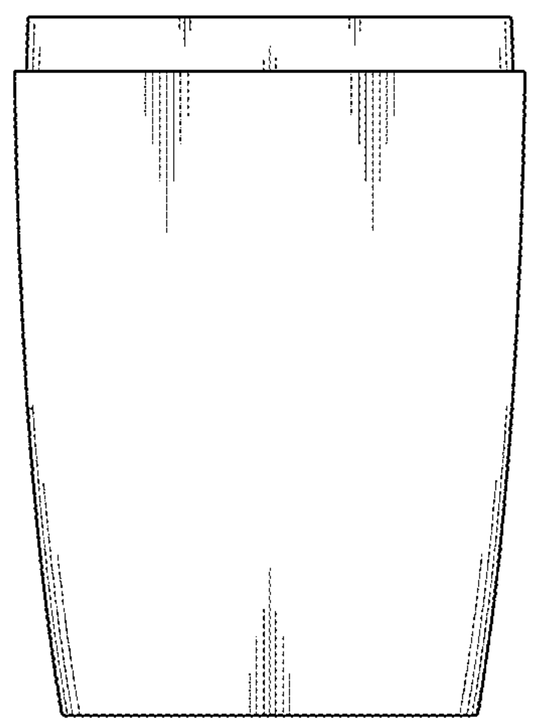

1.6

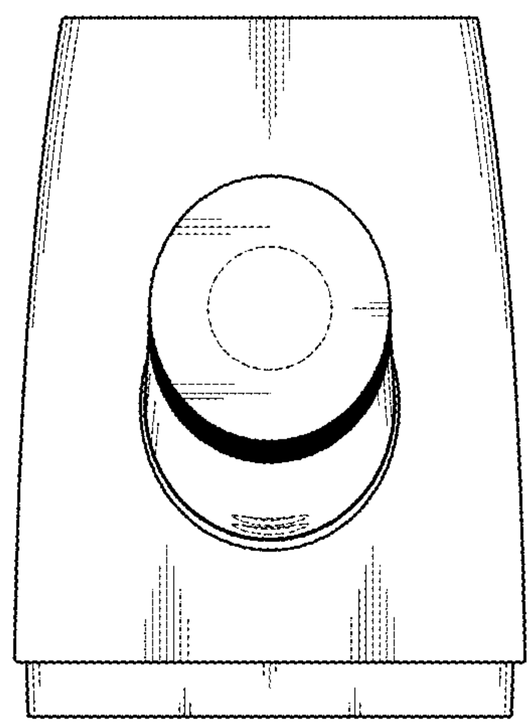

1.7

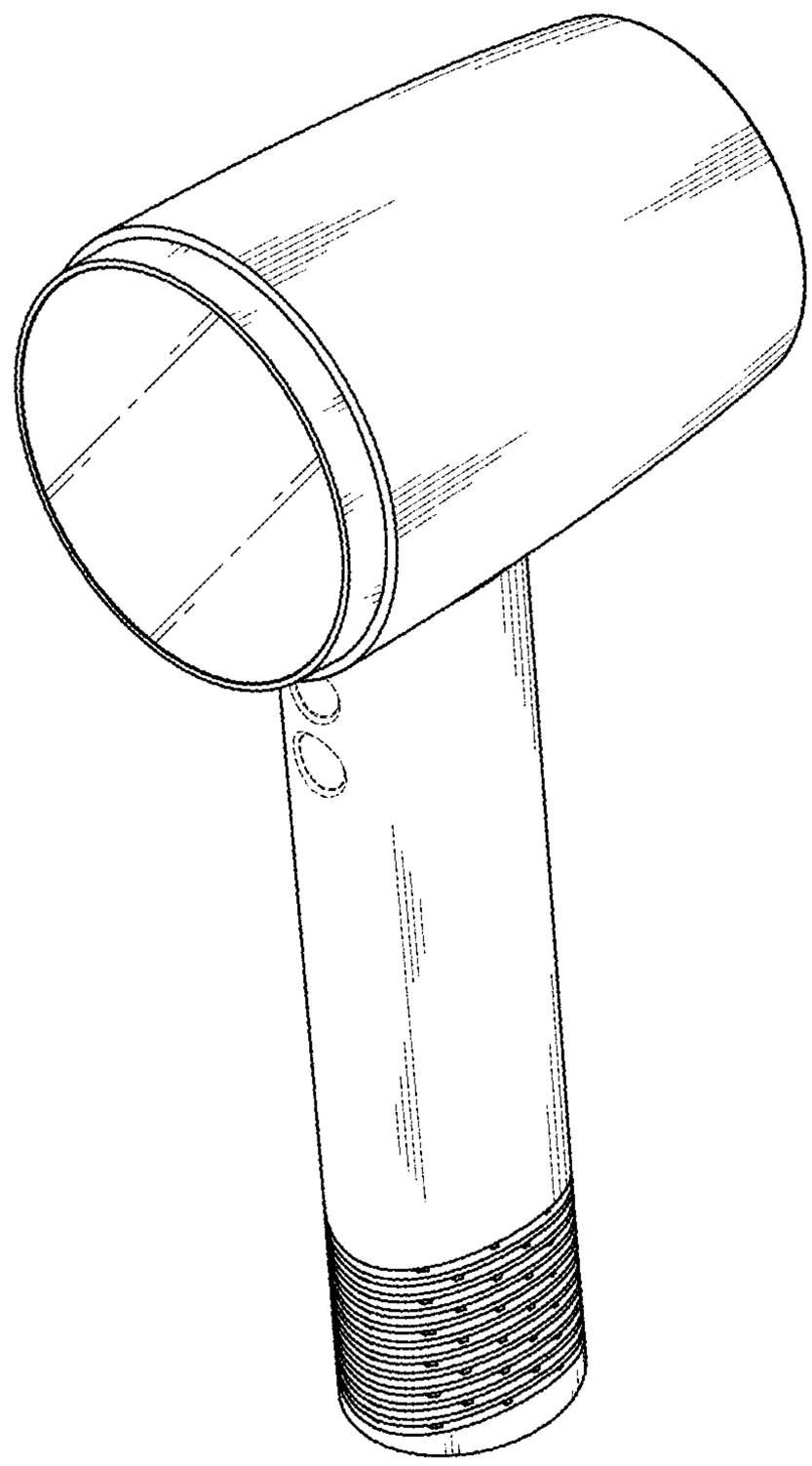
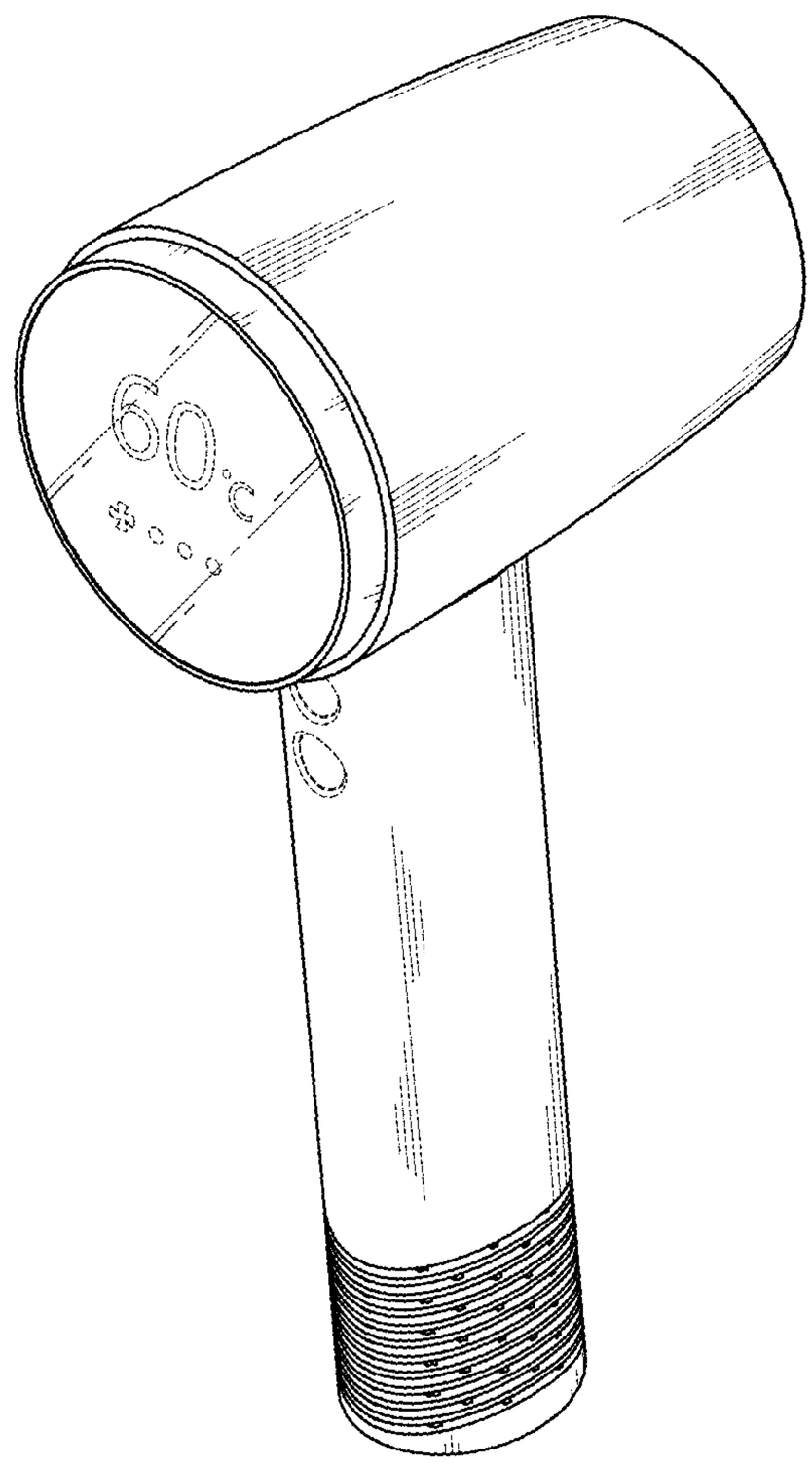
1.8