US0D1094361S

(12) United States Design Patent

Jeong

(10) Patent No.: US D1,094,361 S
(45) Date of Patent: ** Sep. 23, 2025

(54) **CASE FOR ELECTRONIC COMMUNICATIONS DEVICE**

(71) Applicant: **SPIGEN KOREA CO., LTD.**, Seoul (KR)

(72) Inventor: **Chan Yeop Jeong**, Seoul (KR)

(73) Assignee: **SPIGEN KOREA CO., LTD.**, Seoul (KR)

(**) Term: **15 Years**

(21) Appl. No.: **29/902,621**

(22) Filed: **Sep. 14, 2023**

(51) **LOC (15) Cl.** **14-03**

(52) **U.S. Cl.**
USPC **D14/253**

(58) **Field of Classification Search**
USPC D14/217, 250–253, 440, 447
CPC F16M 13/00; F16M 2200/00; B60R 11/02; H04M 1/12; H04M 1/02; H04M 1/04; H04M 1/11; A47B 2023/049; A47B 2097/005; A45F 5/1525; A45C 2011/003; A45C 2011/002; A45C 1/06
See application file for complete search history.

(56) **References Cited**

U.S. PATENT DOCUMENTS

D999,199	S	*	9/2023	Yoon	D14/250
D1,016,052	S	*	2/2024	Liang	D14/250
D1,043,646	S	*	9/2024	Chung	D14/250
D1,053,177	S	*	12/2024	Yoon	D14/250
D1,065,166	S	*	3/2025	Weng	D14/253
D1,068,748	S	*	4/2025	Seo	D14/250
2023/0300228	A1	*	9/2023	Mody	H04M 1/022 455/566

FOREIGN PATENT DOCUMENTS

CN 308408029 * 1/2024

OTHER PUBLICATIONS

Spidercase Designed for Samsung Galaxy Z Fold 6 Case, date available Jun. 4, 2024, retrieved May 30, 2025, retrieved from the internet URL: < https://www.amazon.com/SPIDERCASE-Fold-Protector-Protection-Protective/dp/B0D625DPX7? > (Year: 2024).*
For Samsung Galaxy Z Fold 6 Case with S Pen Holder, date available Apr. 24, 2025, retrieved May 30, 2025, retrieved from the internet URL: < https://www.amazon.com/dp/B0F5WX8X8S/ref=sspa_dk_detail_0? > (Year: 2025).*

* cited by examiner

Primary Examiner — George J Ulsh
Assistant Examiner — Rodolfo Castro, Jr.
(74) *Attorney, Agent, or Firm* — Bridgeway IP Law Group, PLLC; Jihun Kim; Hyun Woo Shin

(57) **CLAIM**

The ornamental design for a case for electronic communications device, as shown and described.

DESCRIPTION

FIG. **1** is a rear, top, left side perspective view of a case for electronic communications device showing my new design;
FIG. **2** is a front, top, right side perspective view thereof;
FIG. **3** is a front elevation view thereof;
FIG. **4** is a rear elevation view thereof;
FIG. **5** is a left side elevation view thereof;
FIG. **6** is a right side elevation view thereof;
FIG. **7** is a top plan view thereof;
FIG. **8** is a bottom plan view thereof; and,
FIG. **9** is a rear, top, left side perspective view thereof showing a configuration of use.
The broken lines in the drawings show portions of the case for electronic communications device that form no part of the claimed design.

1 Claim, 9 Drawing Sheets

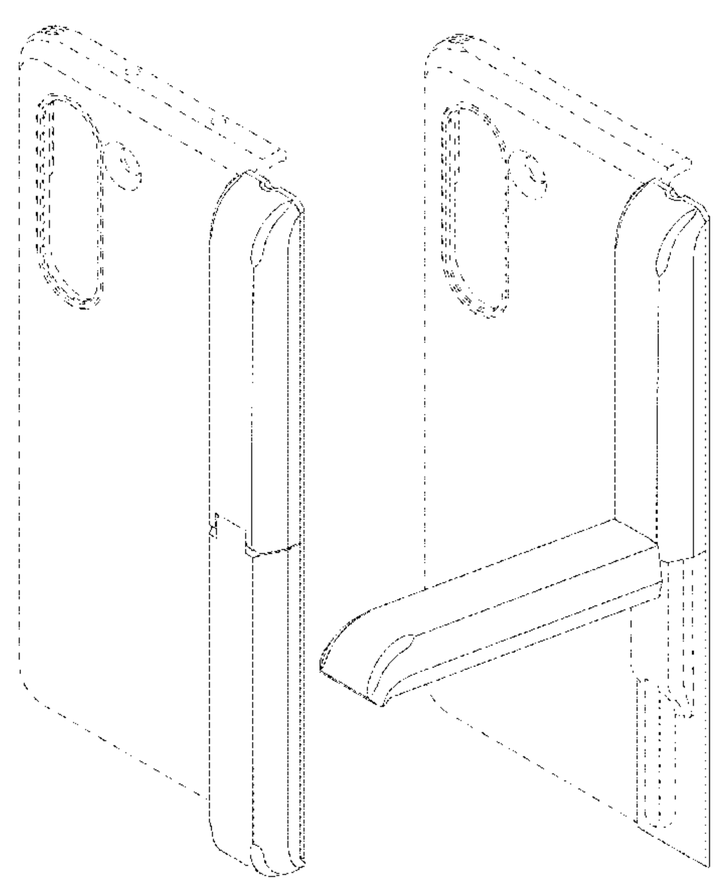

FIG. 1

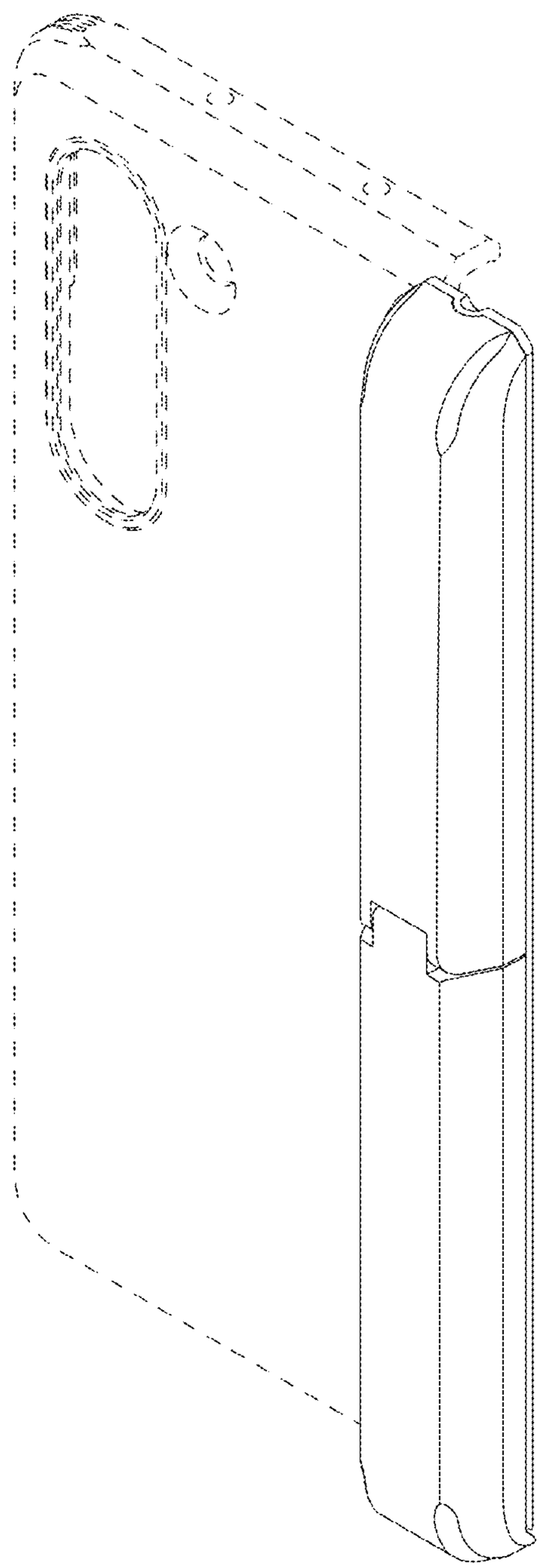

FIG. 2

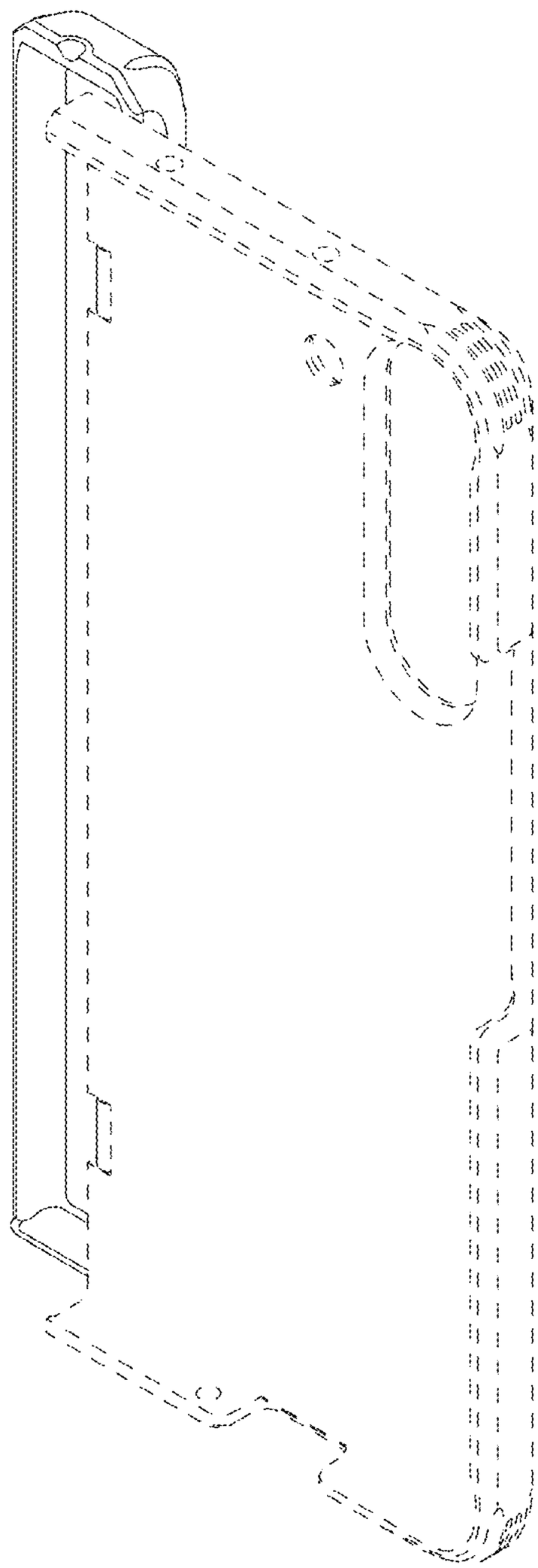

FIG. 3

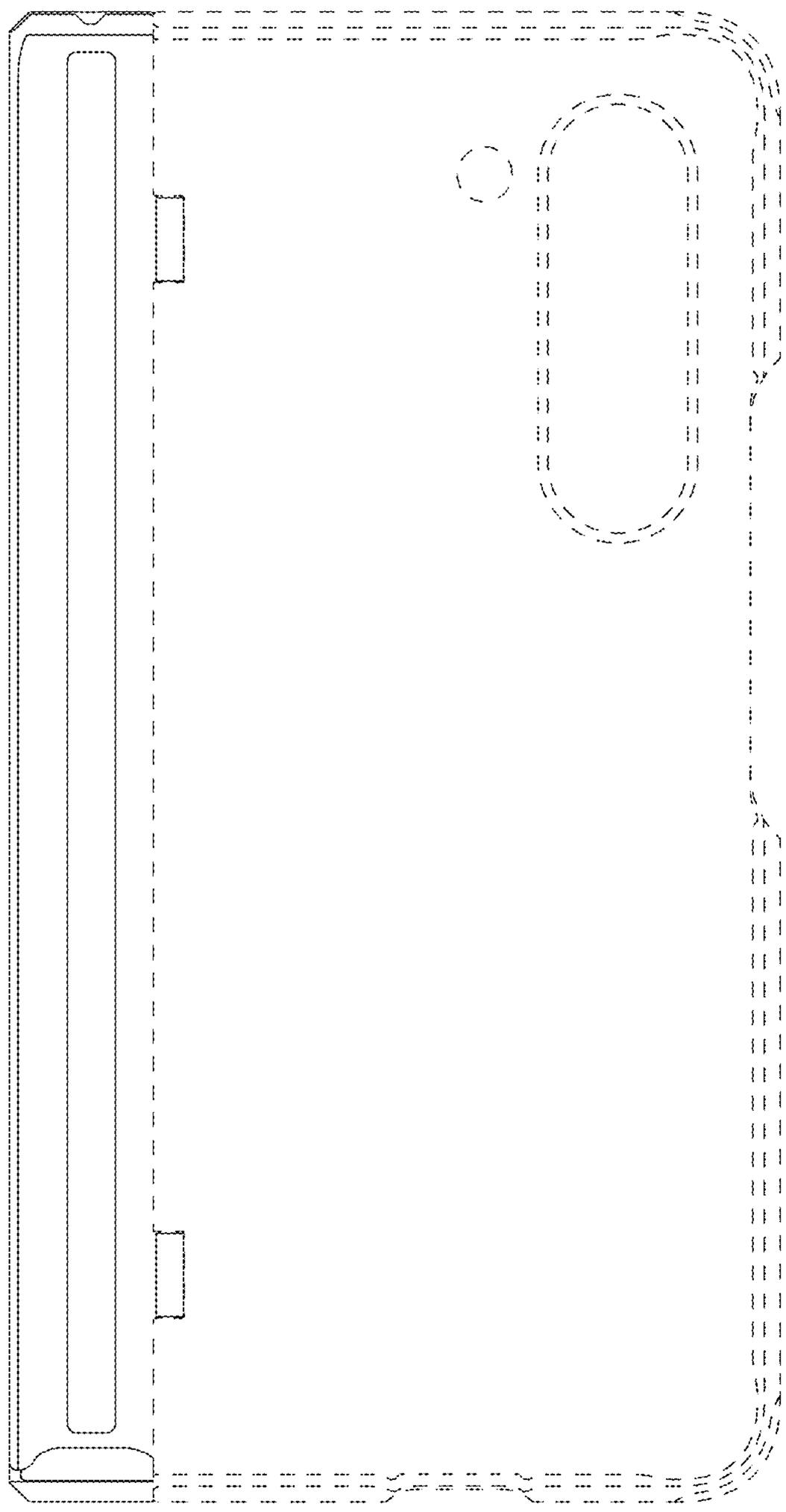

FIG. 4

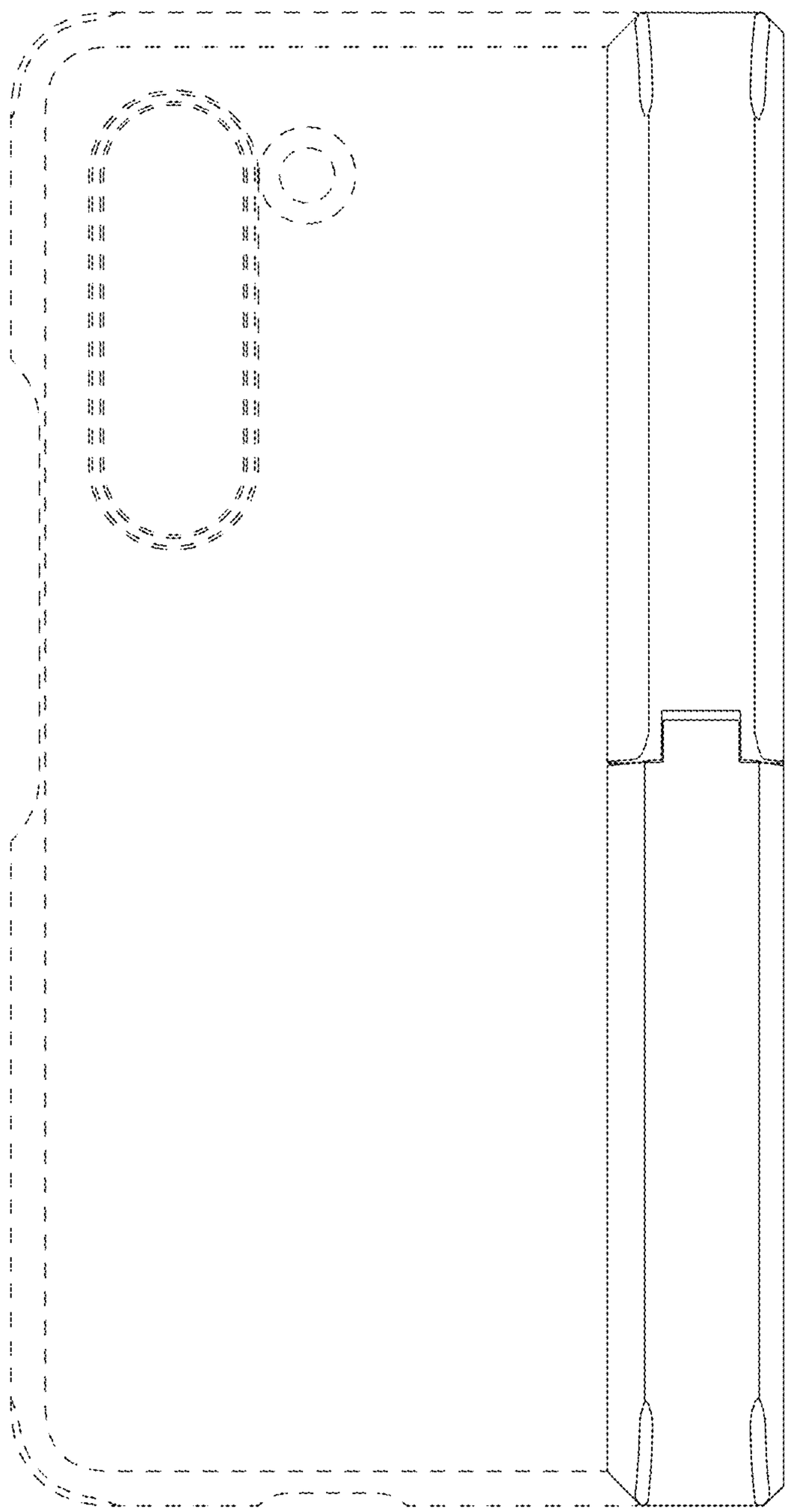

FIG. 5

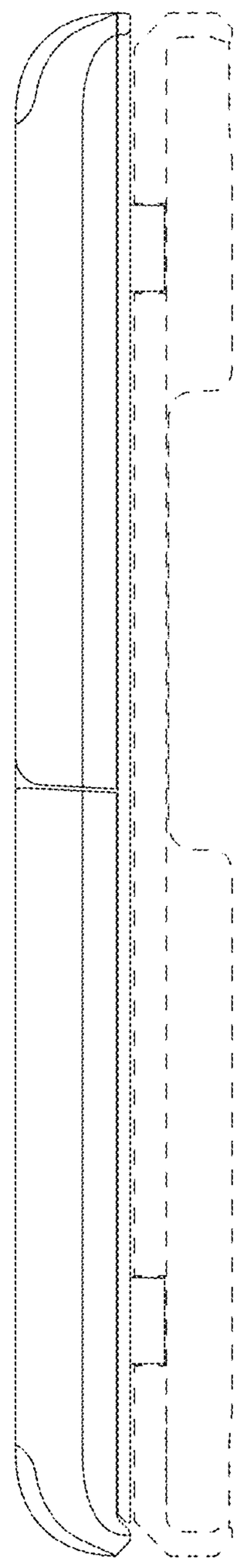

FIG. 6

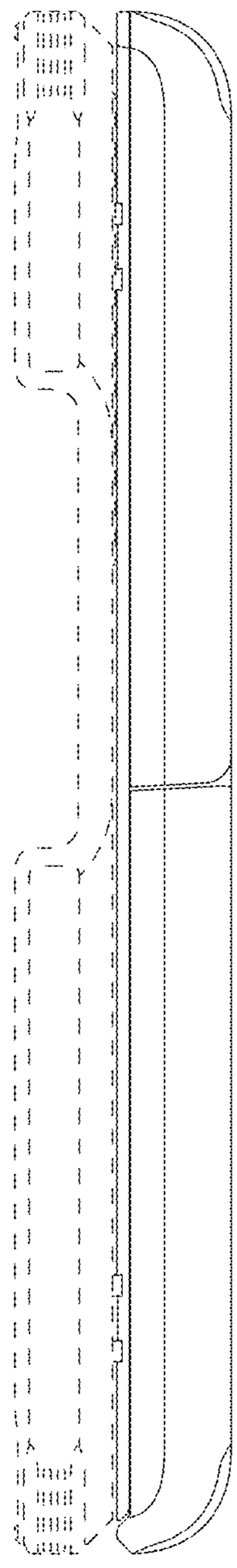

FIG. 7

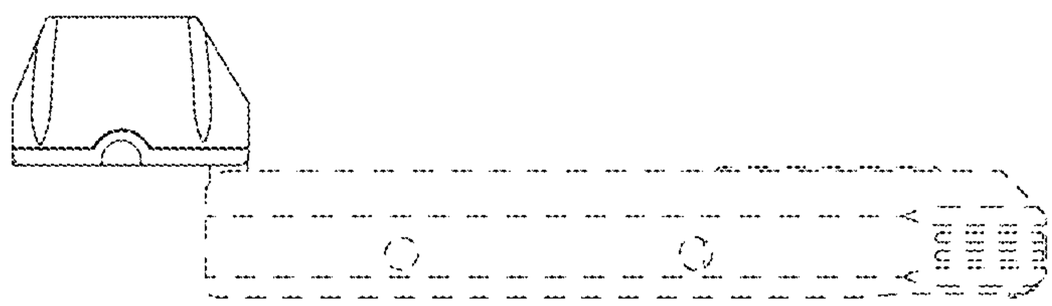

FIG. 8

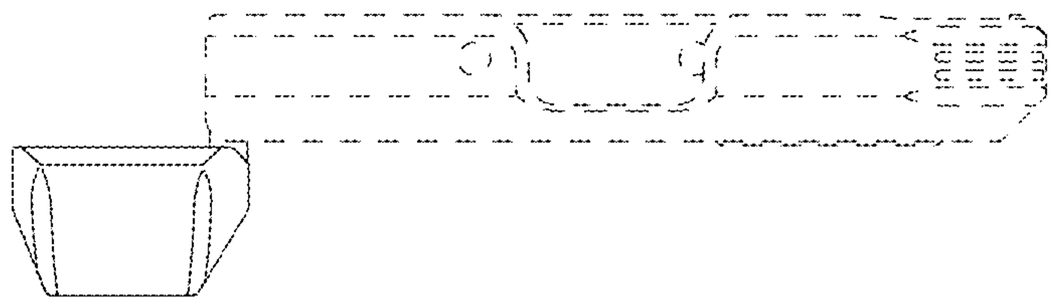
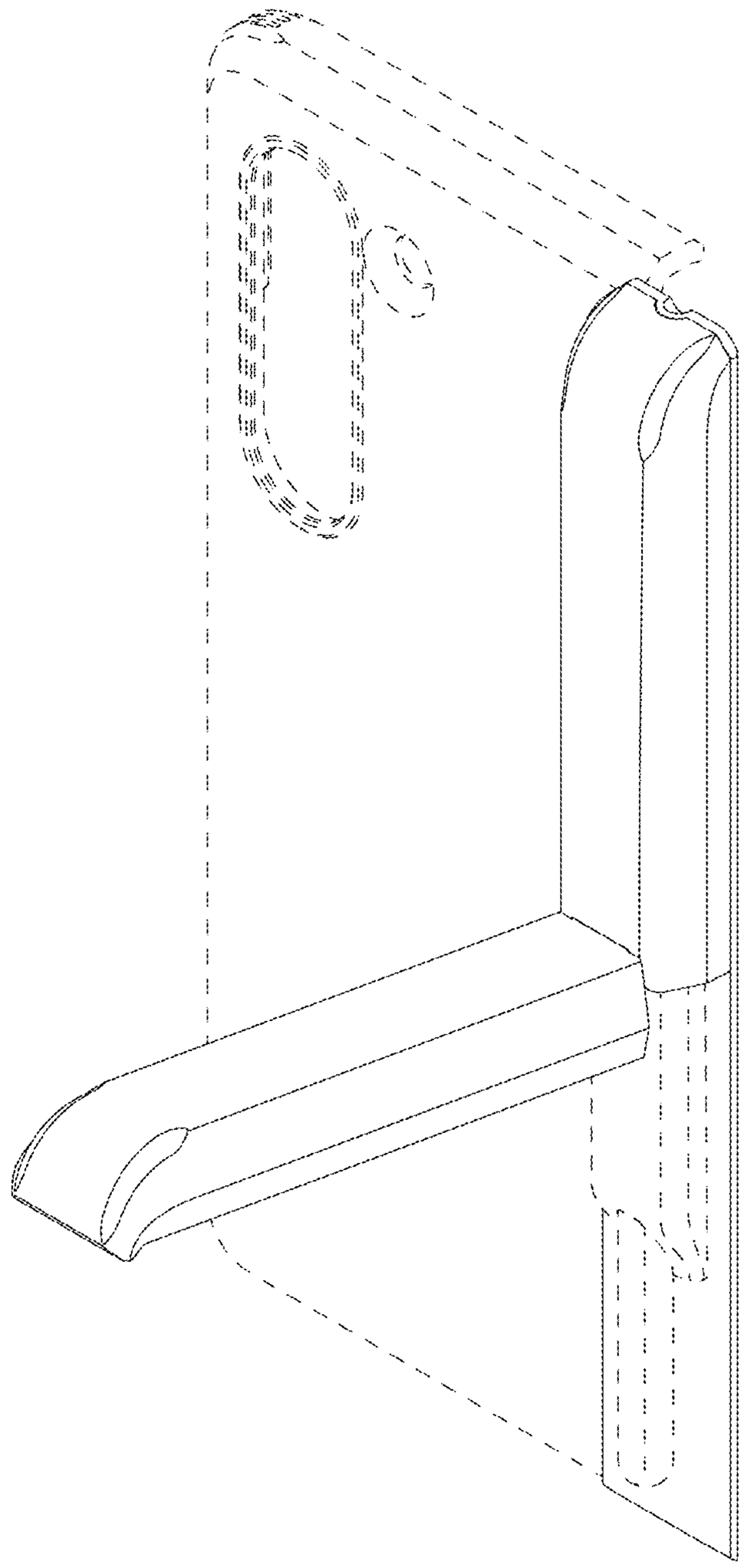
FIG. 9