US0D1088519S

(12) United States Design Patent

Kim et al.

(10) Patent No.: US D1,088,519 S
(45) Date of Patent: ** Aug. 19, 2025

(54) **CARD WALLET**

(71) Applicant: **SPIGEN KOREA CO., LTD.**, Seoul (KR)

(72) Inventors: **Jae Hun Kim**, Seoul (KR); **Jong Hwa Lee**, Seoul (KR)

(73) Assignee: **SPIGEN KOREA CO., LTD.**, Seoul (KR)

(**) Term: **15 Years**

(21) Appl. No.: **29/952,601**

(22) Filed: **Jul. 17, 2024**

(51) **LOC (15) Cl.** **03-01**

(52) **U.S. Cl.**
USPC **D3/247**

(58) **Field of Classification Search**
USPC D3/247, 248, 249, 250, 251, 252, 253
(Continued)

(56) **References Cited**

U.S. PATENT DOCUMENTS

3,299,929 A 1/1967 Shagin et al.
3,882,916 A * 5/1975 Margolis A45C 1/06 150/132

(Continued)

FOREIGN PATENT DOCUMENTS

KR 20-0473836 Y1 8/2014
KR 301179365.0000 * 8/2022

OTHER PUBLICATIONS

Amazon.com, Site visited Jan. 6, 2025, Caseology Folder Pop Magnetic Card Holder, Date first available, May 6, 2024, https://www.amazon.com/Caseology-Non-Slip-Silicone-Magnetic-Compatible/dp/B0CPB453TB?th=1 (Year: 2024).*

(Continued)

Primary Examiner — Brett Miller
Assistant Examiner — Jessica M Gebhart
(74) *Attorney, Agent, or Firm* — Bridgeway IP Law Group, PLLC; Jihun Kim; Hyun Woo Shin

(57) **CLAIM**

The ornamental design for a card wallet as shown and described.

DESCRIPTION

FIG. **1** is a perspective view of a card wallet, showing a first embodiment of our new design;
FIG. **2** is a front elevation view thereof;
FIG. **3** is a rear elevation view thereof;
FIG. **4** is a left side elevation view thereof;
FIG. **5** is a right side elevation view thereof;
FIG. **6** is a top plan view thereof;
FIG. **7** is a bottom plan view thereof;
FIG. **8** is a perspective view of the card wallet showing a second embodiment of our new design;
FIG. **9** is a front elevation view thereof;
FIG. **10** is a rear elevation view thereof;
FIG. **11** is a left side elevation view thereof;
FIG. **12** is a right side elevation view thereof;
FIG. **13** is a top plan view thereof;
FIG. **14** is a bottom plan view thereof;
FIG. **15** is a perspective view of the card wallet showing a third embodiment of our new design;
FIG. **16** is a front elevation view thereof;
FIG. **17** is a rear elevation view thereof;
FIG. **18** is a left side elevation view thereof;
FIG. **19** is a right side elevation view thereof;
FIG. **20** is a top plan view thereof; and,
FIG. **21** is a bottom plan view thereof.
The dash-dash broken lines in the drawing figures depict portions of the card wallet that form no part of the claimed design.
The dot-dash broken lines shown in FIGS. **1-3**, **8-10**, and **15-17** depict stitching which form a part of the claimed design.

1 Claim, 21 Drawing Sheets

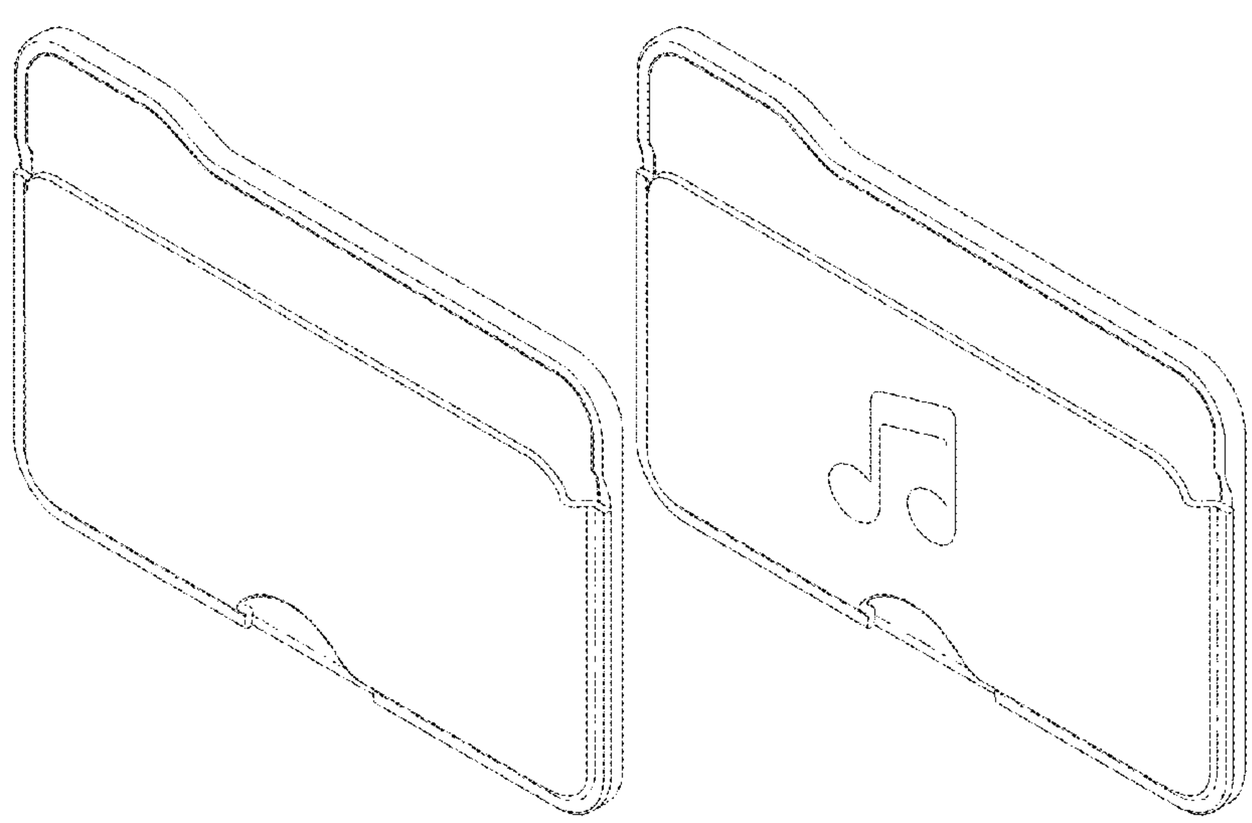

(58) **Field of Classification Search**
CPC A45C 1/06; B29C 51/44
See application file for complete search history.

(56) **References Cited**

U.S. PATENT DOCUMENTS

D403,152	S	*	12/1998	Parad	D3/247
D435,965	S	*	1/2001	Kim	A45C 1/06 D3/249
D509,955	S	*	9/2005	Williams	D3/247
D782,191	S	*	3/2017	Adelman	D3/247
D824,892	S		8/2018	Altschul et al.	
D938,165	S	*	12/2021	Schillings	D3/247
D1,009,463	S	*	1/2024	Jackson	D3/247
2017/0265610	A1	*	9/2017	Smith, II	B29C 51/44
2021/0032009	A1		2/2021	Minson	
2023/0096354	A1		3/2023	Tran et al.	

OTHER PUBLICATIONS

Amazon.com, Site visited Jan. 6, 2025, Speck iphone Wallet, Date first available, Sep. 12, 2023, https://www.amazon.com/Speck-iPhone-Wallet-MagSafe-Accessory/dp/B0CFWFLQWQ (Year: 2023).*
Amazon.com, Site visited Jan. 6, 2025, Smartish MagSafe Wallet, Date first available, Jul. 20, 2023, https://www.amazon.com/dp/B0CCFDMKJD (Year: 2023).*
Iclassic, "Untitled Folder Wallet", Jun. 1, 2023, [online] URL: https://www.youtube.com/watch?v=7hWLvNrM4ZY.
Nik Bentel Studio, "Pc Folder Wallet", Apr. 20, 2024, [online] URL: https://lowheads.com/products/pc-folder-wallet.
Cults PU, "Mac Folder Inspired Mag Safe Card Holder", May 21, 2024, [online] URL: https://cults3d.com/en/3d-model/gadget/mac-folder-inspired-mag-safe-card-holder.

* cited by examiner

FIG. 1

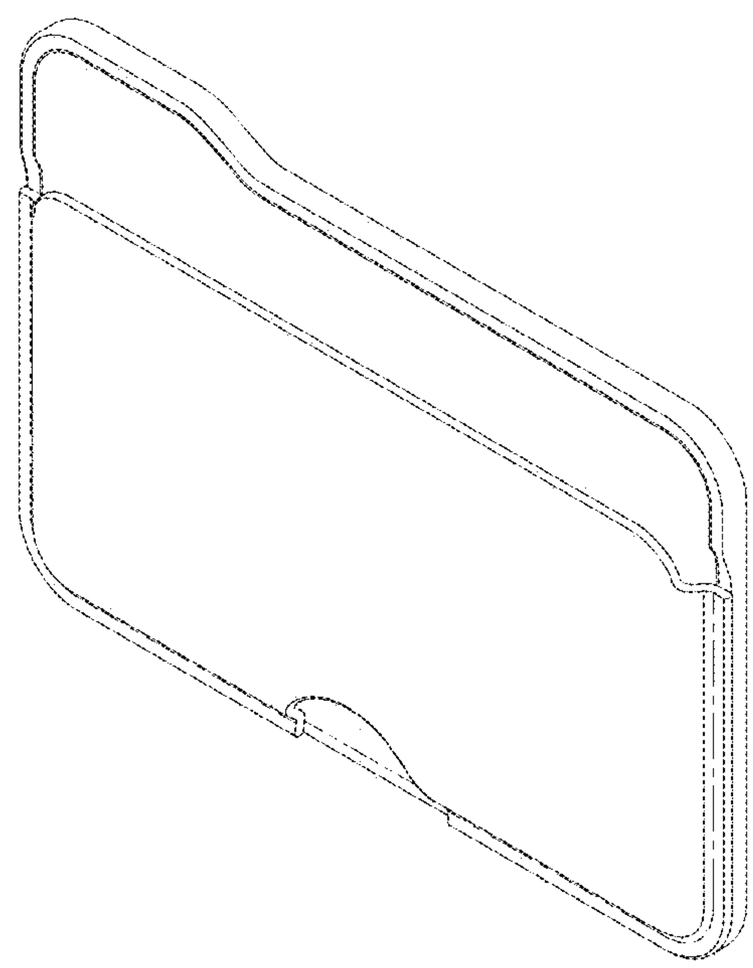

FIG. 2

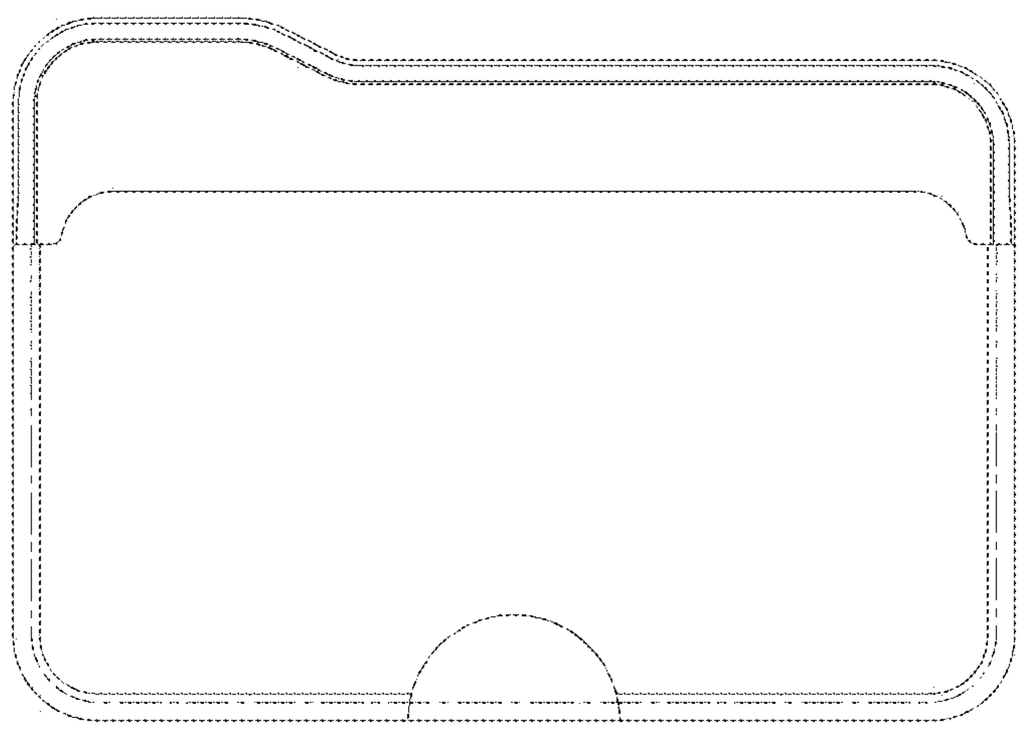

FIG. 3

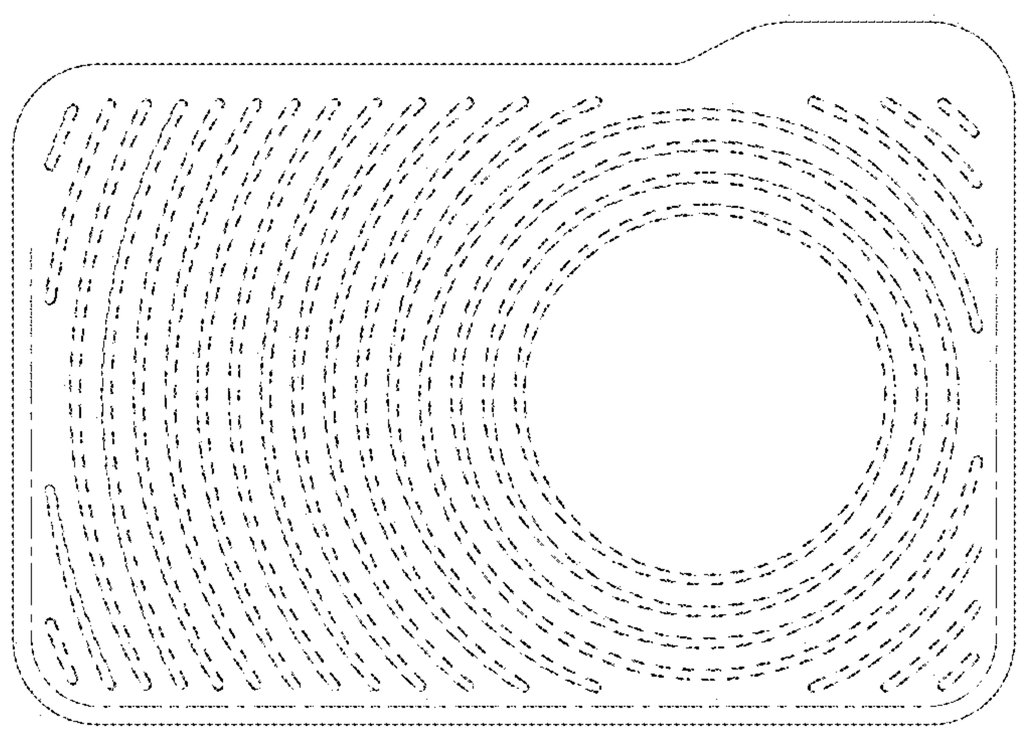

FIG. 4

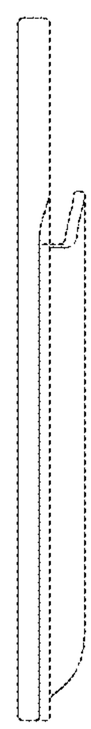

FIG. 5

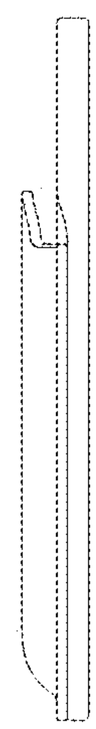

FIG. 6

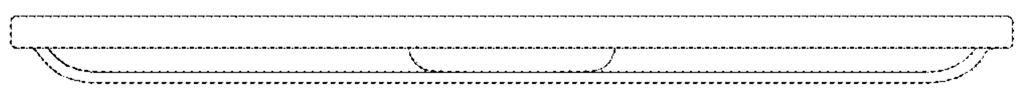

FIG. 7

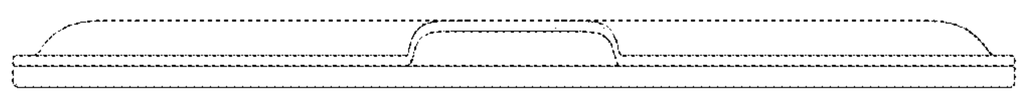

FIG. 8

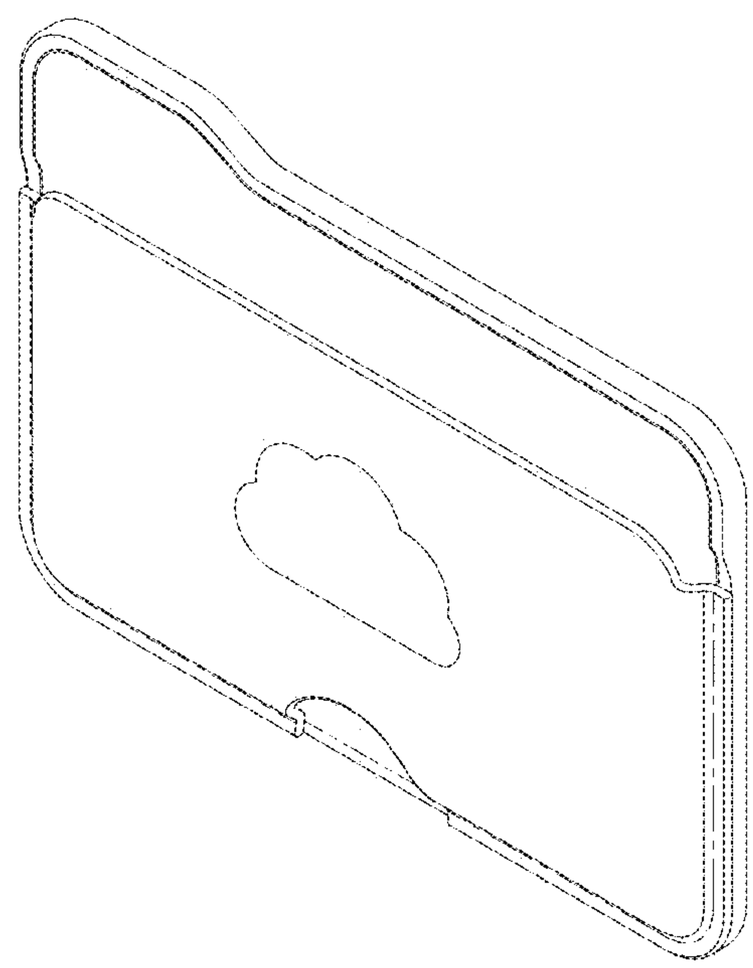

FIG. 9

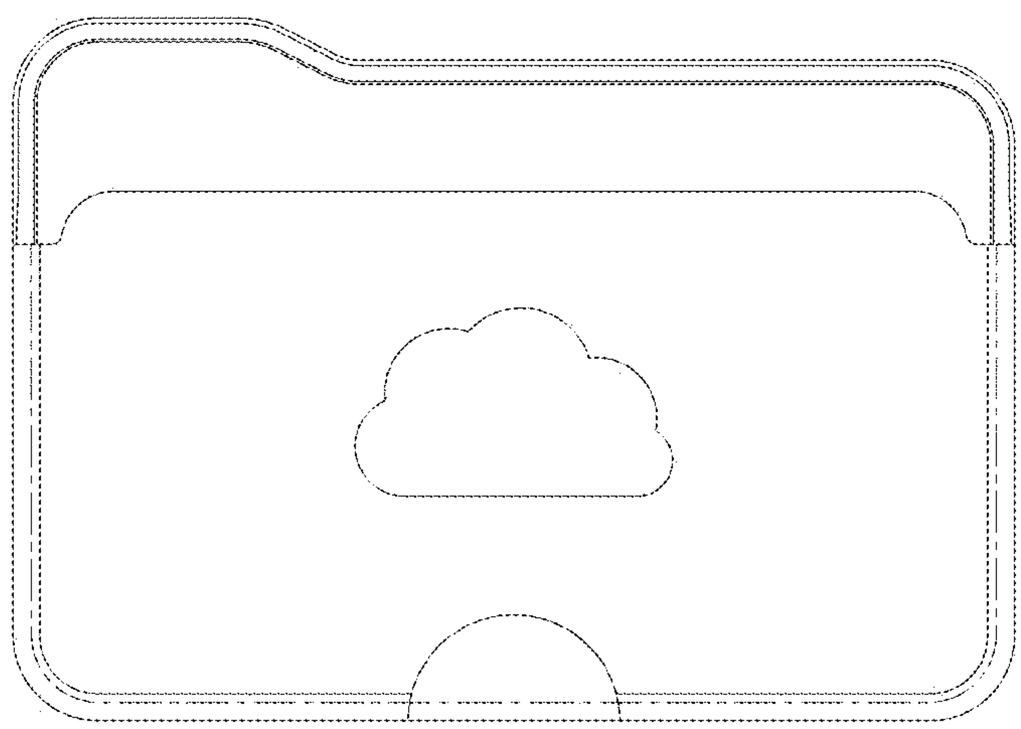

FIG. 10

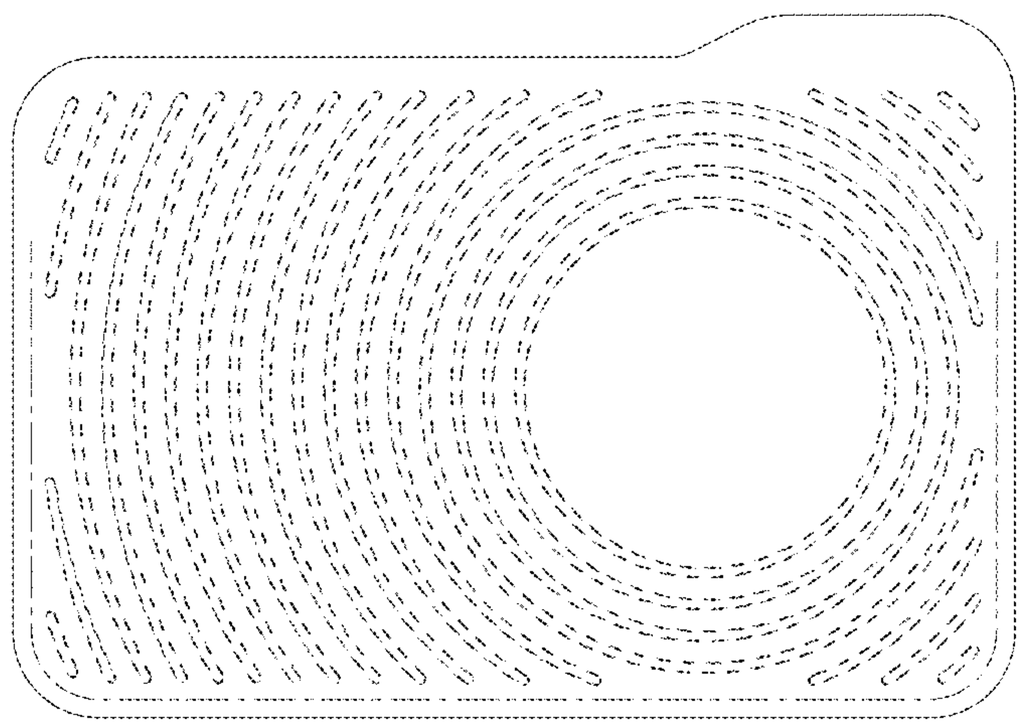

FIG. 11

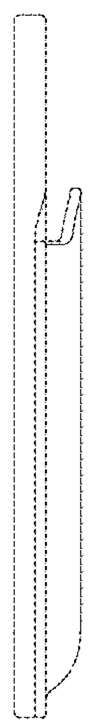

FIG. 12

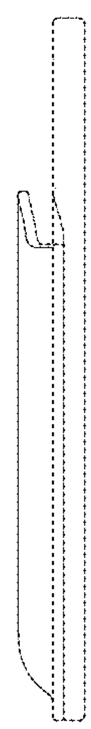

FIG. 13

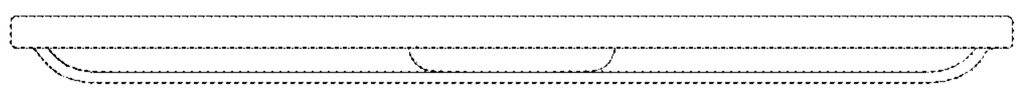

FIG. 14

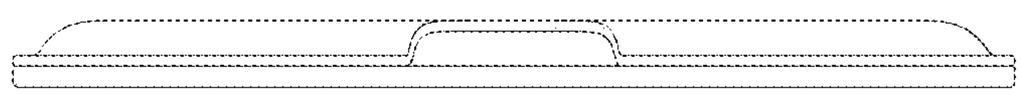

FIG. 15

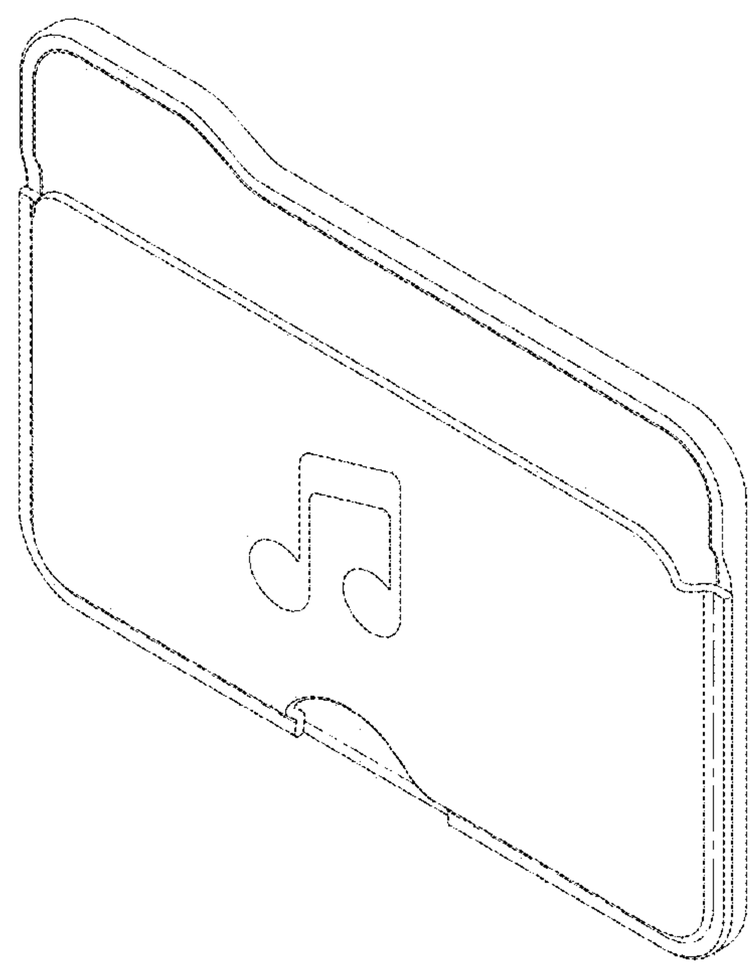

FIG. 16

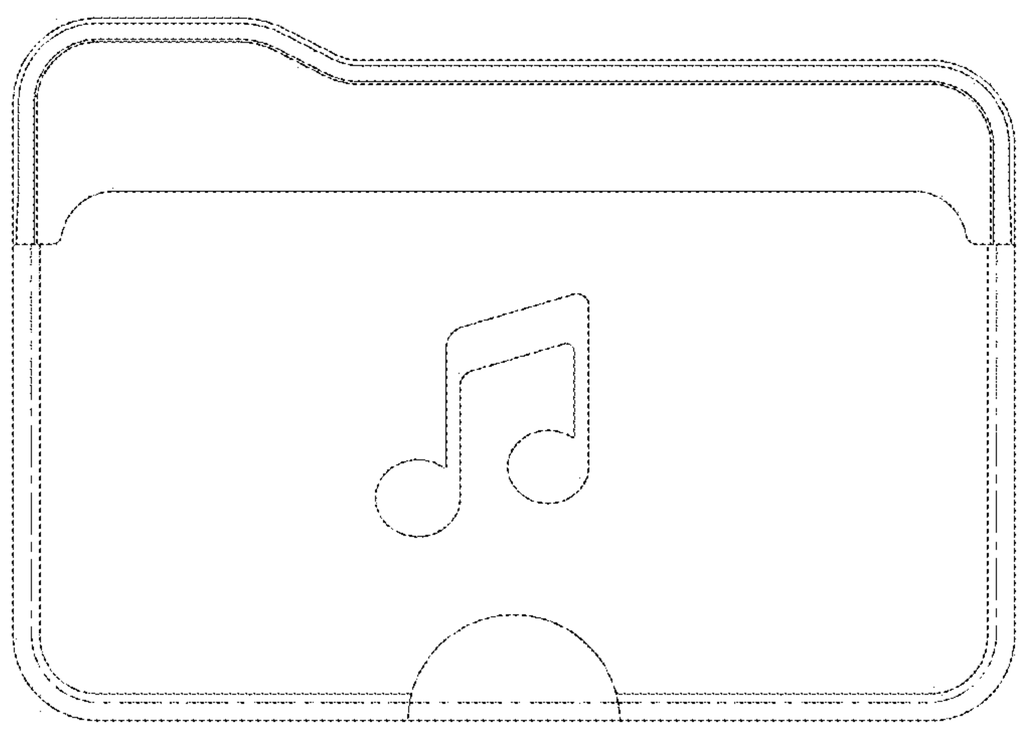

FIG. 17

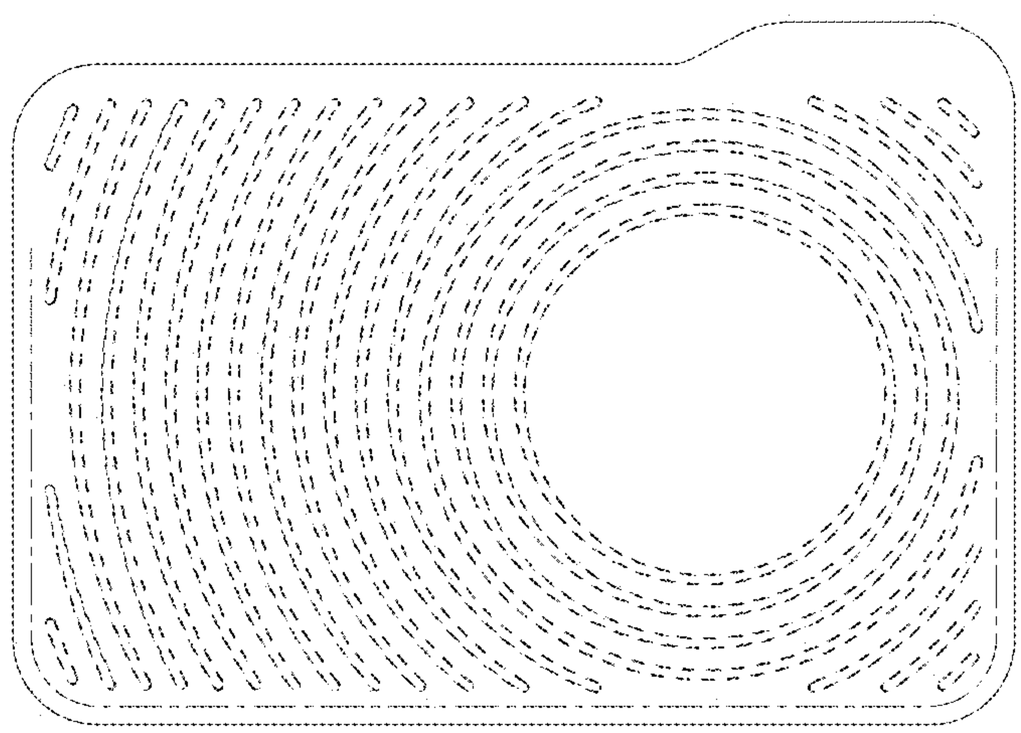

FIG. 18

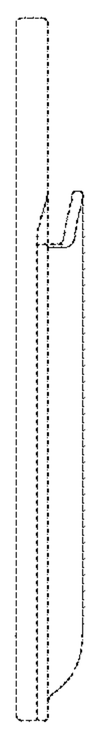

FIG. 19

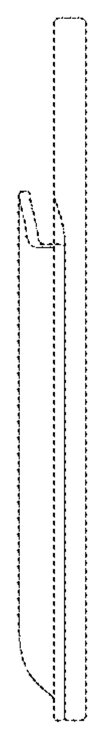

FIG. 20

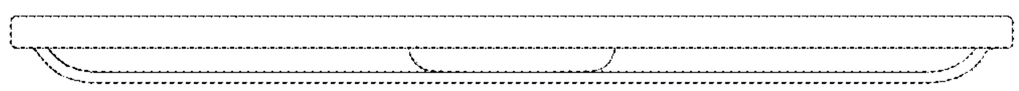
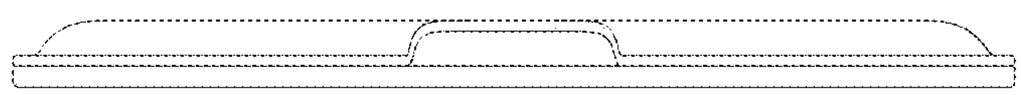
FIG. 21