US0D1083054S

# (12) United States Design Patent

Cho et al.

(10) Patent No.: US D1,083,054 S
(45) Date of Patent: ** Jul. 8, 2025

(54) **AIR CONDITIONER**

(71) Applicant: **LG ELECTRONICS INC.**, Seoul (KR)

(72) Inventors: **Kangeui Cho**, Seoul (KR); **Seungho Baek**, Seoul (KR); **Sungho Lee**, Seoul (KR); **Yoojeung Han**, Seoul (KR)

(73) Assignee: **LG ELECTRONICS INC.**, Seoul (KR)

(**) Term: **15 Years**

(21) Appl. No.: **29/898,917**

(22) Filed: **Aug. 2, 2023**

(30) **Foreign Application Priority Data**

Feb. 3, 2023 (KR) ..... 30-2023-0004142

(51) **LOC (15) Cl.** ..... **23-04**

(52) **U.S. Cl.**
USPC ..... **D23/351**

(58) **Field of Classification Search**
USPC ..... D23/351; 312/236; 62/259.1, 259.4, 62/262, 263, 304
CPC .... F24F 1/00; F24F 1/0007; F24F 1/02; F24F 1/08; F24F 1/42; F24F 1/56; F24F 1/60; F24F 3/044; F24F 3/048; F24F 3/16; F24F 7/00; F24F 7/04; F24F 12/001; F24F 12/006
See application file for complete search history.

(56) **References Cited**

U.S. PATENT DOCUMENTS

D566,820 S * 4/2008 Kim ..... D23/351
D580,032 S * 11/2008 Kim ..... D23/351
D701,596 S * 3/2014 Yoo ..... D23/351
D782,636 S * 3/2017 Woo ..... D23/333
D782,637 S * 3/2017 Woo ..... D23/333
D801,497 S * 10/2017 Kim ..... D23/351
2021/0018186 A1* 1/2021 Bae ..... F24F 1/005
(Continued)

FOREIGN PATENT DOCUMENTS

CN 309024658 S 12/2024

*Primary Examiner* — Keith J Wilson
*Assistant Examiner* — Assam Y. Fittahy
(74) *Attorney, Agent, or Firm* — Birch, Stewart, Kolasch & Birch, LLP

(57) **CLAIM**

The ornamental design for an air conditioner as shown and described.

**DESCRIPTION**

The patent or application file contains at least one color drawing. Copies of this patent or patent application publication with color drawing will be provided by the USPTO upon request and payment of the necessary fee.
FIG. **1** is a front perspective view of an air conditioner showing our new design;
FIG. **2** is a rear perspective view thereof;
FIG. **3** is a front elevation view thereof;
FIG. **4** is a rear elevation view thereof;
FIG. **5** is a left-side elevation view thereof, a right-side elevation view being a mirror image thereof;
FIG. **6** is a top plan view thereof;
FIG. **7** is a bottom plan view thereof;
FIG. **8** is an enlarged view of portion **8** shown in FIG. **1**;
FIG. **9** is an enlarged view of portion **9** shown in FIG. **1**; and,
FIG. **10** is another view of FIG. **1**, shown in a state of the lighting turned on.
The broken lines shown in the drawings depict portions of the air conditioner that form no part of the claimed design.
The colors shown in FIG. **10** are included for illustrative purposes only and form no part of the claimed design.

**1 Claim, 10 Drawing Sheets**
**(1 of 10 Drawing Sheet(s) Filed in Color)**

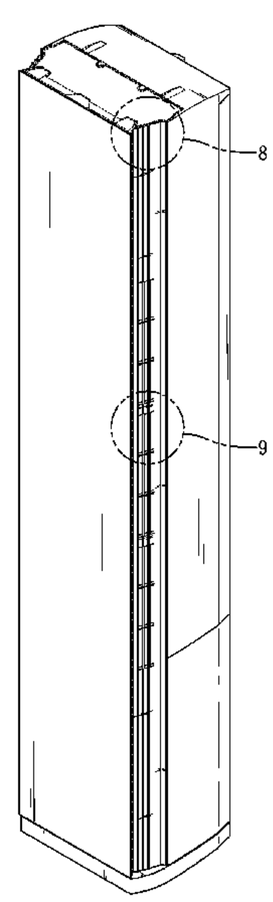

(56) **References Cited**

U.S. PATENT DOCUMENTS

| | | | | |
|---|---|---|---|---|
| 2021/0025599 | A1* | 1/2021 | Choi | F24F 8/80 |
| 2021/0041134 | A1* | 2/2021 | Mun | F16H 1/28 |
| 2021/0088075 | A1* | 3/2021 | Bae | F24F 13/22 |
| 2024/0310064 | A1* | 9/2024 | Choi | F24F 8/108 |

* cited by examiner

*FIG. 1*

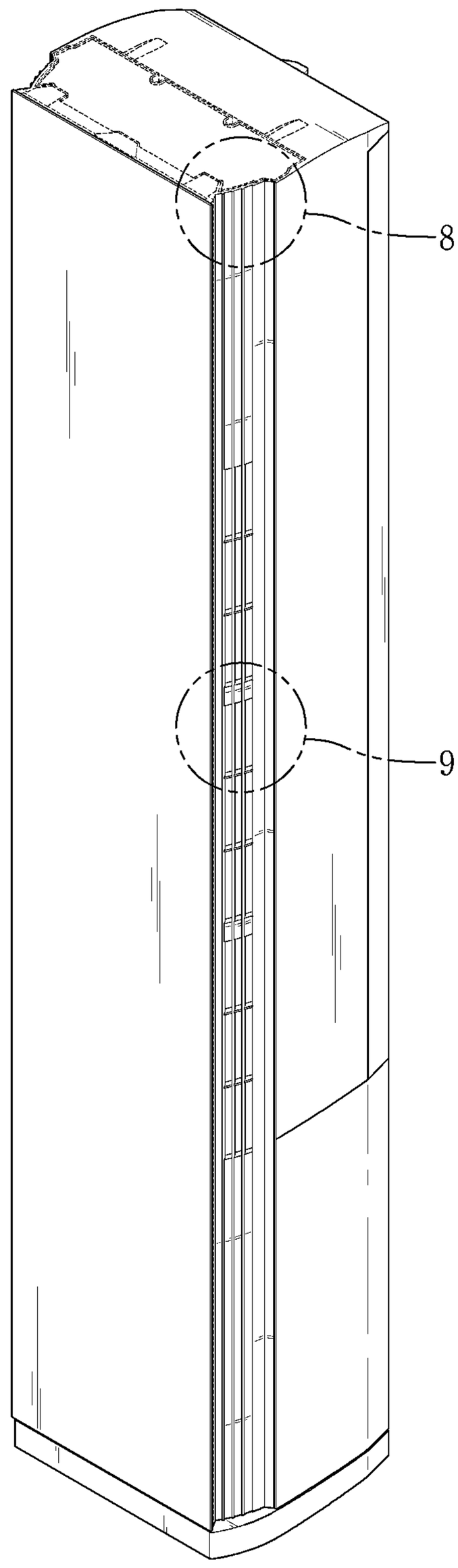

*FIG. 2*

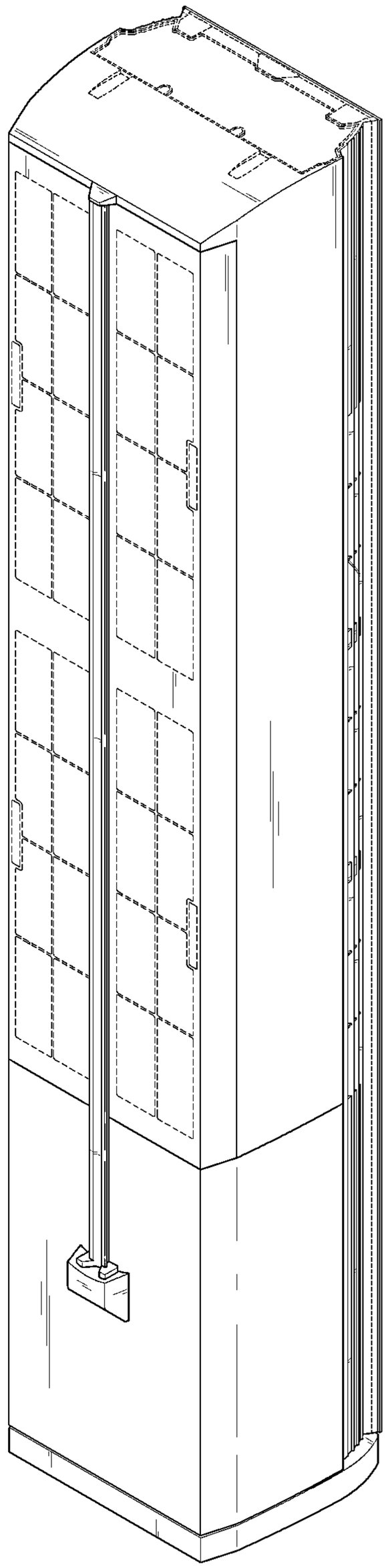

*FIG. 3*

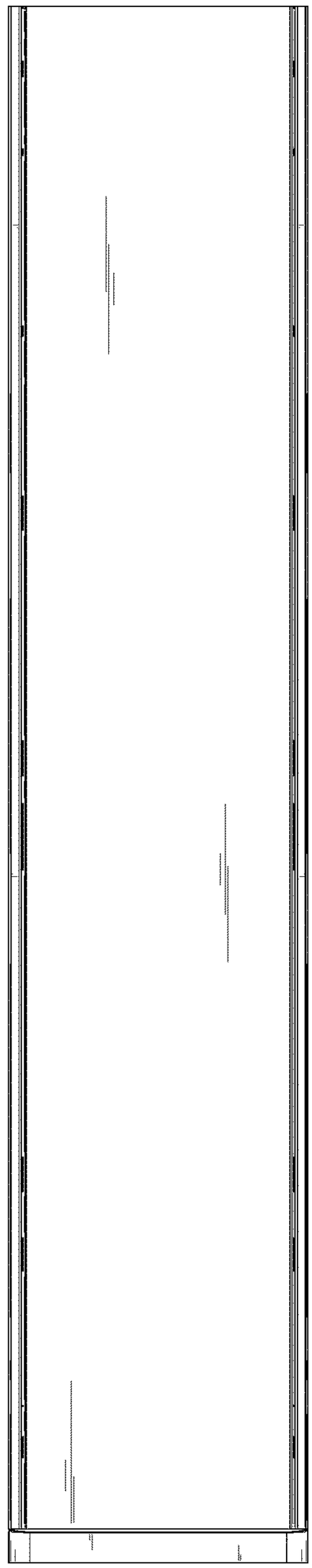

*FIG. 4*

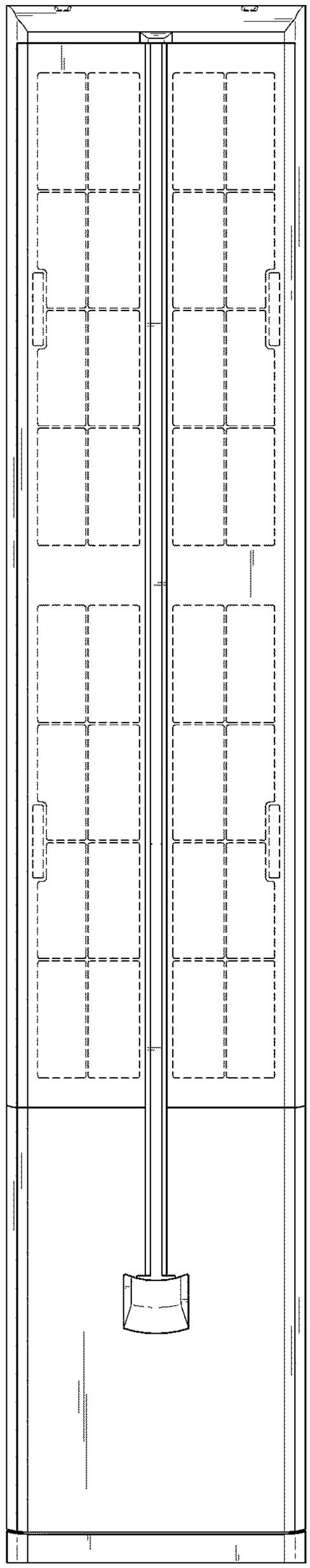

*FIG. 5*

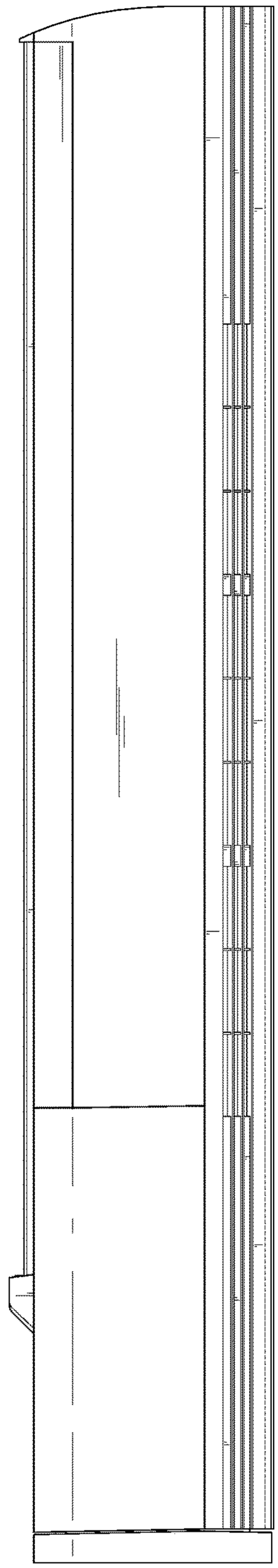

*FIG. 6*

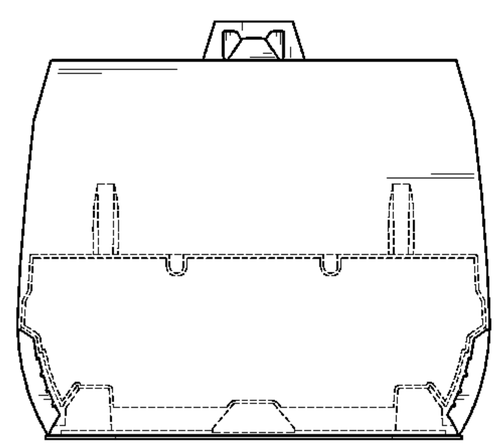

*FIG. 7*

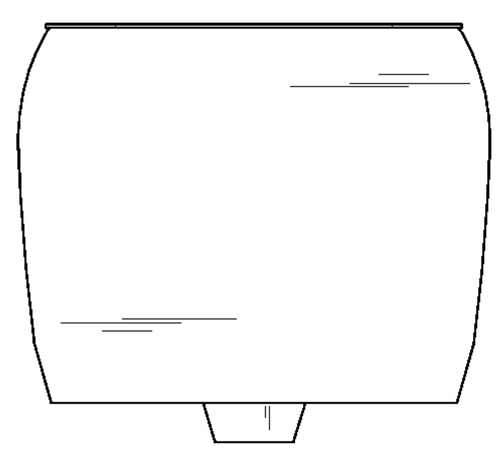

*FIG. 8*

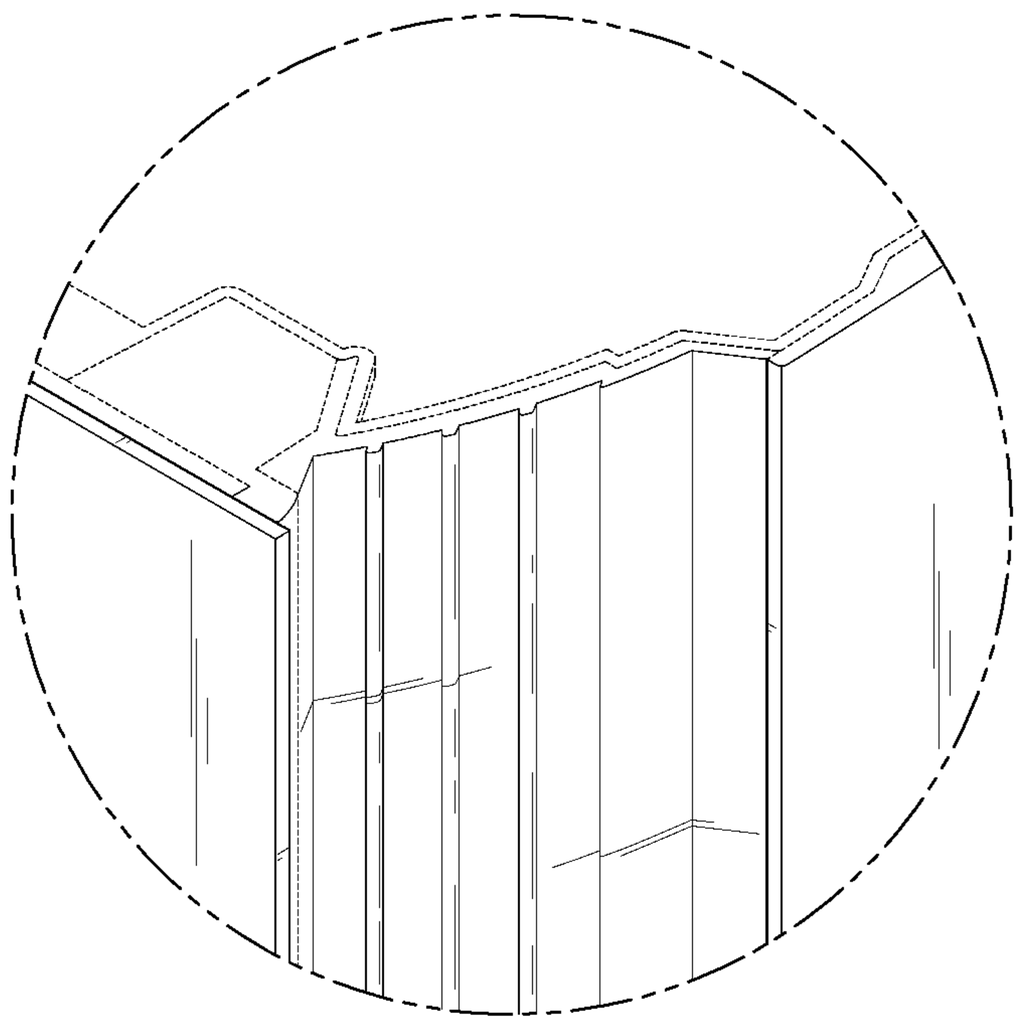

*FIG. 9*

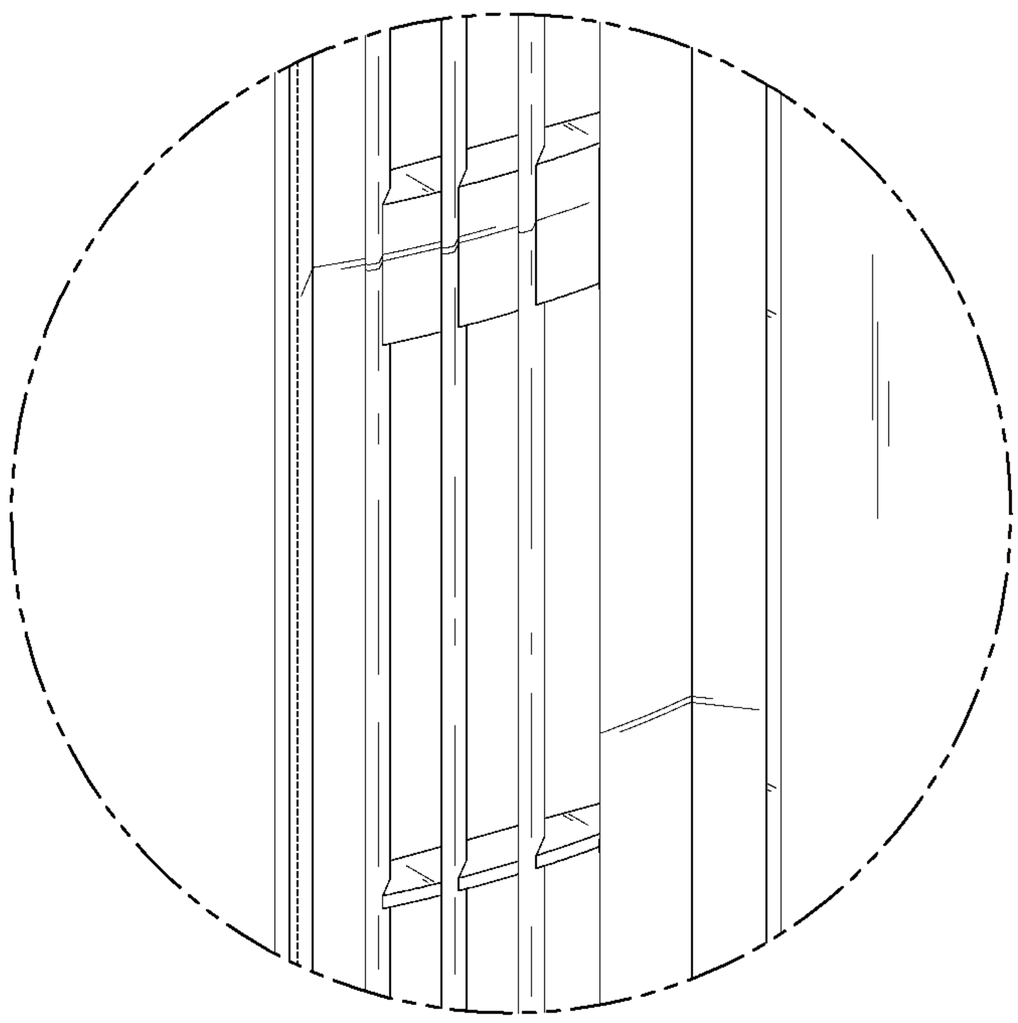
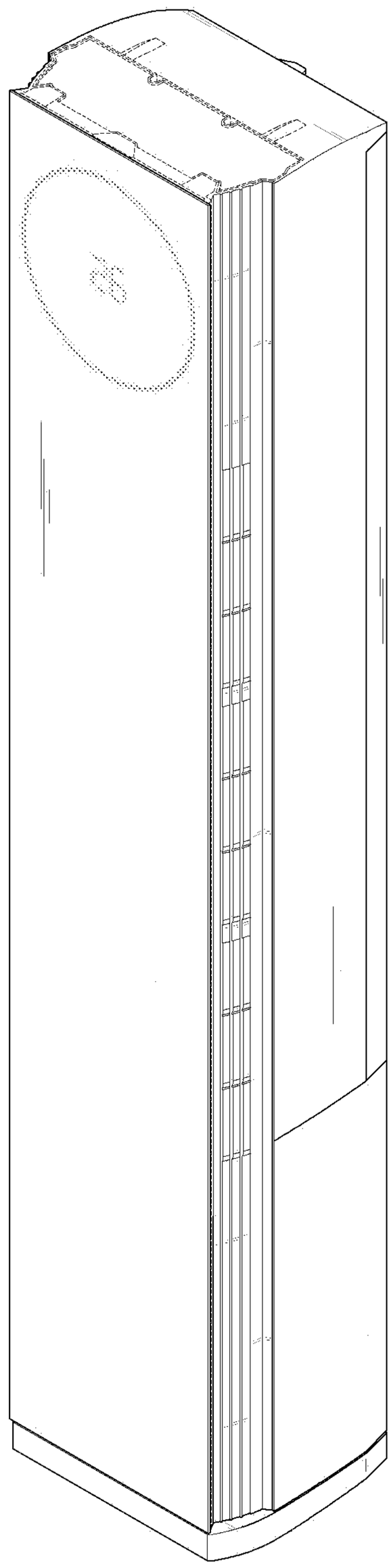
*FIG. 10*