US0D1077916S

(12) **United States Design Patent**
Turgel et al.

(10) **Patent No.: US D1,077,916 S**
(45) **Date of Patent: ** Jun. 3, 2025**

(54) **GAMING MACHINE**

(71) Applicant: **Aristocrat Technologies Australia Pty Limited**, North Ryde (AU)

(72) Inventors: **Ariel Turgel**, San Francisco, CA (US); **Daniel Harden**, Palo Alto, CA (US); **Cheng-Fu Hsieh**, Sunnyvale, CA (US); **Bruce Urban**, Las Vegas, NV (US); **Dominic DeMarco**, Round Rock, TX (US); **Timothy Barbour**, Nolensville, TN (US); **Ryan Priddy**, Franklin, TN (US); **William Lamb**, Eagleville, TN (US); **Raquell Verri**, Franklin, TN (US); **Ryan Slaybaugh**, Nashville, TN (US); **James Vicain**, Allen, TX (US)

(73) Assignee: **Aristocrat Technologies Australia Pty Limited**, North Ryde (AU)

(**) Term: **15 Years**

(21) Appl. No.: **29/861,526**

(22) Filed: **Nov. 30, 2022**

Related U.S. Application Data

(60) Division of application No. 29/696,682, filed on Jun. 28, 2019, now Pat. No. Des. 978,246, which is a continuation of application No. 29/658,892, filed on Aug. 3, 2018, now Pat. No. Des. 917,621.

(51) **LOC (15) Cl.** **21-01**

(52) **U.S. Cl.**
USPC **D21/329**; D21/369

(58) **Field of Classification Search**
USPC D21/324, 325, 326, 327, 328, 329, 369
CPC A63F 13/00; A63F 13/23; A63F 13/35; A63F 13/2145; A63F 13/5378
See application file for complete search history.

(56) **References Cited**

U.S. PATENT DOCUMENTS

D77,825	S	2/1929	Fey
D139,949	S	1/1945	Haggestrom
2,512,171	A	6/1950	Oom
D205,766	S	9/1966	Martignoli
3,788,333	A	1/1974	Johnson
D245,359	S	8/1977	Wilke
4,084,194	A	4/1978	Hector
4,434,931	A	3/1984	Hunt
D321,095	S	10/1991	Bockwoldt
5,129,330	A	7/1992	McKay
D344,296	S	2/1994	McKay
5,310,152	A	5/1994	O'Neill
5,533,605	A	7/1996	Mays
D376,391	S	12/1996	Okumara
5,653,436	A	8/1997	Zouzoulas
5,676,231	A	10/1997	Legras
D392,686	S	3/1998	Sarkisian
5,730,271	A	3/1998	Buchman
D405,473	S	2/1999	Tikhonski
D407,119	S	3/1999	Kwan
5,907,141	A	5/1999	Deaville
D411,582	S	6/1999	Muraki
5,993,317	A	11/1999	Majima
5,996,888	A	12/1999	Gromatzky
6,019,207	A	2/2000	Cole
D421,631	S	3/2000	Tsuda
D434,451	S	11/2000	Grimshaw
D452,710	S	1/2002	Ragot
D455,789	S	4/2002	Schlueter
D460,915	S	7/2002	Lynch
6,416,027	B1	7/2002	Hart
6,464,586	B1	10/2002	Kamata
D467,977	S	12/2002	Gatto
6,530,842	B1	3/2003	Wells
6,749,515	B2	6/2004	Hedrick
D501,889	S	2/2005	Harris
D502,019	S	2/2005	Kaiser
D509,543	S	9/2005	Hillstrom
6,976,919	B2	12/2005	Cole
7,044,423	B2	5/2006	Bober
D537,482	S	2/2007	Gadda
D544,027	S	6/2007	Nunn
7,267,613	B2	9/2007	Cole
D559,328	S	1/2008	Rasmussen
D562,576	S	2/2008	Ritzel

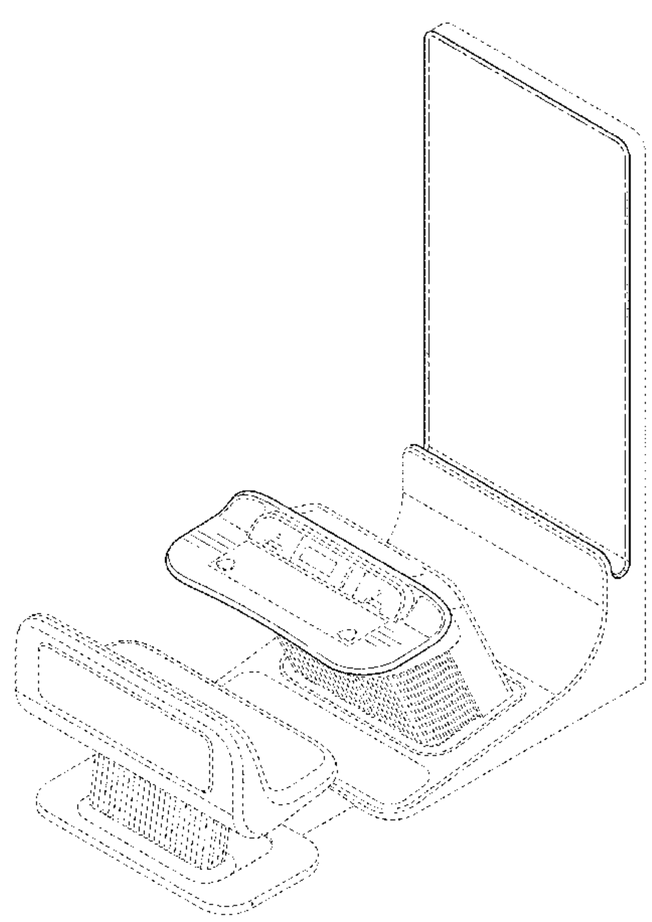

D570,121 S 6/2008 Sammons
D577,075 S 9/2008 Bode
7,533,762 B2 5/2009 Kuttel
D594,068 S 6/2009 Hsu
D602,706 S 10/2009 Cramer
D603,909 S 11/2009 De Viveiros Ortiz
7,832,799 B2 11/2010 Davis, Jr.
7,891,551 B2 2/2011 Cha
D637,651 S 5/2011 Hase
D639,086 S 6/2011 Curbbun
7,971,775 B2 7/2011 Saltsov
D642,625 S * 8/2011 Assa D21/329
8,012,027 B2 9/2011 McGahn
D647,143 S 10/2011 Yi
8,083,458 B2 12/2011 Wilkie
8,113,517 B2 2/2012 Canterbury
D658,721 S 5/2012 Yang
8,210,949 B2 7/2012 Graf
8,356,703 B2 1/2013 Vysma
8,366,555 B2 2/2013 McGahn
8,419,550 B2 4/2013 Anthony
8,444,482 B2 5/2013 Aoki
8,576,553 B2 11/2013 Myerchin
8,651,963 B1 2/2014 Thompson
D704,273 S 5/2014 Chudek
D706,741 S 6/2014 Myers
D707,646 S * 6/2014 Kim ..... D14/138 G
8,740,188 B1 6/2014 Foster
8,747,225 B2 6/2014 Canterbury
D708,459 S 7/2014 Heirakuji
8,783,552 B2 7/2014 Xu
D713,811 S * 9/2014 Isaacs ..... D14/138 AA
D714,269 S * 9/2014 Lee D14/248
D714,270 S * 9/2014 Lee D14/248
8,858,343 B2 10/2014 Filipour
8,894,487 B2 11/2014 Granger
D719,615 S 12/2014 Inoue
D723,626 S * 3/2015 Vasquez D21/370
8,986,109 B2 3/2015 Graf
D736,752 S * 8/2015 Lee D14/248
D740,887 S 10/2015 Randazzo
D748,729 S 2/2016 Thomaselli
9,478,097 B2 * 10/2016 Hennessy G07F 17/3211
D770,450 S * 11/2016 Bae D14/374
9,721,414 B2 8/2017 Ledoux
9,756,941 B1 9/2017 Rowland
D802,676 S 11/2017 Steelman
D805,047 S 12/2017 Dry
D808,467 S 1/2018 Huang
9,858,750 B2 1/2018 Kovacs
D812,145 S 3/2018 Huang
D818,048 S 5/2018 Calhoun
D820,915 S 6/2018 Lee
D824,353 S 7/2018 Won
D833,535 S 11/2018 Lim
D839,357 S 1/2019 Steelman
D842,929 S 3/2019 Hung
D842,932 S * 3/2019 Stair D21/369
D843,459 S * 3/2019 Castro D21/369
D843,463 S 3/2019 Castro
D843,465 S 3/2019 Castro
D843,472 S 3/2019 Castro
D843,473 S * 3/2019 Zedell, Jr. D21/369
D843,476 S 3/2019 Lesley
D843,479 S 3/2019 Castro
D844,062 S 3/2019 Lesley
D847,905 S 5/2019 Lewis
D848,529 S 5/2019 Lee
D849,149 S 5/2019 Bussey
10,287,148 B2 5/2019 Urban
D852,890 S 7/2019 Ross
D864,305 S 10/2019 Ortiz De Viveiros
10,445,977 B2 10/2019 Tovar
D866,666 S 11/2019 Ditton
D866,667 S * 11/2019 Stair D21/369
D867,461 S 11/2019 Huang
D868,716 S 12/2019 Hodgson
10,502,360 B2 12/2019 Castro
10,515,212 B1 12/2019 McClintock
10,573,118 B2 2/2020 Goldstein
D880,606 S * 4/2020 Glenn D21/369
D880,608 S * 4/2020 Glenn D21/369
D881,285 S * 4/2020 Glenn D21/369
D883,278 S 5/2020 Yepez
D887,496 S 6/2020 Urban
D888,834 S * 6/2020 Lee D21/369
D889,546 S 7/2020 Jones
D889,547 S * 7/2020 Jones D21/325
D890,264 S * 7/2020 Johnson D21/369
D890,265 S * 7/2020 Johnson D21/369
D890,848 S 7/2020 Johnson
D890,850 S * 7/2020 Johnson D21/369
D890,851 S * 7/2020 Johnson D21/369
10,702,772 B2 7/2020 Achmueller
10,716,224 B2 7/2020 Dunn
D893,630 S 8/2020 Urban
D898,127 S * 10/2020 Stair D21/369
10,810,832 B2 10/2020 Gallagher
10,825,286 B2 11/2020 Gallagher
D904,098 S 12/2020 Le
D905,172 S * 12/2020 Zedell, Jr. D21/369
D907,124 S 1/2021 DeMarco
D907,708 S 1/2021 DeMarco
D907,709 S 1/2021 DeMarco
D907,714 S 1/2021 Abele
D908,171 S 1/2021 DeMarco
D908,173 S 1/2021 DeMarco
D909,479 S 2/2021 Abele
D909,490 S 2/2021 DeMarco
D909,491 S 2/2021 DeMarco
D910,119 S 2/2021 DeMarco
D910,763 S 2/2021 DeMarco
D911,055 S 2/2021 Wang
10,922,914 B2 2/2021 Nireki
D911,724 S 3/2021 Gary
D911,992 S 3/2021 Stinson
D913,379 S 3/2021 Calhoun
D915,093 S 4/2021 Shen
D915,315 S 4/2021 Ho
D917,621 S 4/2021 Kaminkow
D918,300 S 5/2021 DeMarco
D918,303 S 5/2021 DeMarco
D918,850 S 5/2021 Shim
D918,852 S 5/2021 Shim
D919,010 S 5/2021 Bussey
D919,585 S 5/2021 Shim
D919,586 S 5/2021 Lim
D920,323 S 5/2021 Lee
D920,429 S 5/2021 Hoinowski
D921,762 S 6/2021 Hodgson
D926,889 S * 8/2021 Bruzzese D21/369
D934,347 S * 10/2021 Ocampo D21/370
11,151,833 B2 10/2021 Hemerick
11,151,834 B2 10/2021 Urban
D934,953 S * 11/2021 Kaminkow D21/300
D936,150 S * 11/2021 Bussey D21/369
D937,354 S * 11/2021 Glenn, II D21/369
D939,025 S * 12/2021 Bruzzese D21/369
D939,026 S * 12/2021 Bruzzese D21/369
11,195,369 B2 12/2021 Barbour
11,236,855 B1 2/2022 Lee
D945,196 S 3/2022 Waller
11,262,019 B2 3/2022 Woo
D954,150 S * 6/2022 Seckel D21/329
D954,830 S * 6/2022 Bussey D21/325
D954,844 S * 6/2022 Rosander D21/369
D957,153 S 7/2022 Yuglich
D959,557 S 8/2022 Sakai
D959,559 S 8/2022 Clear
D963,045 S * 9/2022 Coon D21/369
D964,471 S * 9/2022 Holland D21/369
D969,926 S * 11/2022 Lewis D21/369
D971,323 S 11/2022 Hoinowski
D971,324 S 11/2022 Park
11,532,199 B2 12/2022 Urban
D974,472 S * 1/2023 Colvin D21/329
D978,246 S 2/2023 Turgel
D978,249 S 2/2023 Urban

11,587,389	B2		2/2023	Barbour	
D981,741	S		3/2023	Schoonmaker	
D988,411	S	*	6/2023	Colvin	D21/369
D995,636	S		8/2023	Ocampo	
11,744,027	B2		8/2023	Hsu	
D999,289	S	*	9/2023	Thompson	D21/369
D1,006,885	S	*	12/2023	Jadeja	D21/369
D1,009,165	S	*	12/2023	Coon	D21/369
D1,010,739	S	*	1/2024	Urban	D21/385
D1,011,432	S	*	1/2024	Schoonmaker	D21/369
D1,013,043	S	*	1/2024	Stair	D21/369
D1,013,787	S	*	2/2024	Schoonmaker	D21/369
D1,016,918	S	*	3/2024	Santisi	D21/369
D1,019,785	S	*	3/2024	Urban	D21/325
D1,031,855	S	*	6/2024	Glenn, II	D21/369
D1,042,644	S	*	9/2024	Urban	D21/369
D1,043,838	S	*	9/2024	Stair	D21/369
D1,051,994	S	*	11/2024	Urban	D21/369
D1,057,026	S	*	1/2025	Lee	D21/369
D1,057,027	S	*	1/2025	Lewis	D21/369
D1,057,837	S	*	1/2025	Zedell, Jr.	D21/369
D1,058,680	S	*	1/2025	Rosander	D21/369
2002/0056960	A1		5/2002	Bergeron	
2002/0066636	A1		6/2002	Saltsov	
2002/0198034	A1		12/2002	Wang	
2003/0064791	A1		4/2003	Hedrick	
2003/0195037	A1		10/2003	Vuong	
2005/0109892	A1		5/2005	Bober	
2005/0212656	A1		9/2005	Denison	
2005/0277477	A1		12/2005	Hajder	
2006/0081441	A1		4/2006	Vysma	
2006/0205504	A1		9/2006	Okada	
2007/0000993	A1		1/2007	Graef	
2007/0099708	A1		5/2007	Okada	
2007/0221810	A1		9/2007	Liao	
2008/0054561	A1		3/2008	Canterbury	
2008/0055491	A1		3/2008	Gordon	
2008/0087521	A1		4/2008	Cole	
2008/0113740	A1		5/2008	McGahn	
2008/0113768	A1		5/2008	Baerlocher	
2008/0113820	A1		5/2008	Tedsen	
2008/0119289	A1		5/2008	Lind	
2008/0132313	A1		6/2008	Rasmussen	
2008/0254862	A1		10/2008	Mattice	
2008/0254881	A1		10/2008	Lutnick	
2009/0280911	A1		11/2009	Tsao	
2010/0102502	A1		4/2010	Saltsov	
2010/0120530	A1		5/2010	Lesley	
2010/0289208	A1		11/2010	Clauser	
2011/0011699	A1		1/2011	Shuren	
2011/0094850	A1		4/2011	Seki	
2013/0035159	A1		2/2013	Cornell	
2013/0180821	A1		7/2013	Clauser	
2013/0279090	A1		10/2013	Brandt	
2015/0048230	A1		2/2015	Satterfield	
2015/0211675	A1		7/2015	Shyu	
2015/0336491	A1		11/2015	Abe	
2016/0125681	A1		5/2016	Ledoux	
2016/0335836	A1		11/2016	Castro	
2017/0039812	A1		2/2017	Baron	
2017/0169663	A1		6/2017	Froy	
2017/0294072	A1		10/2017	Achmüller	
2018/0053373	A1		2/2018	Goldstein	
2018/0075707	A1		3/2018	Hirai	
2018/0082523	A1		3/2018	Palermo	
2018/0190068	A1		7/2018	Priddy	
2019/0012874	A1		1/2019	Goldstein	
2019/0046872	A1		2/2019	Glenn, II	
2019/0080547	A1		3/2019	Urban	
2019/0096161	A1		3/2019	Barbour	
2019/0096169	A1		3/2019	Tovar	
2019/0096170	A1		3/2019	Lewis	
2019/0096174	A1		3/2019	Ambrecht	
2019/0099000	A1		4/2019	Waller	
2019/0102982	A1		4/2019	Barbour	
2019/0254433	A1		8/2019	Smit	
2019/0317549	A1		10/2019	Gurr	
2020/0090455	A1		3/2020	Ambrecht	
2020/0312088	A1		10/2020	Penacho	
2021/0247018	A1		8/2021	Yamada	
2021/0350656	A1		11/2021	Barbour	
2022/0101685	A1		3/2022	Rodriguez	
2022/0148374	A1		5/2022	Penacho	
2022/0301384	A1		9/2022	Rodriguez	
2023/0026251	A1		1/2023	Tracy	
2023/0045373	A1		2/2023	Rodd	
2023/0111030	A1		4/2023	McClintock	
2023/0121737	A1		4/2023	Winston	

FOREIGN PATENT DOCUMENTS

AU	2001051810	A1	12/2001
CA	178255		11/2018
DE	0015402120001		6/2009
DE	0015402380001		8/2009
DE	0028613360001		11/2015
EP	1778375		5/2007
GB	90075680920001		1/2020
JP	1101243		2/2001
JP	2002263262	A	9/2002
JP	1484230		10/2013
WO	2005094957	A1	10/2005

OTHER PUBLICATIONS

Flappy Bird arcade cabinet will empty your wallet in record time, Fingas, Jan. 10, 2015, retrieved from https://www.engadget.com/2015/01/10/flappy-bird-arcade-cabinet/.

World's Largest Pac-Man Game Overview, Bandai Namco, Jul. 11, 2016, retrieved from https://www.youtube.com/watch?time_continue-54&v=4GqS9TTecGc.

ICE Debuts Shell Game Addition To Price Is Right Redemption Lineup, Montano, Jun. 5, 2011, retrieved from https://www.vendingtimes.(X)m/articles/ice-debuts-shell-game-addition-to-price-is-right-r-8412?id=5FF3782D18934396BD83A14B3BD1E0BC.

SD Ped pro, Xtension, Sep. 28, 2014, retrieved from http://www.xtensiongaming.com/products/xtension-sit-down-pedestal-arcade-cabineet-for-fight-sticks/attachment/sd-ped-pro/.

Incredible Technologies Details Golden Tee LIVE 2012, Arcadehero, Aug. 25, 2011, retrieved from http://arcadeheroes.com/2011/08/25/incredible-technologies-details-golden-tee-live-2012/.

Novomatic to showcase latest products at Peru Gaming Show, Jun. 2, 2016, retrieved from http://www.Innovategaming.com/c63114.

Introductie Fazi Roulette, Elam Group, Jun. 10, 2018, retrieved from https://www.youtube.com/watch?v=RLrFI5QDT5U.

Office Action dated Mar. 25, 2020, for U.S. Appl. No. 29/658,892 (pp. 1-10).

Office Action dated Sep. 18, 2020 for U.S. Appl. No. 29/658,892 (pp. 1-5).

Notice of Allowance dated Dec. 31, 2020 for U.S. Appl. No. 29/658,892 (pp. 1-5).

Notice of Allowance dated Jul. 8, 2021 for U.S. Appl. No. 29/768,121 (pp. 1-10).

Office Action dated Apr. 29, 2021 for U.S. Appl. No. 16/867,290 (pp. 1-12).

Notice of Allowance dated Aug. 5, 2021 for U.S. Appl. No. 16/867,290 (pp. 1-7).

Notice of Allowance dated Nov. 1, 2021 for U.S. Appl. No. 16/867,290 (pp. 1-7).

Office Action dated Jan. 7, 2022 for U.S. Appl. No. 29/696,682 (pp. 1-8).

Office Action dated Apr. 18, 2022 for U.S. Appl. No. 29/696,682 (pp. 1-6).

Notice of Allowance dated Oct. 26, 2022 for U.S. Appl. No. 29/696,682 (pp. 1-5).

Office Action (Non-Final Rejection) dated Jun. 22, 2022 for U.S. Appl. No. 17/384,199 (pp. 1-9).

Office Action dated Aug. 4, 2022 for U.S. Appl. No. 29/708,718 (pp. 1-5).

Office Action dated Aug. 04. 2022 for U.S. Appl. No. 29/716,520 (pp. 1-6).

Office Action (Notice of Allowance and Fees Due (PTOL-85)) dated Dec. 7, 2022 for U.S. Appl. No. 17/384,199 (pp. 1-7).
Notice of Allowance dated Jan. 13, 2023 for U.S. Appl. No. 29/708,718 (pp. 1-7).
Office Action (Non-Final Rejection) dated Jul. 26, 2023 for U.S. Appl. No. 17/529,102 (pp. 1-6).
Office Action (Notice of Allowance and Fees Due (PTOL-85)) dated Aug. 4, 2023 for U.S. Appl. No. 17/865,016 (pp. 1-7).
Office Action dated Aug. 9, 2023 for U.S. Appl. No. 29/775,222 (pp. 1-10).
Office Action (Non-Final Rejection) dated Sep. 8, 2023 for U.S. Appl. No. 17/389,076 (pp. 1-5).
Office Action dated Oct. 17, 2023 for U.S. Appl. No. 18/168,361 (pp. 1-9).
Office Action (Non-Final Rejection) dated Oct. 17, 2023 for U.S. Appl. No. 18/168,361 (pp. 1-8).
Notice of Allowance dated Nov. 13, 2023 for U.S. Appl. No. 29/775,222 (pp. 1-7).
Office Action (Notice of Allowance and Fees Due (PTOL-85)) dated Nov. 16, 2023 for U.S. Appl. No. 17/529,102 (pp. 1-5).
Office Action (Notice of Allowance and Fees Due (PTOL-85)) dated Dec. 28, 2023 for U.S. Appl. No. 17/384,323 (pp. 1-10).
Office Action dated Jan. 18, 2024 for U.S. Appl. No. 29/774,758 (pp. 1-7).
Frank Floor Talk: Big and bad—The latest large-format styles by manufacturer [online], [site visited Jan. 12, 2023]. Available from internet, URL: :<https://cdcgaming.com/frank-floor-talk-big-and-bad-the-latest-large-format-styles-by-manufacturer/>(Year: 2022).
Office Action (Notice of Allowance and Fees Due (PTOL-85)) dated Jan. 31, 2024 for U.S. Appl. No. 17/529,102 (pp. 1-5).
Office Action (Notice of Allowance and Fees Due (PTOL-85)) dated Feb. 22, 2024 for U.S. Appl. No. 17/389,076 (pp. 1-8).
Office Action (Non-Final Rejection) dated Mar. 14, 2024 for U.S. Appl. No. 17/384,318 (pp. 1-15).
Office Action dated Mar. 27, 2024 for U.S. Appl. No. 18/168,361 (pp. 1-13).
Notice of Allowance dated Apr. 19, 2024 for U.S. Appl. No. 29/774,758 (pp. 1-7).

* cited by examiner

Primary Examiner — Mehri F Bajoul
(74) *Attorney, Agent, or Firm* — Armstrong Teasdale LLP

(57) **CLAIM**

The ornamental design for a gaming machine, as shown and described.

DESCRIPTION

FIG. **1** is a front perspective view of a gaming machine showing our new design according to a first embodiment;
FIG. **2** is a front elevation view thereof;
FIG. **3** is a rear elevation view thereof;
FIG. **4** is a right side elevation view thereof;
FIG. **5** is a left side elevation view thereof;
FIG. **6** is a top plan view thereof;
FIG. **7** is a bottom plan view thereof;
FIG. **8** is a rear perspective view thereof;
FIG. **9** is a front perspective view of a gaming machine showing our new design according to a second embodiment;
FIG. **10** is a front elevation view thereof;
FIG. **11** is a rear elevation view thereof;
FIG. **12** is a right side elevation view thereof;
FIG. **13** is a left side elevation view thereof;
FIG. **14** is a top plan view thereof;
FIG. **15** is a bottom plan view thereof; and,
FIG. **16** is a rear perspective view thereof.
The evenly dashed broken lines in the drawings illustrate portions of the gaming machine that form no part of the claimed design. The dot-dash broken lines in the drawings illustrate a boundary line that forms no part of the claimed design.

1 Claim, 16 Drawing Sheets

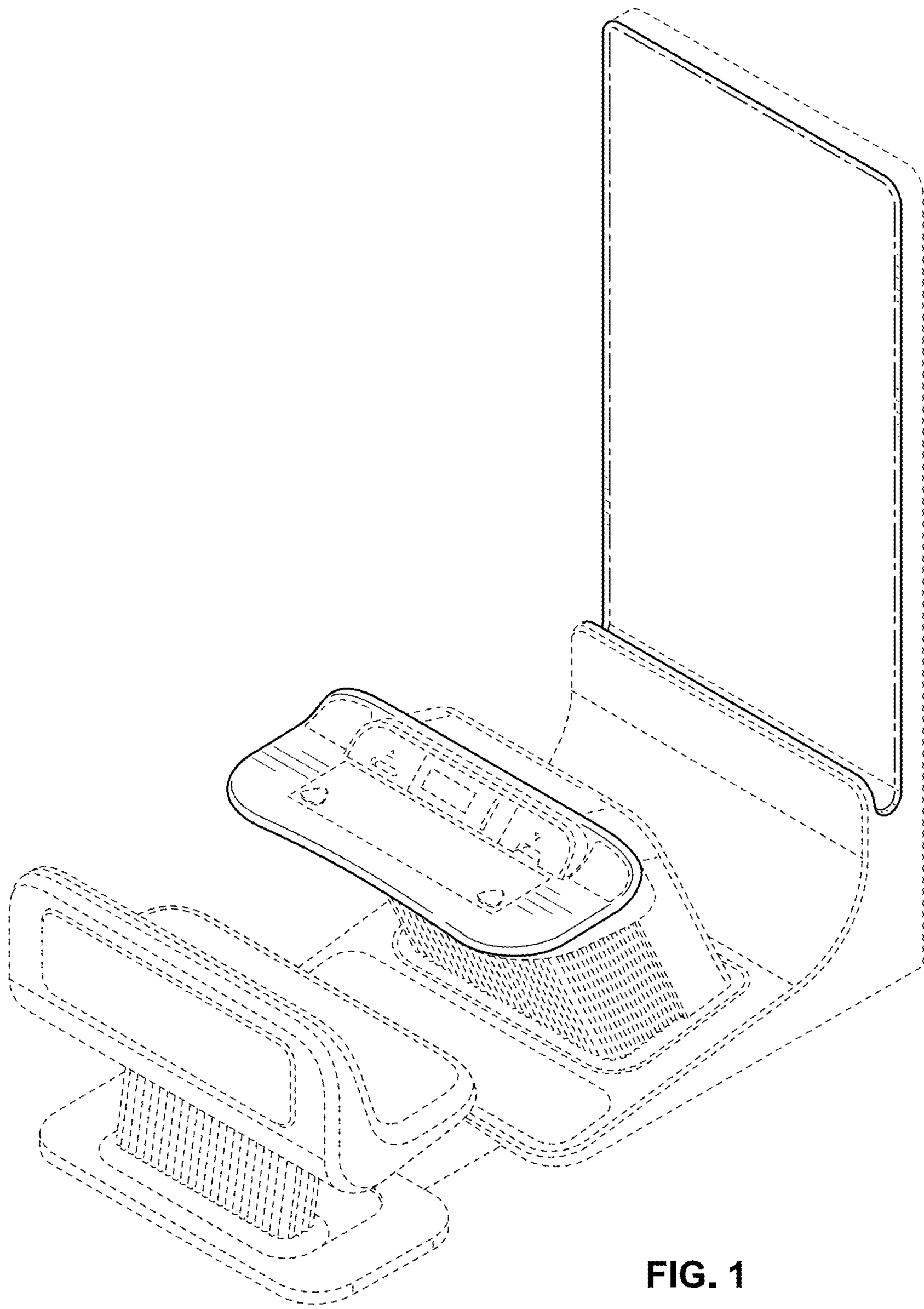

FIG. 1

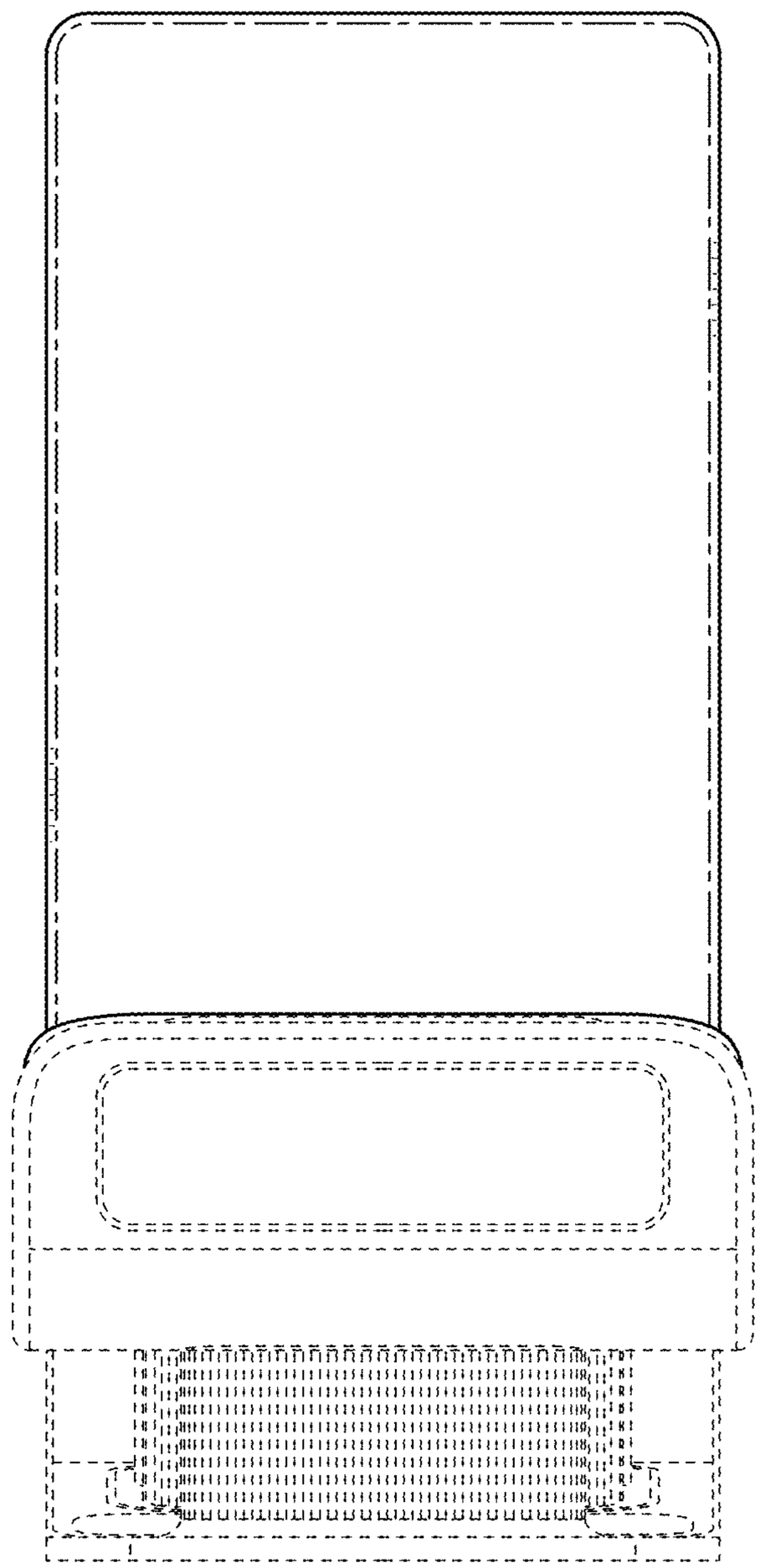

FIG. 2

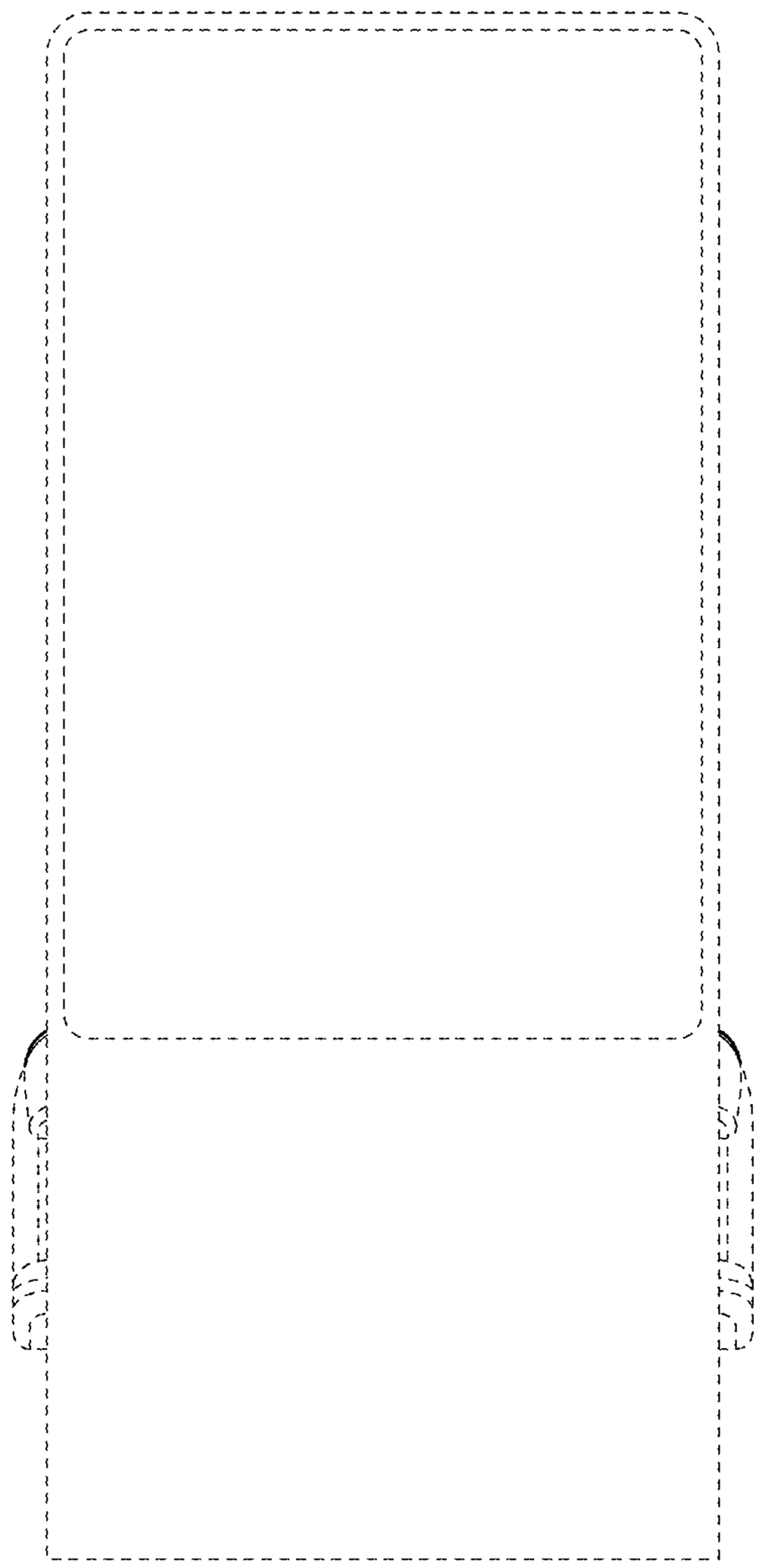

FIG. 3

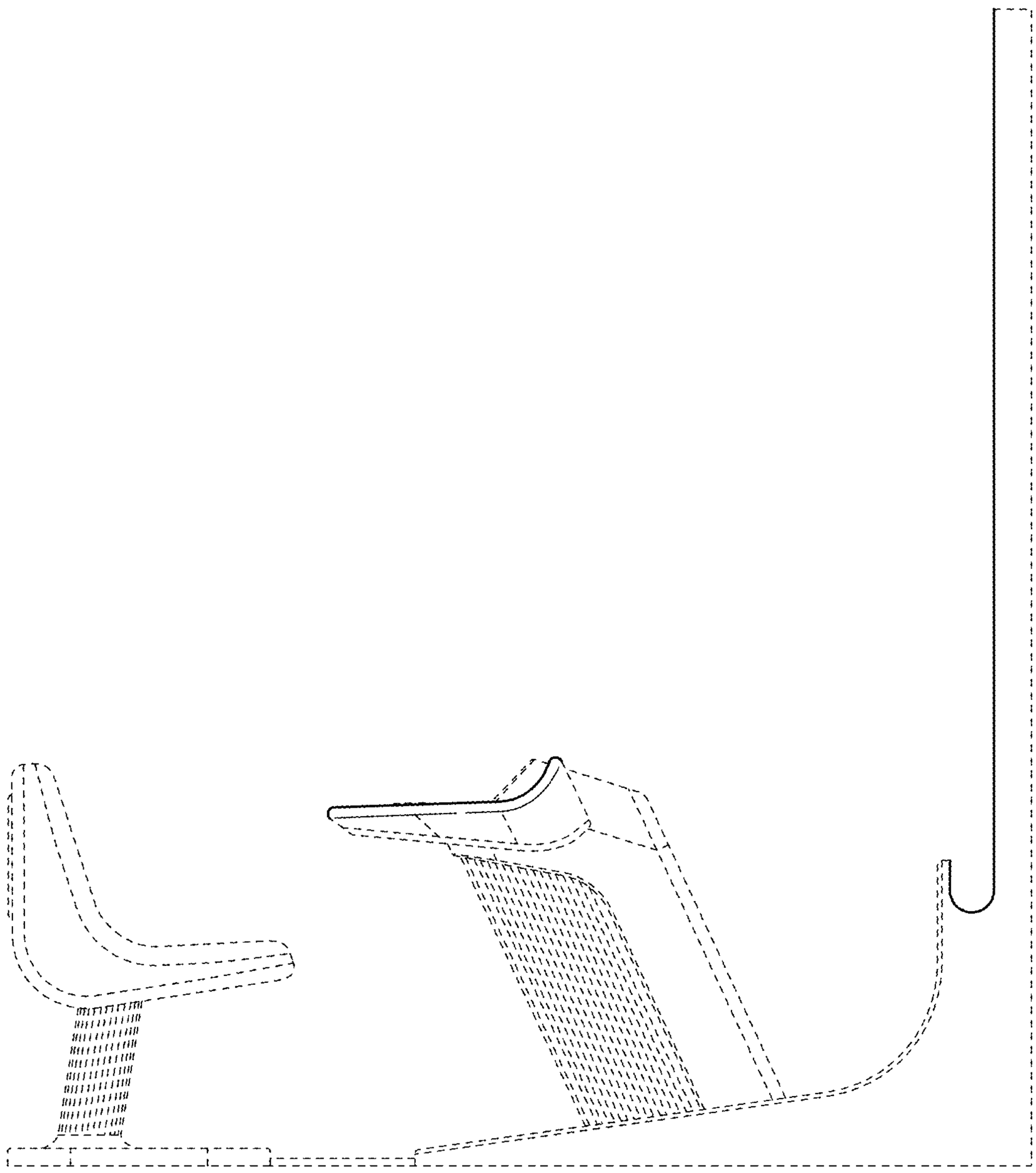

FIG. 4

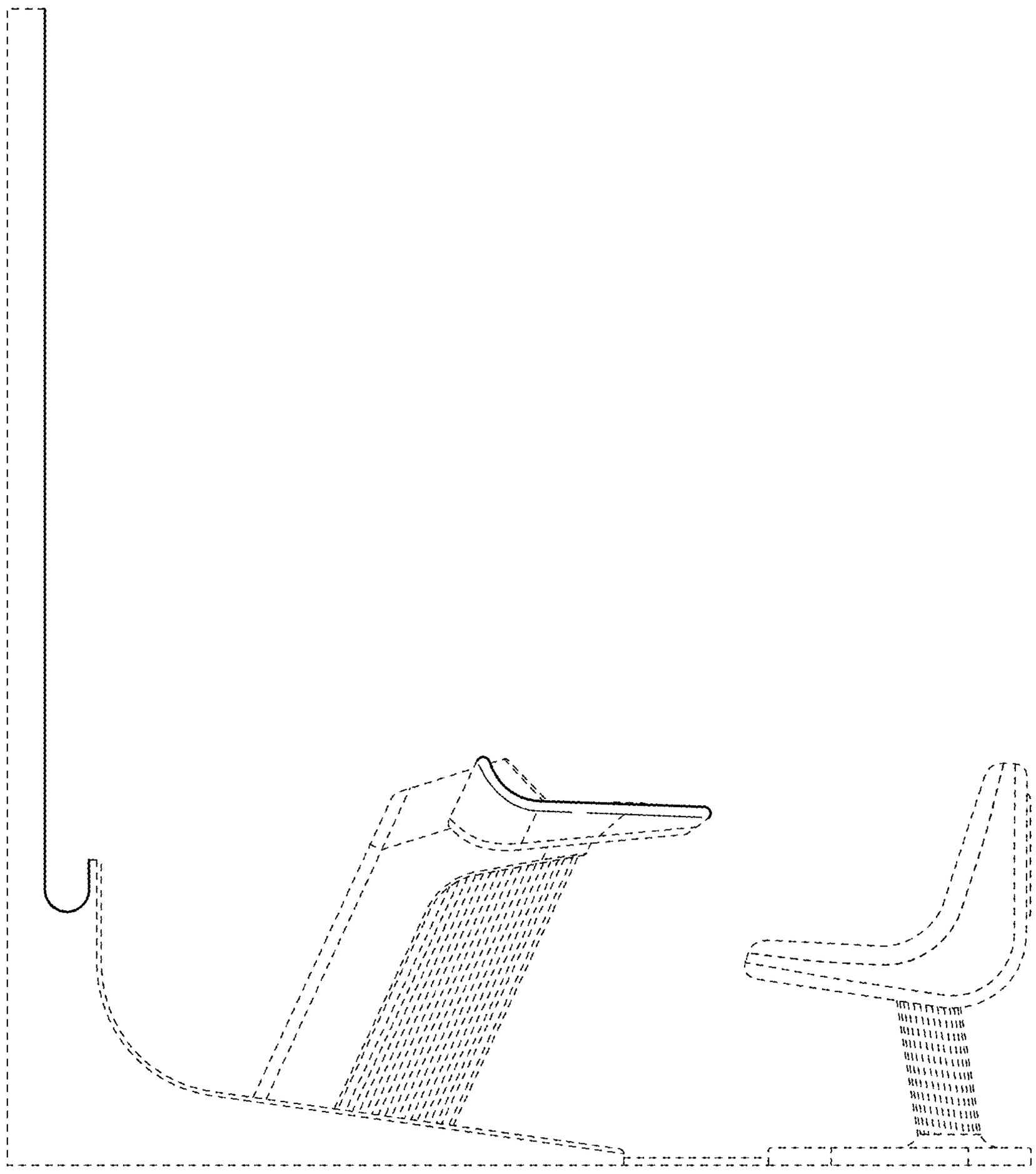

FIG. 5

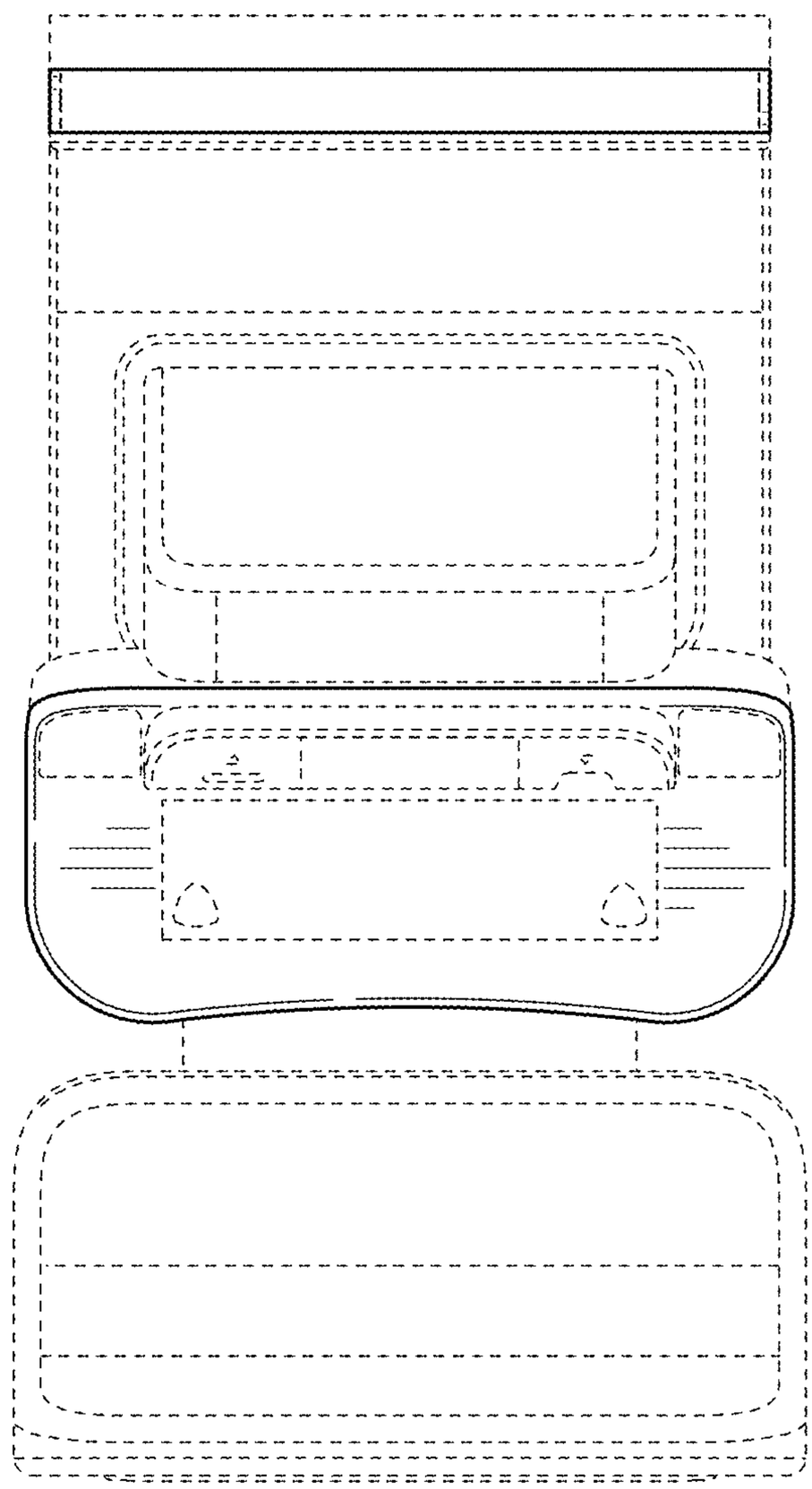

FIG. 6

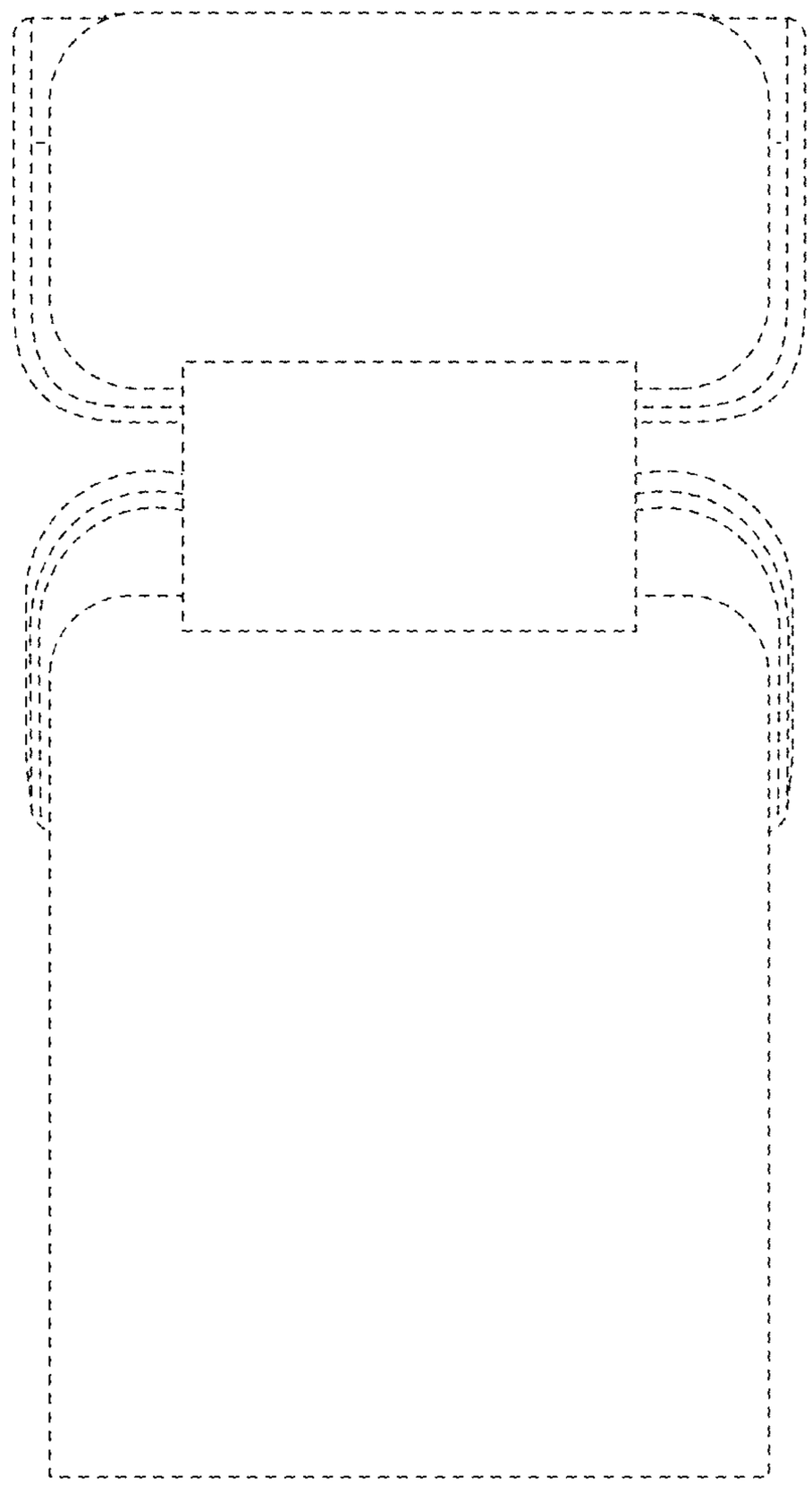

FIG. 7

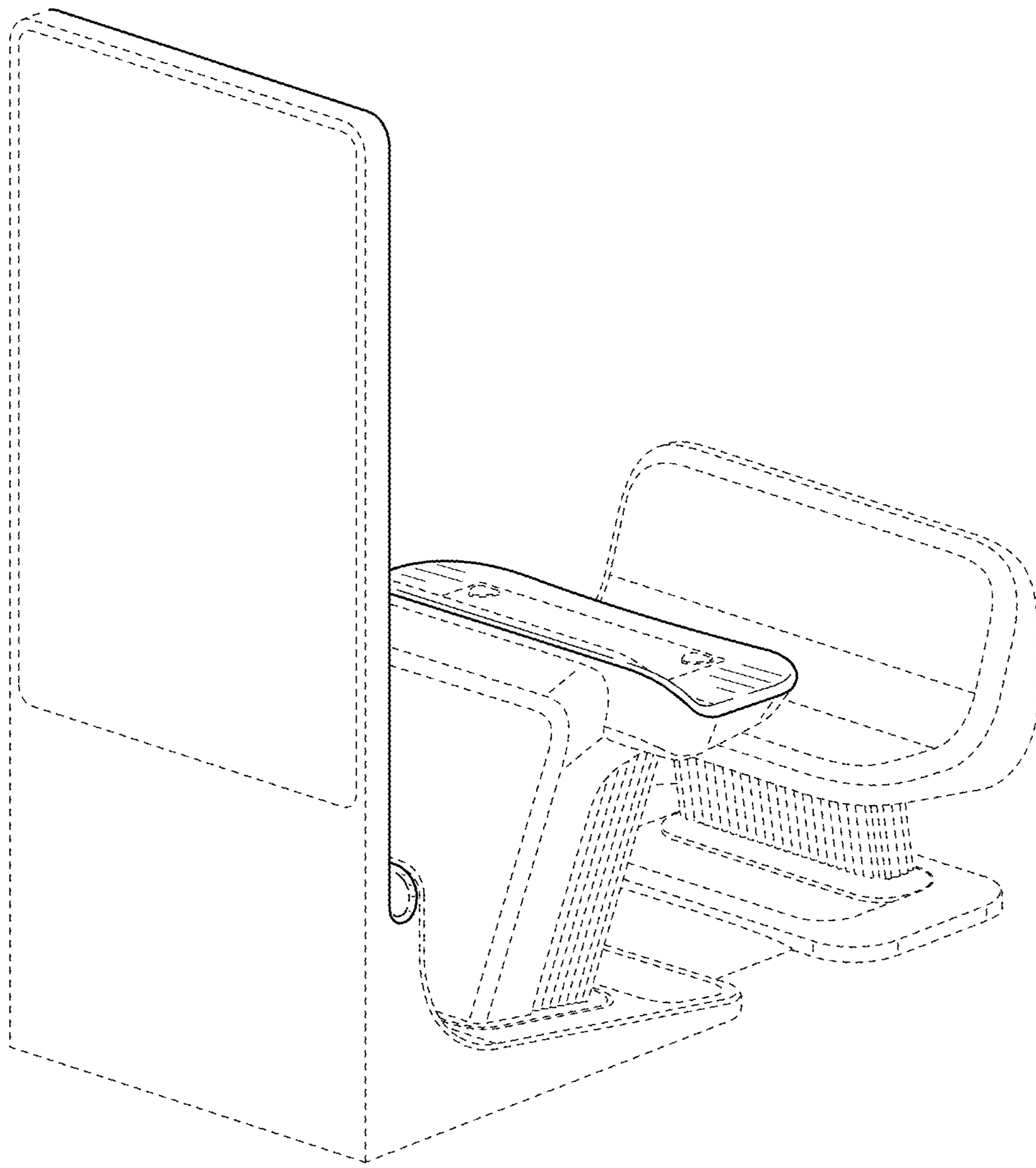

FIG. 8

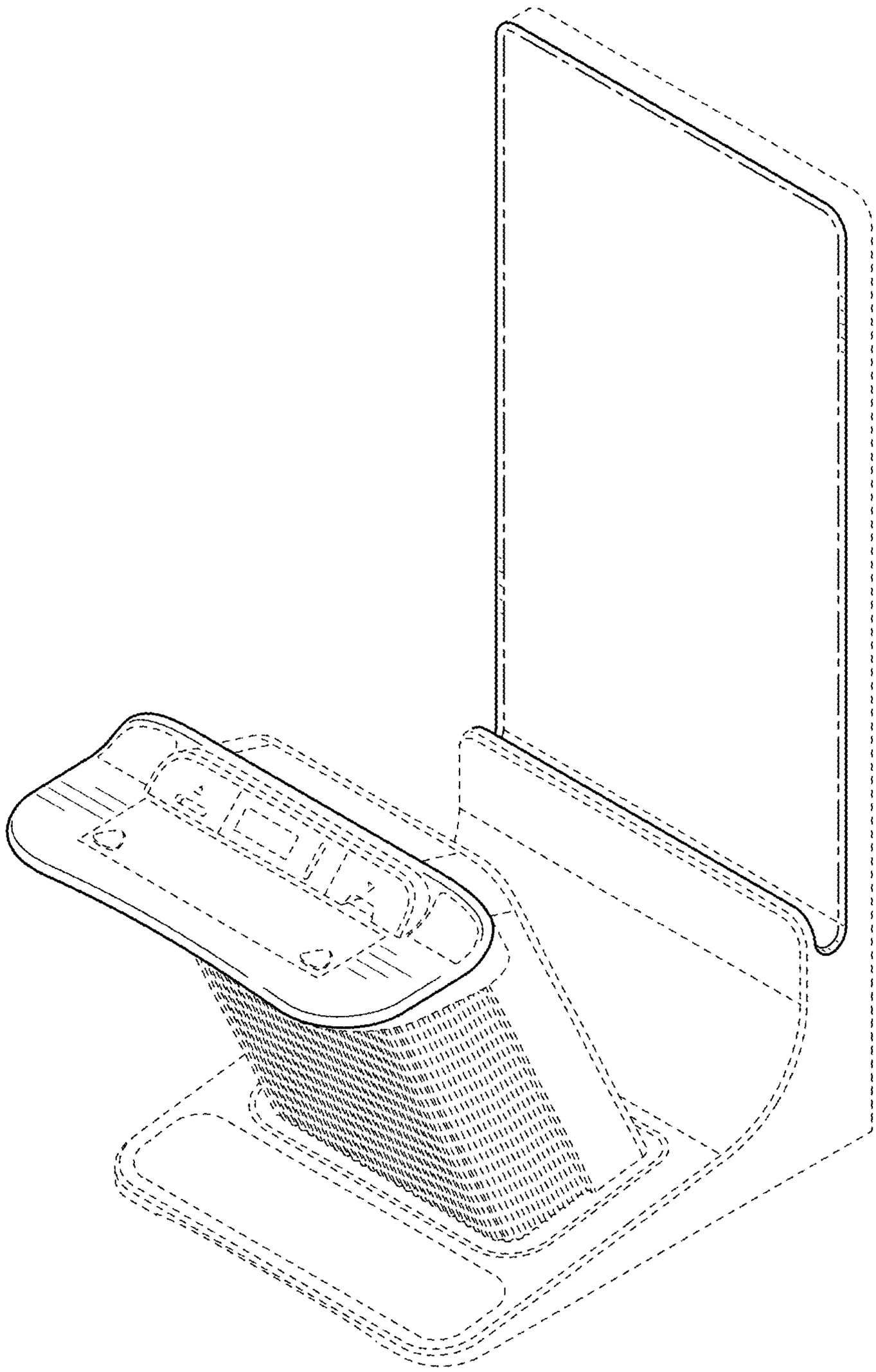

FIG. 9

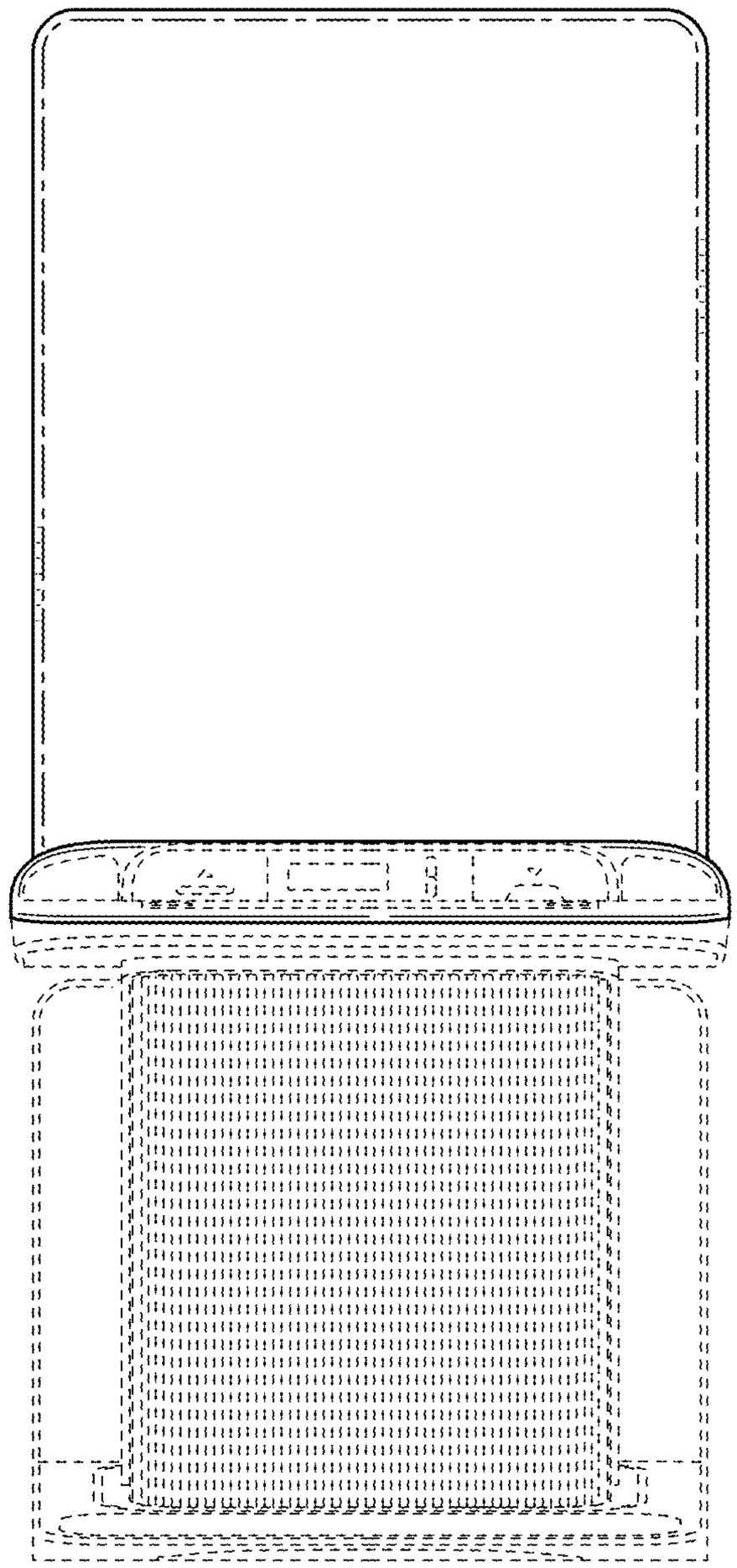

FIG. 10

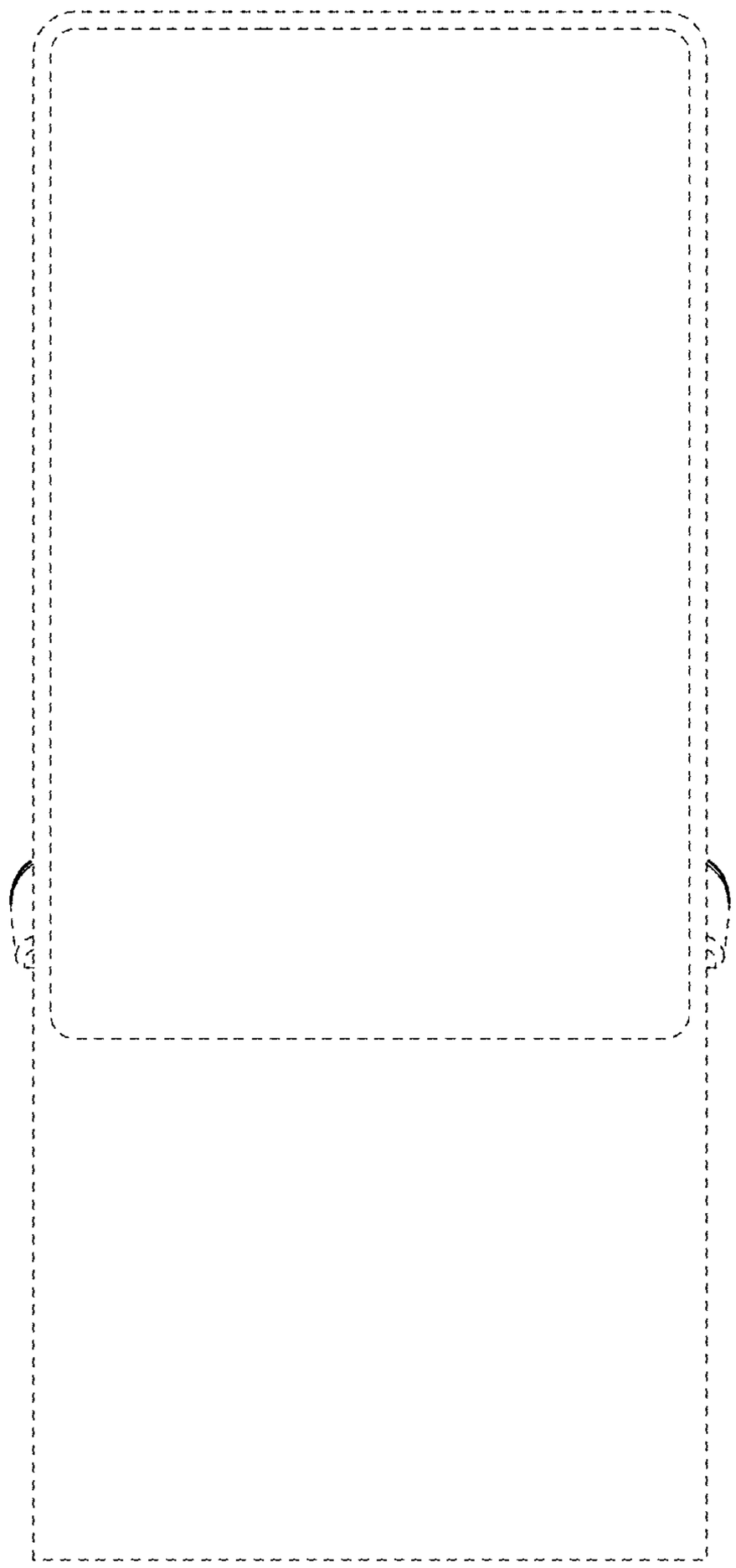

FIG. 11

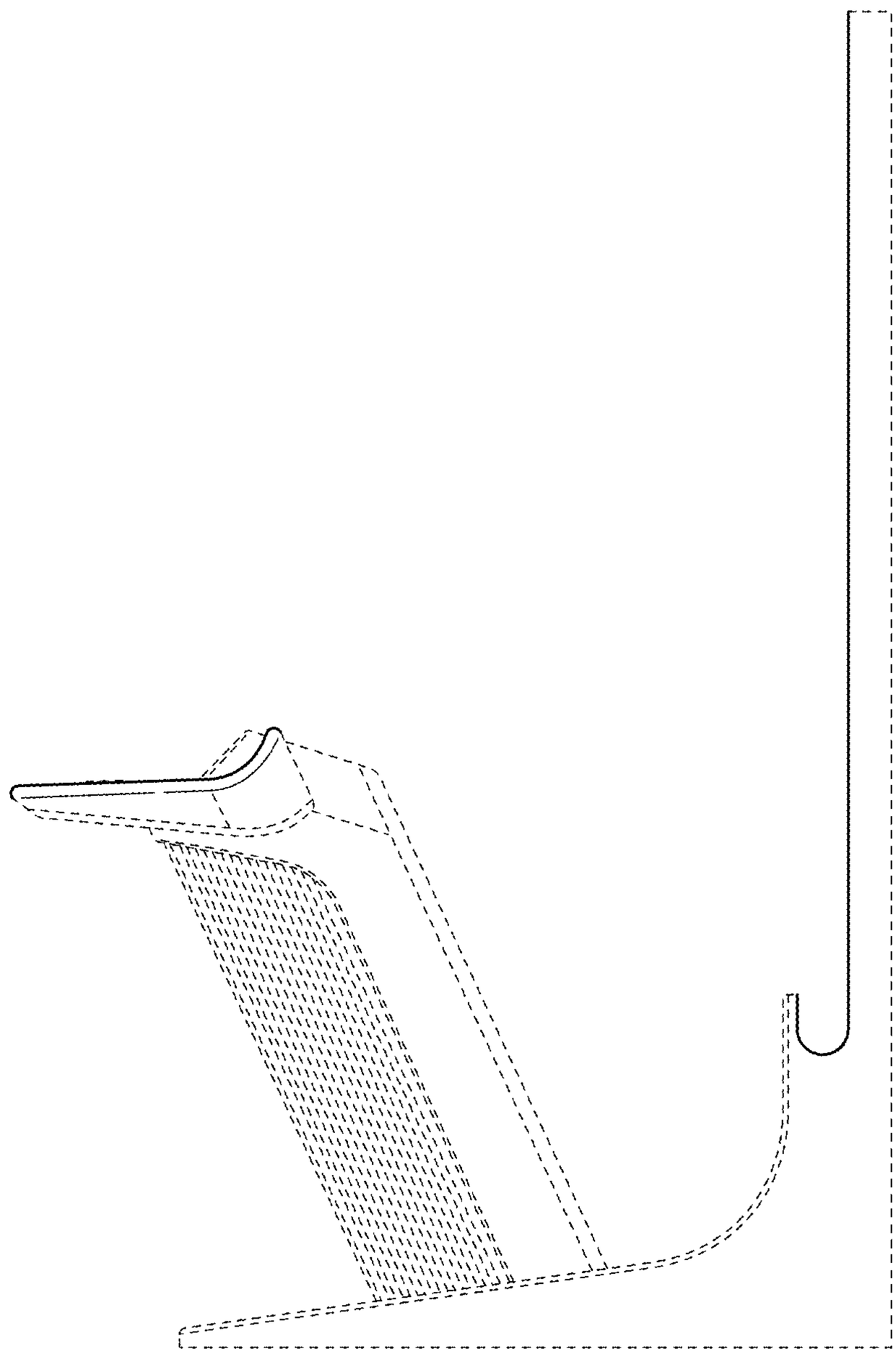

FIG. 12

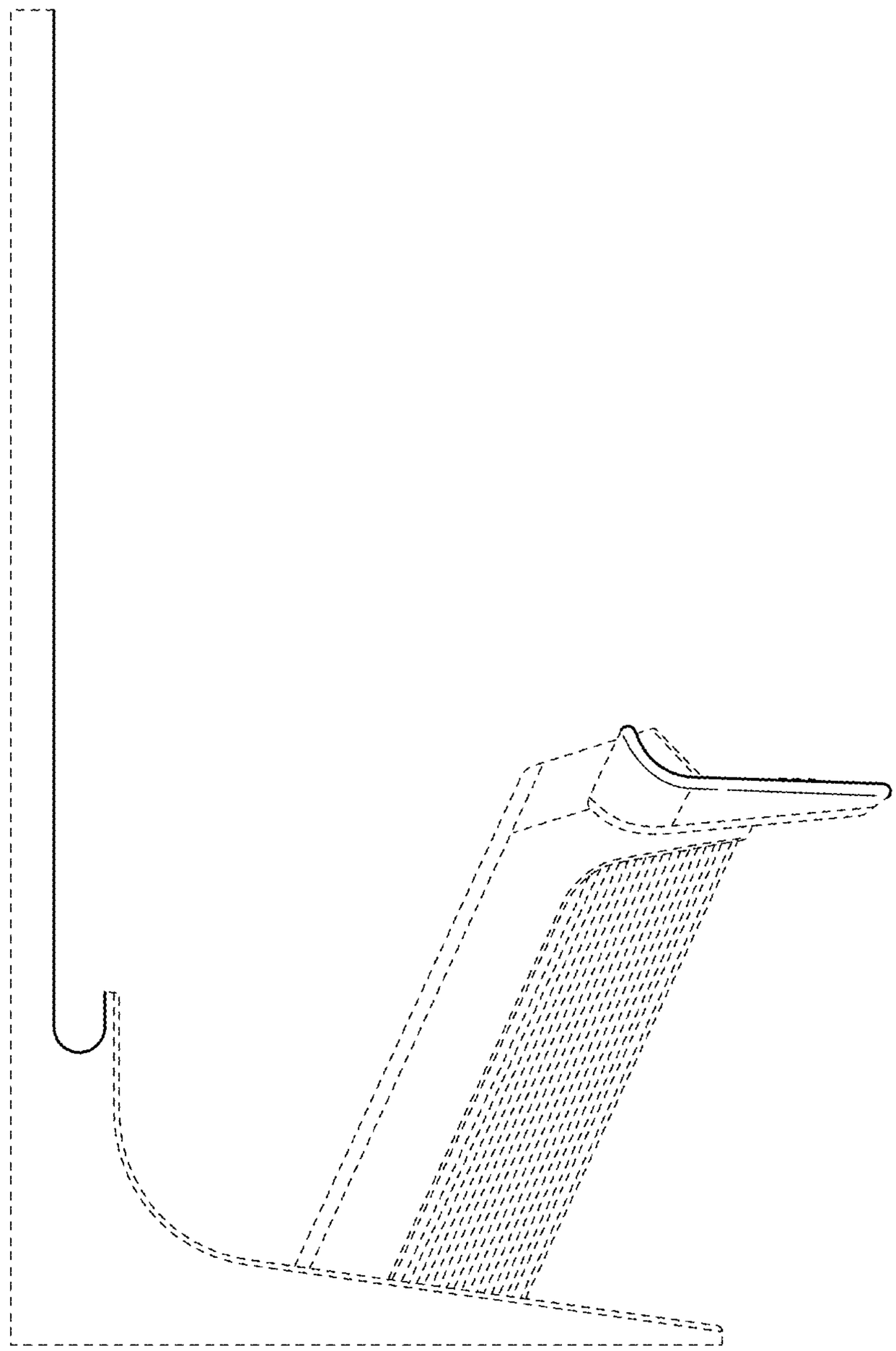

FIG. 13

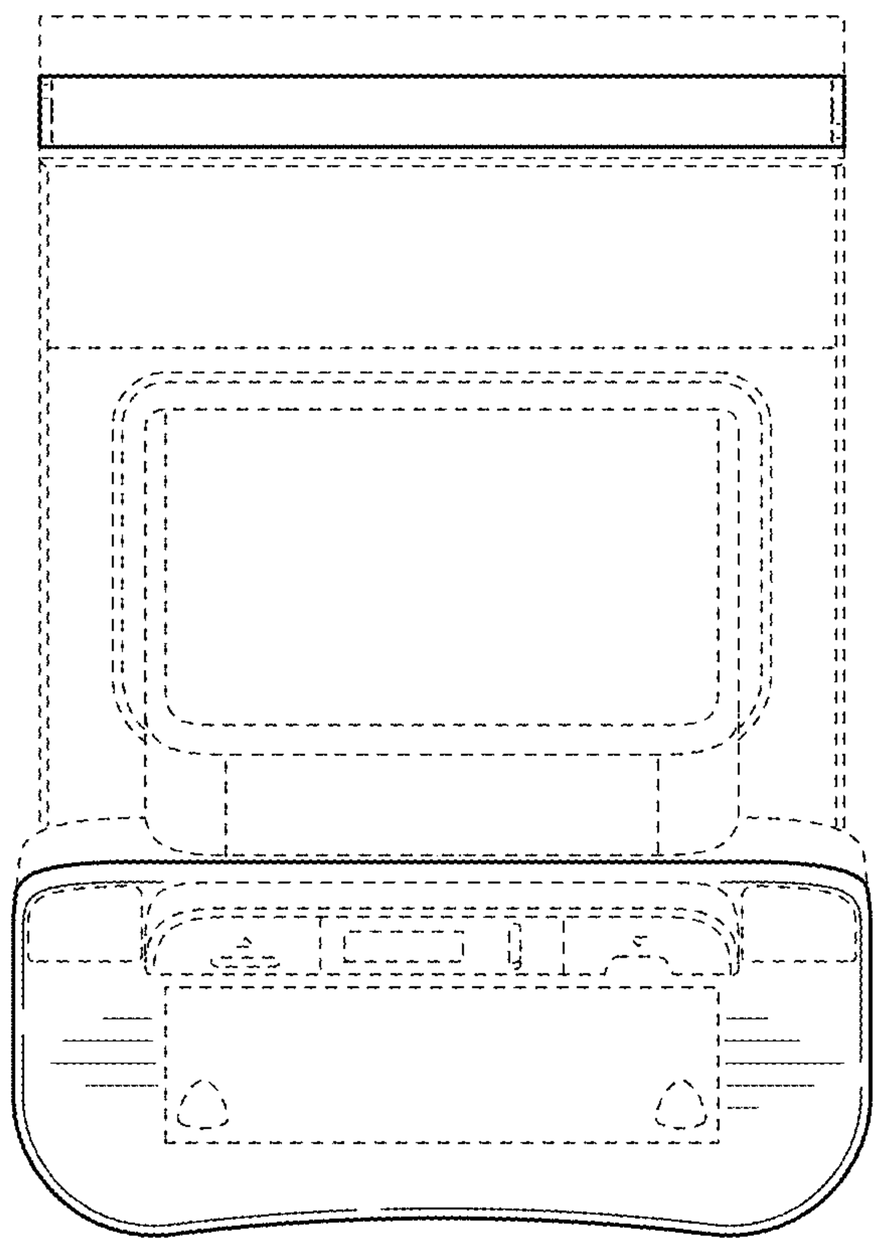

FIG. 14

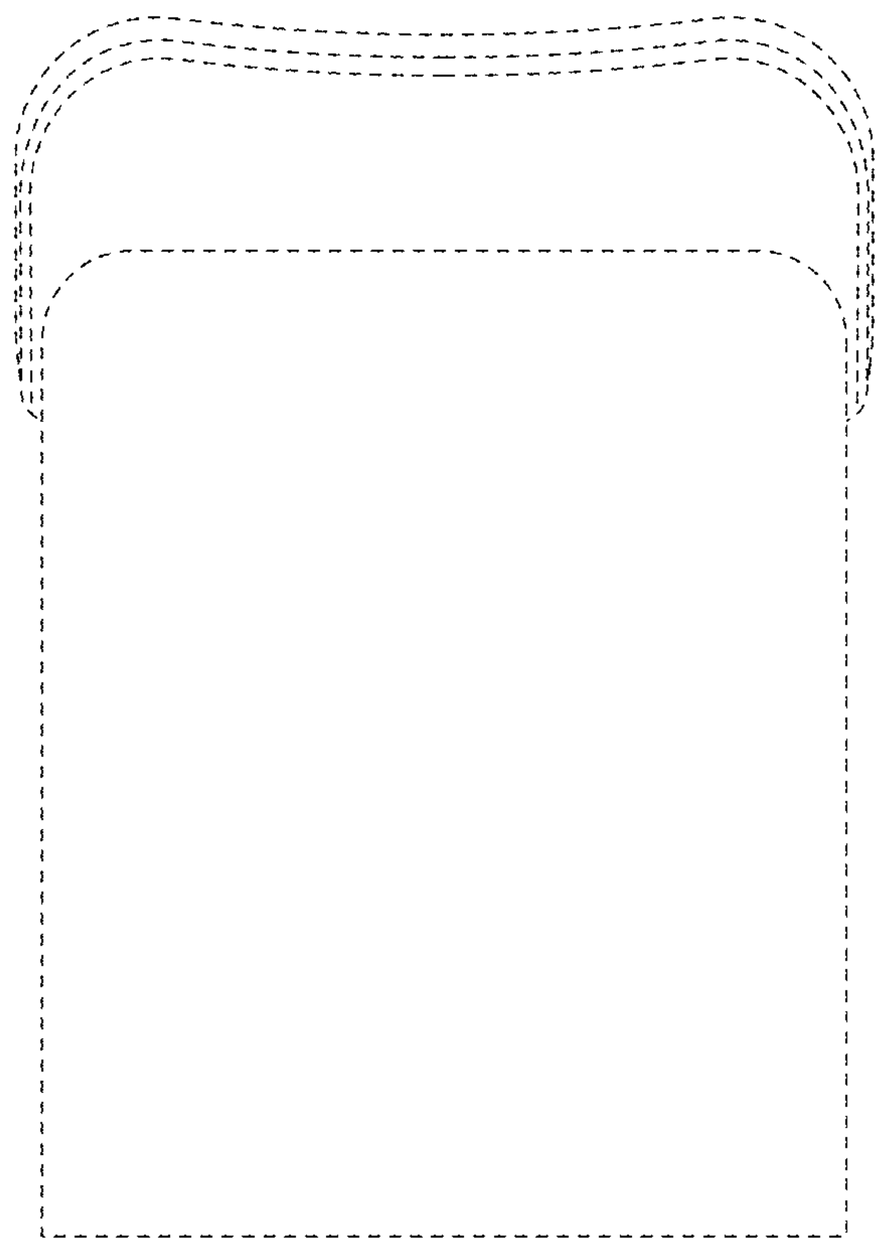

FIG. 15

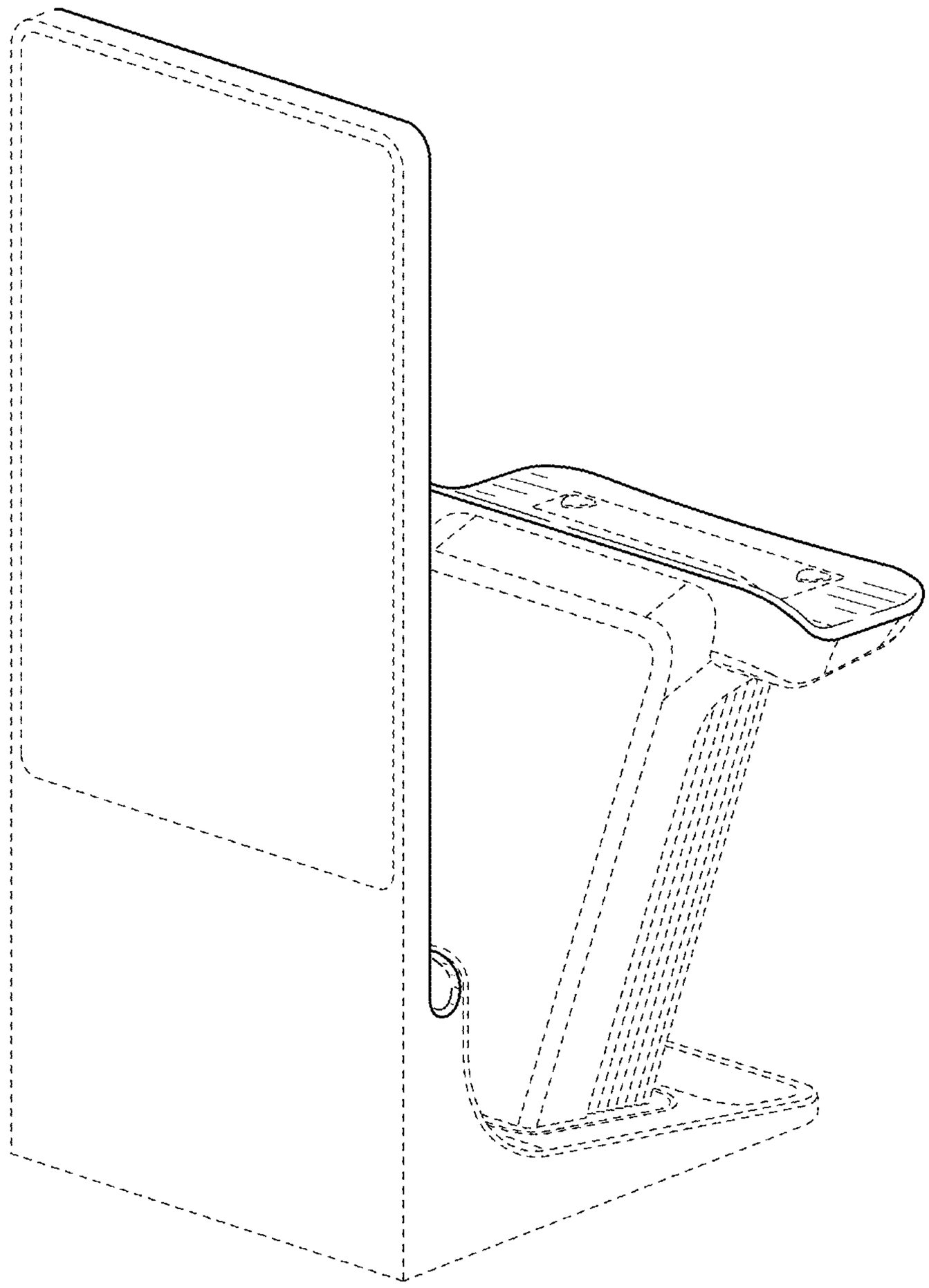

FIG. 16