US0D1069578S

(12) United States Design Patent

Bertani et al.

(10) Patent No.: US D1,069,578 S
(45) Date of Patent: ** Apr. 8, 2025

(54) **LID FOR CONTAINERS**

(71) Applicant: **TETRA LAVAL HOLDINGS & FINANCE S.A.**, Pully (CH)

(72) Inventors: **Giulio Bertani**, Modena (IT); **Pietro Martini**, Modena (IT); **Daniele Golfieri**, Modena (IT); **Erica Lundström**, Lund (SE); **Kristian Jacobsson**, Lund (SE); **Francesca Tavoni**, Modena (IT); **Linda Luik**, Lund (SE); **Maurizio Filippini**, Modena (IT)

(73) Assignee: **TETRA LAVAL HOLDINGS & FINANCE S.A.**, Pully (CH)

(**) Term: **15 Years**

(21) Appl. No.: **35/519,974**

(22) Filed: **Feb. 7, 2023**

(80) **Hague Agreement Data**

Int. Filing Date: **Feb. 7, 2023**
Int. Reg. No.: **DM/227265**
Int. Reg. Date: **Feb. 7, 2023**
Int. Reg. Pub. Date: **Feb. 9, 2024**

(30) **Foreign Application Priority Data**

Aug. 8, 2022 (EM) 009143001-0001
Aug. 8, 2022 (EM) 009143001-0002
(Continued)

(51) **LOC (15) Cl.** **09-06**
(52) **U.S. Cl.**
USPC **D9/446**
(58) **Field of Classification Search**
USPC D7/392.1, 396.2; D9/434–436, 443, 444, D9/446, 447, 452, 453, 499
(Continued)

(56) **References Cited**

U.S. PATENT DOCUMENTS

D110,817 S * 8/1938 McQuinn D9/443
D112,289 S * 11/1938 McQuinn D9/443
(Continued)

OTHER PUBLICATIONS

Reddit. This milk has a flip top instead of a twist off top. 2019. https://www.reddit.com/r/mildlyinteresting/comments/bcimyl/this_milk_has_a_flip_top_instead_of_a_twist_off/ (Year: 2019).*
(Continued)

Primary Examiner — Darcey E Gottschalk
(74) *Attorney, Agent, or Firm* — Leason Ellis LLP

(57) **CLAIM**

The ornamental design for a lid for containers as shown and described.

DESCRIPTION

2. Lid for containers
4. Lid for containers
2.1 : Perspective
2.2 : Right side view
2.3: Left side view
2.4: Front
2.5: Back
2.6: Top
2.7: Bottom
4.1 : Perspective
4.2 : Right side view
4.3 : Left side view
4.4: Front
4.5: Back
4.6: Top
4.7: Bottom

In the drawings, the broken lines depict portions of a lid for containers that form no part of the claimed design.

1 Claim, 14 Drawing Sheets

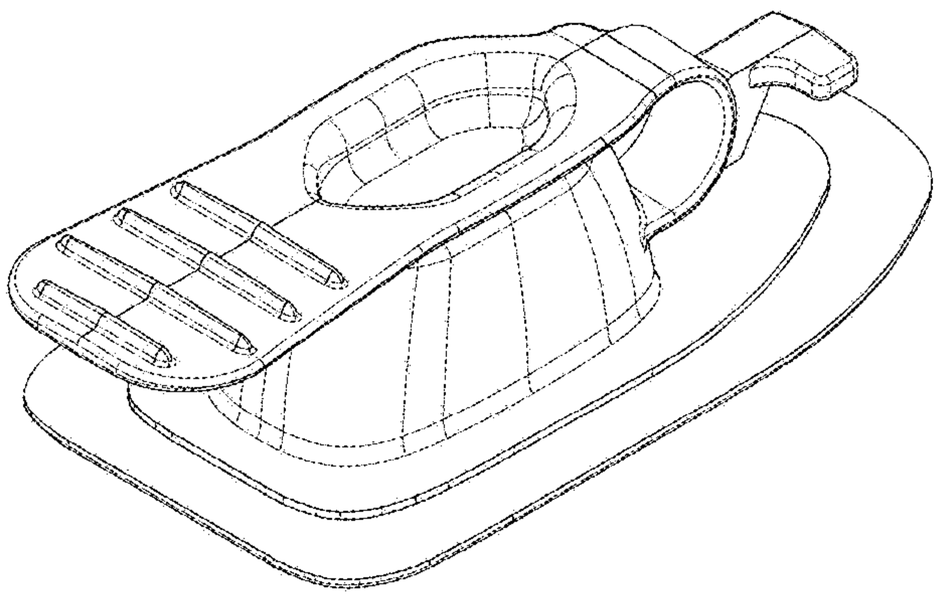

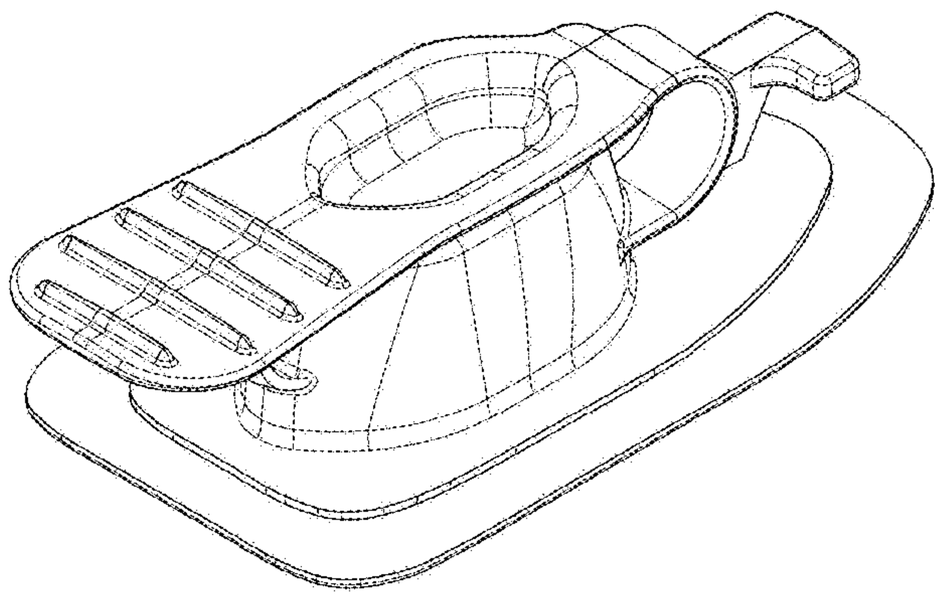

(30) **Foreign Application Priority Data**

Aug. 8, 2022 (EM) 009143001-0003
Aug. 8, 2022 (EM) 009143001-0004

(58) **Field of Classification Search**
CPC B65D 47/141; B65D 47/746; B65D 43/0272; B65D 5/06; B65D 5/44; B65D 5/56
See application file for complete search history.

(56) **References Cited**

U.S. PATENT DOCUMENTS

D174,205	S	*	3/1955	Ward	D9/446
D190,303	S	*	5/1961	Conklin	D9/443
D197,926	S	*	4/1964	Stull	D9/446
3,390,816	A	*	7/1968	Mojonnier	B65D 11/08 222/153.07
D288,667	S	*	3/1987	Miner	D9/453
D364,810	S	*	12/1995	Meisner	D9/446
6,402,019	B1	*	6/2002	Casale	B65B 61/186 53/329.2
D537,716	S	*	3/2007	Smith	D9/449
D672,241	S	*	12/2012	Sawicki	D9/449
8,695,830	B2	*	4/2014	Meyers	B65D 47/0895 D9/449
9,309,041	B2	*	4/2016	Mabee	B65D 47/0814
9,327,862	B2	*	5/2016	Barbieri	B65D 5/0209
D980,066	S	*	3/2023	Filippini	D9/443
D981,230	S	*	3/2023	Filippini	D9/435
11,753,204	B2	*	9/2023	Sorbara	B65D 5/563 222/556
D1,007,306	S	*	12/2023	Martini	D9/446
D1,011,189	S	*	1/2024	Martini	D9/446
12,091,215	B2	*	9/2024	Palladino	B65D 5/746
D1,047,691	S	*	10/2024	van den Hoonaard	D9/446
12,145,767	B2	*	11/2024	Martini	B65D 5/749
2017/0361977	A1	*	12/2017	Palladino	B65D 5/708
2020/0377255	A1	*	12/2020	Luik	B65D 5/064
2021/0188479	A1	*	6/2021	Sorbara	B65D 5/746
2022/0089343	A1	*	3/2022	Zanotti	B65D 53/00
2022/0185552	A1	*	6/2022	Corradi	B65D 41/485
2023/0182953	A1	*	6/2023	Palladino	B29C 45/14 220/268
2023/0182964	A1	*	6/2023	Palladino	B65D 47/141 222/528
2023/0182971	A1	*	6/2023	Filippini	B65D 47/141 222/556
2023/0182972	A1	*	6/2023	Filippini	B65D 43/0272 220/268
2023/0406578	A1	*	12/2023	Filippini	B65D 41/46
2024/0158128	A1	*	5/2024	Martini	B65D 5/064

OTHER PUBLICATIONS

Dairy Industries. Tetra Pak partners with beverage brands to launch tethered caps on carton packages. Apr. 27, 2022. https://www.dairyindustries.com/news/40167/tetra-pak-partners-with-beverage-brands-to-launch-tethered-caps-on-carton-packages/ (Year: 2022).*
Autodesk Instructables. Folding a Tetra-pak, the Fun Way by rolfy Dec. 2013. https://www.instructables.com/Folding-a-Tetra-pak-the-Fun-Way/ (Year: 2013).*

* cited by examiner

FIG. 2.1

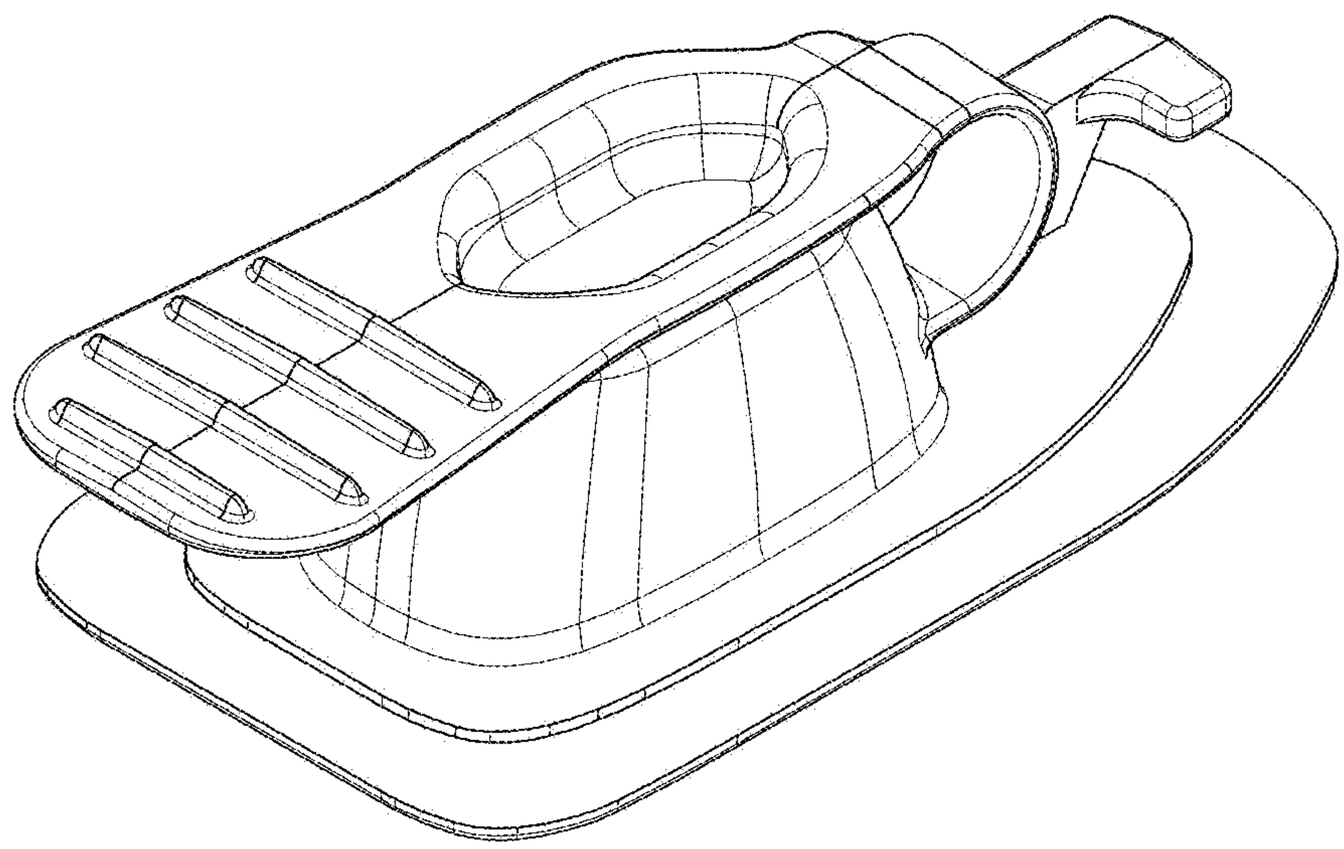

2.2

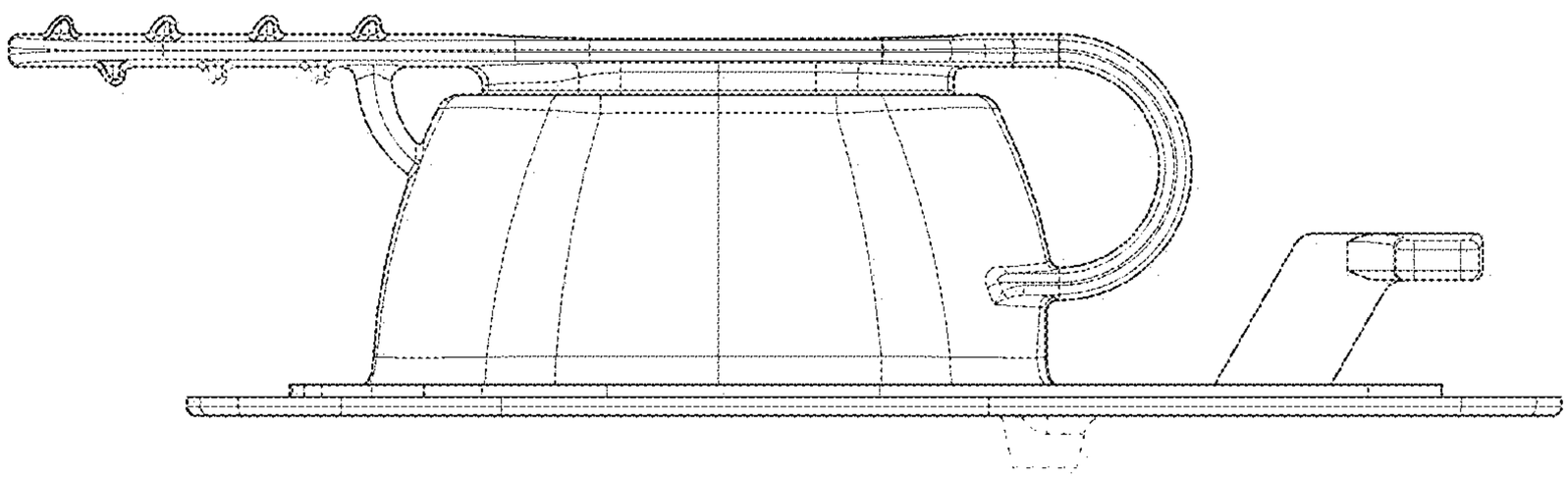

2.3

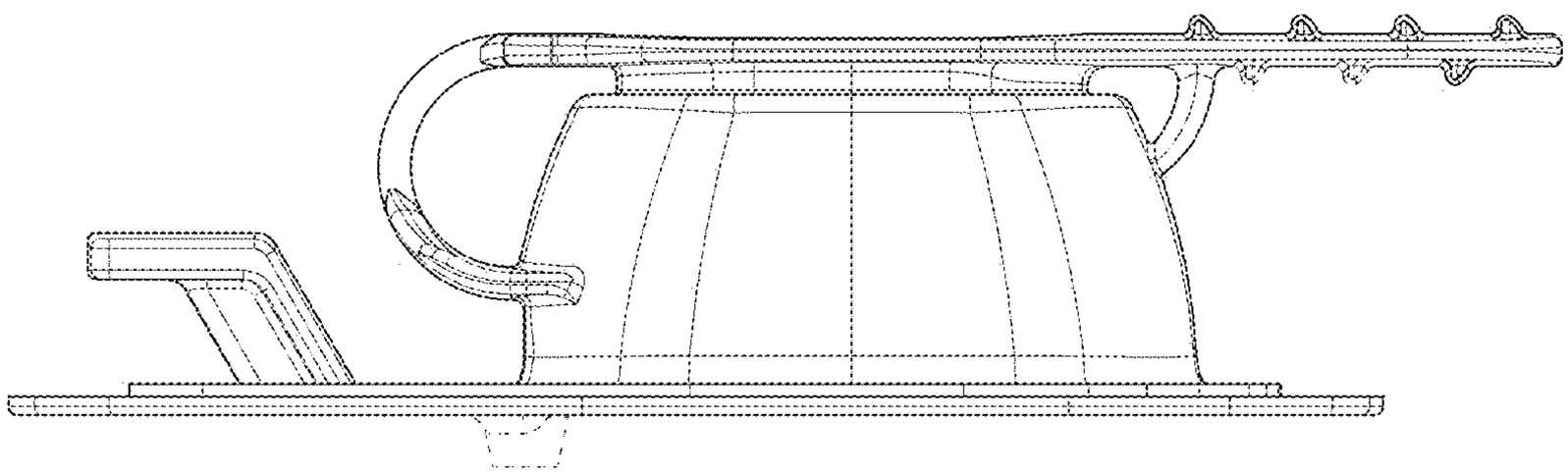

2.4

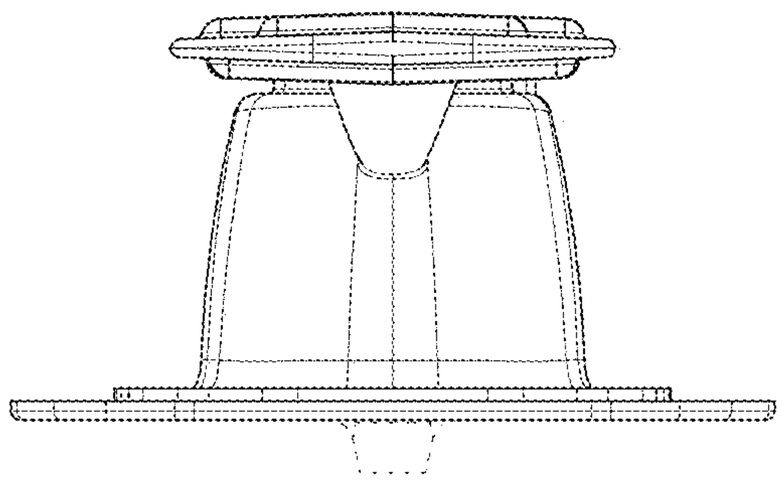

2.5

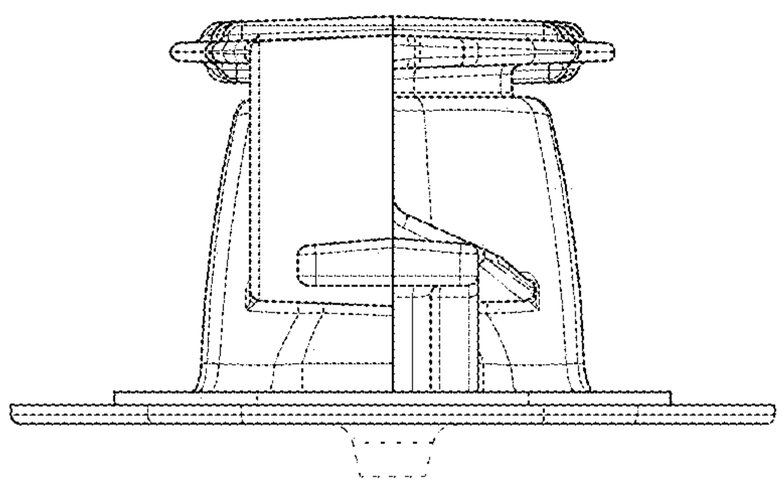

FIG. 2.6

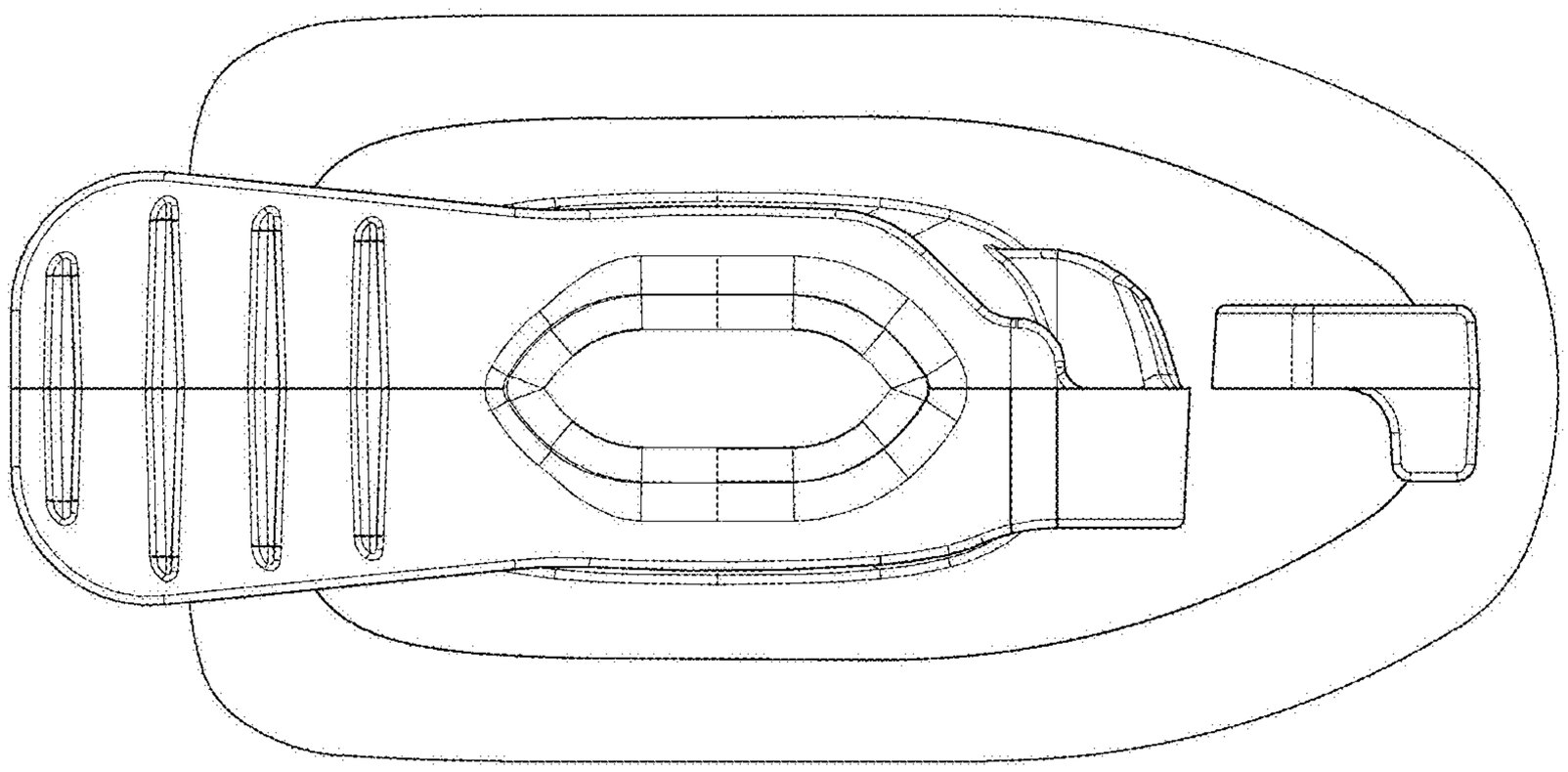

2.7

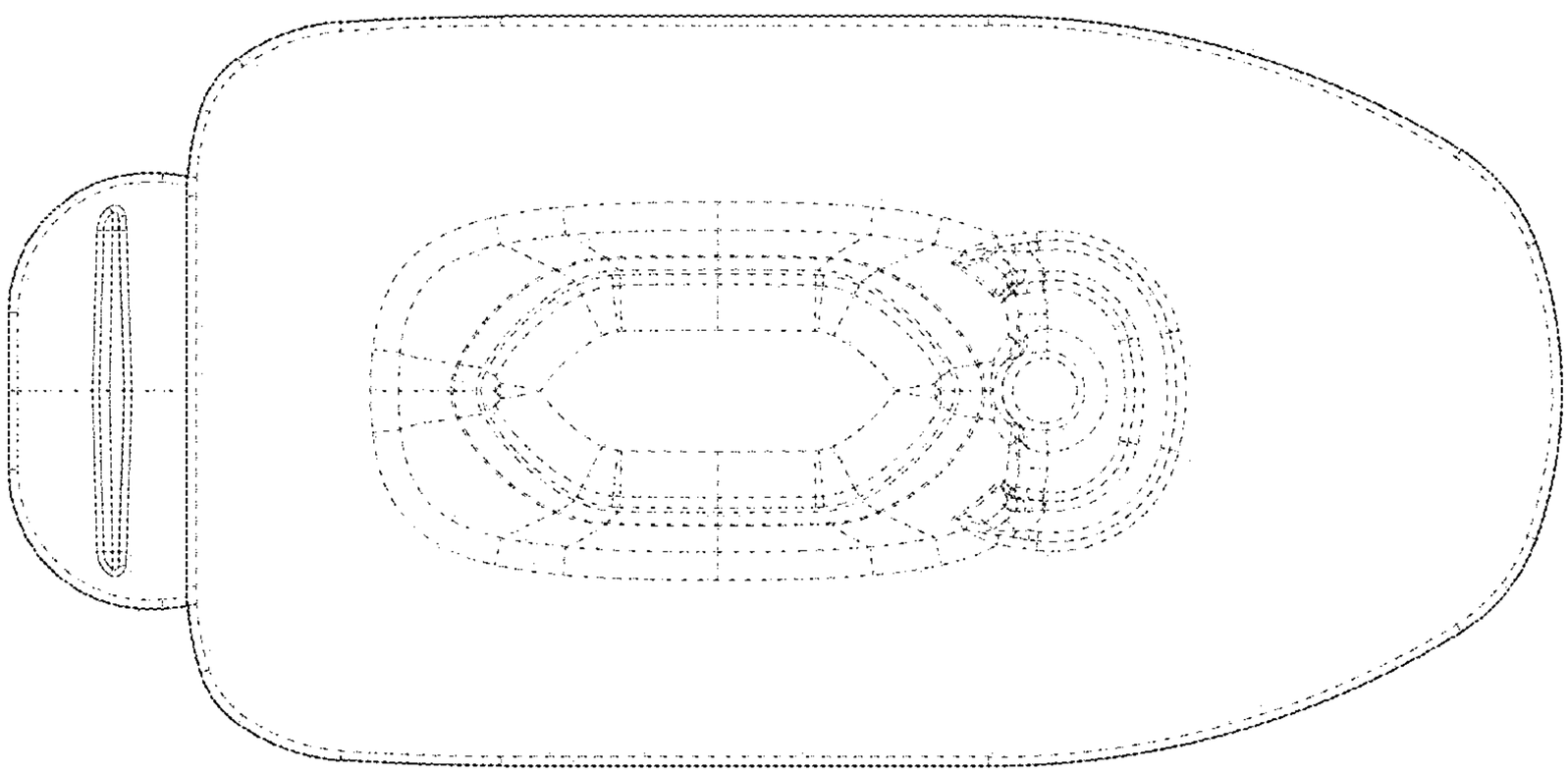

4.1

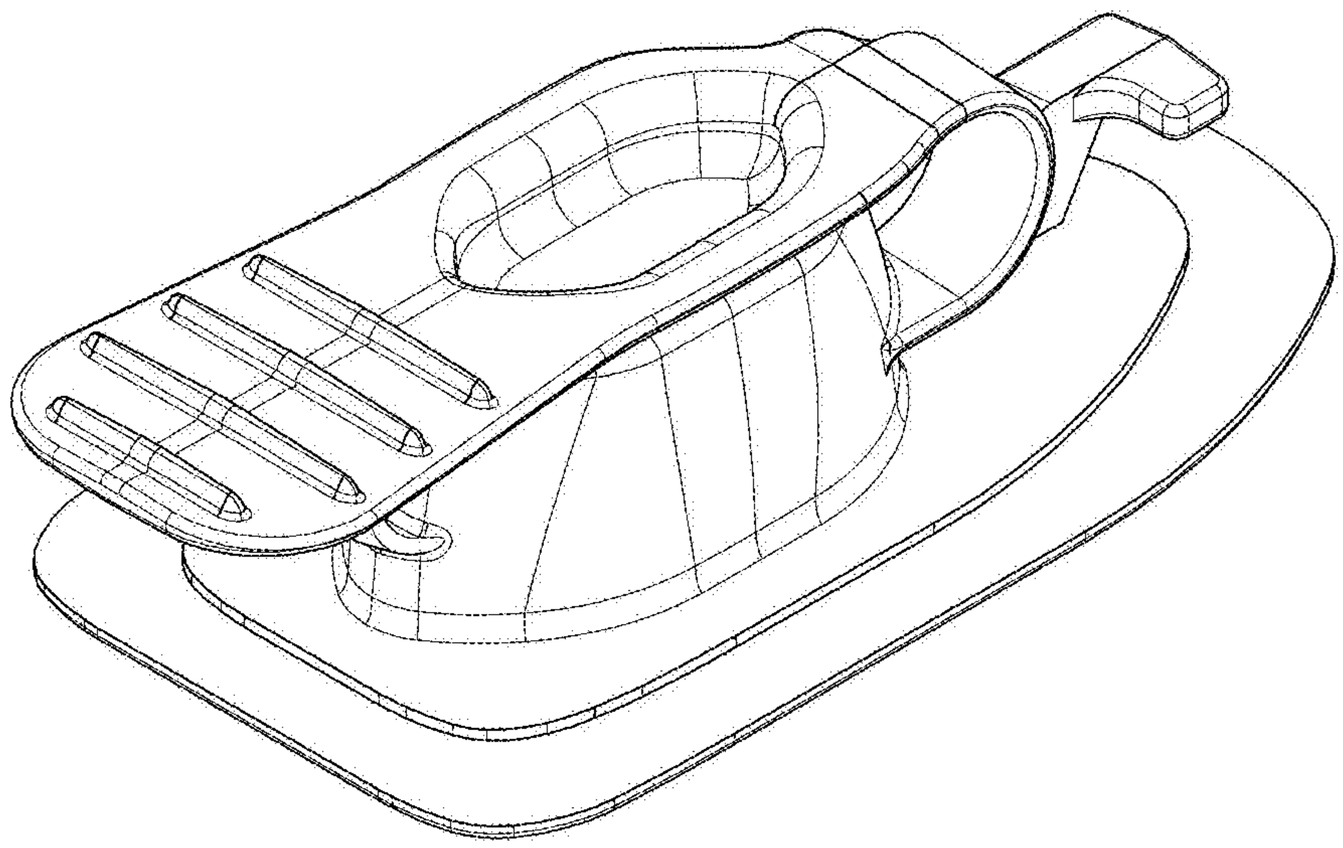

4.2

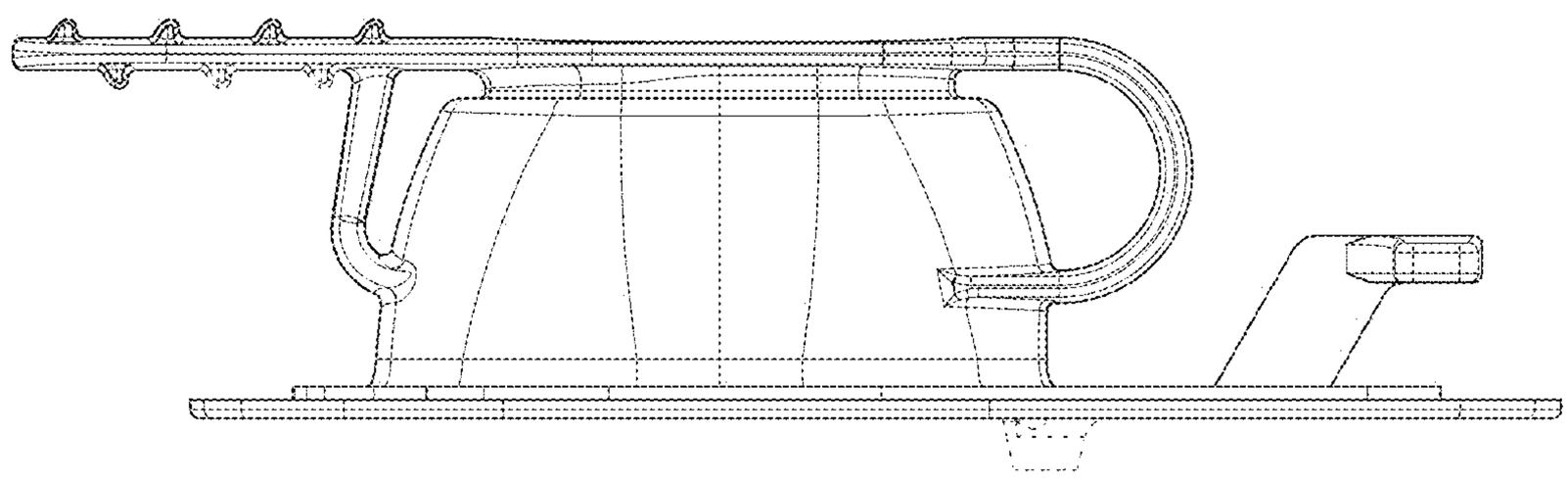

4.3

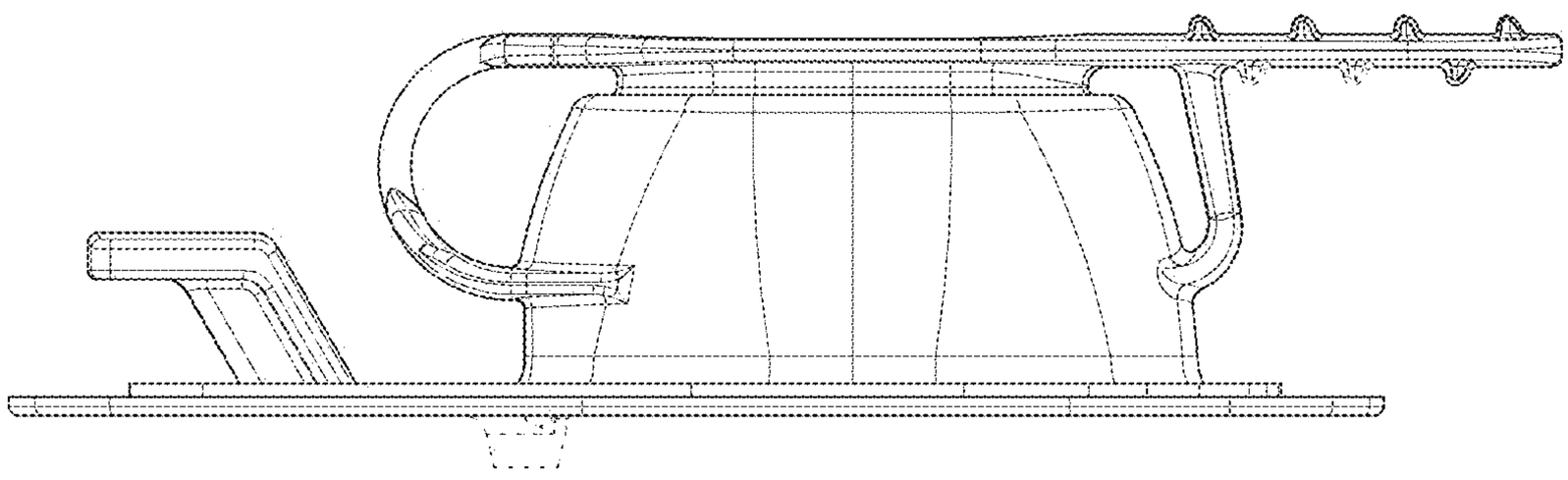

4.4

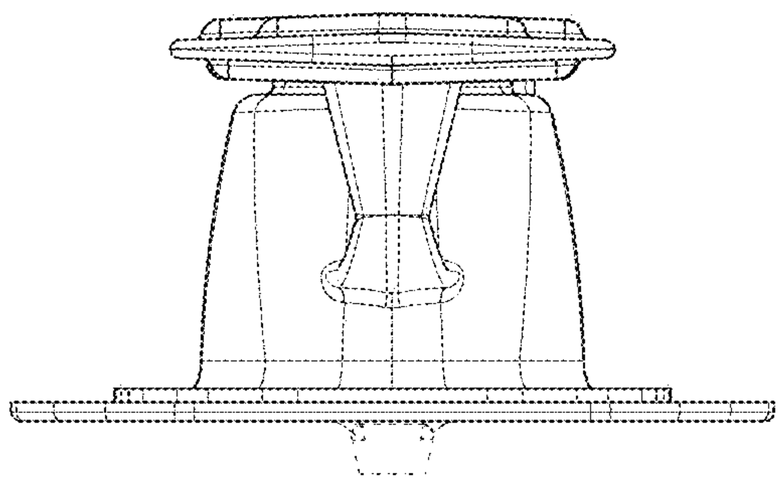

4.5

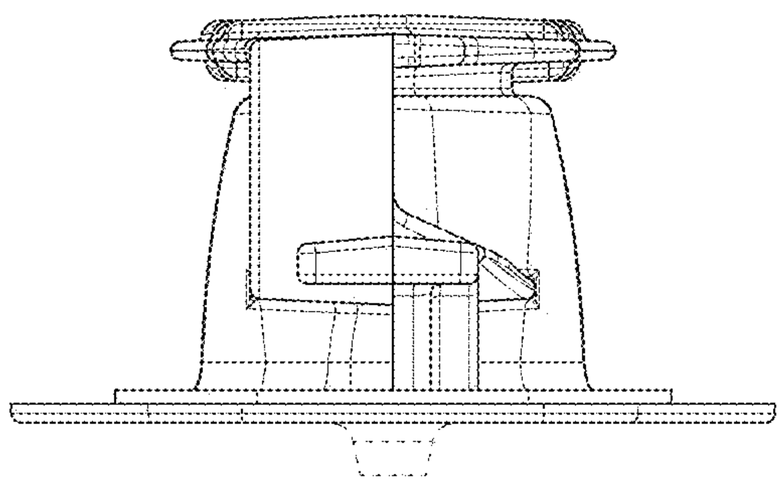

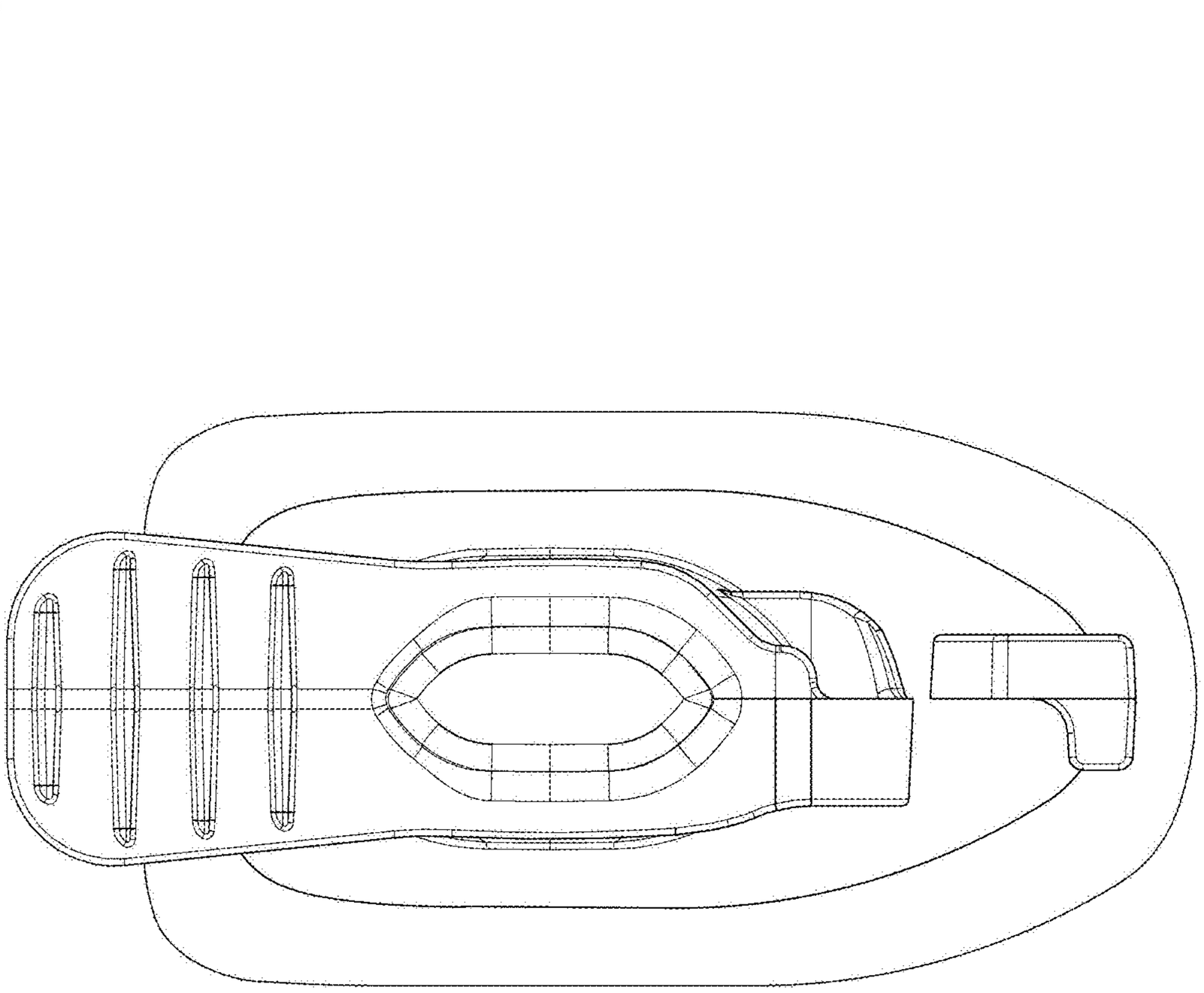
4.6

4.7

