US0D1065537S

(12) United States Design Patent

Mauzerall et al.

(10) Patent No.: US D1,065,537 S
(45) Date of Patent: ** Mar. 4, 2025

(54) **FILTER SEPARATOR**

(71) Applicant: **SteriCUBE Surgical Systems, LLC**, Grapevine, TX (US)

(72) Inventors: **Michele Mauzerall**, St. Petersburg, FL (US); **Maryellen Keenan**, Nutley, NJ (US)

(73) Assignee: **STERICUBE SURGICAL SYSTEMS, LLC**, Grapevine, TX (US)

(**) Term: **15 Years**

(21) Appl. No.: **29/954,950**

(22) Filed: **Jul. 30, 2024**

(51) **LOC (15) Cl.** **24-01**

(52) **U.S. Cl.**
USPC **D24/162**

(58) **Field of Classification Search**
USPC ... D24/108, 110, 110.1, 110.4, 110.5, 110.6, D24/112, 121, 127, 128, 129, 130, 146, D24/162, 164, 169, 186, 216, 223–225, D24/227–228, 231–232; D29/105, 106, D29/108, 111; D5/1, 48, 54, 63, 99; D23/207, 209, 386, 388; D7/700
CPC A61L 2/26; A61L 2/06; A61L 2202/122; A61L 2202/16; A61L 2202/24; Y10T 16/541; E05D 3/12; E05D 3/122
See application file for complete search history.

(56) **References Cited**

U.S. PATENT DOCUMENTS

2,904,857	A *	9/1959	Goetz	B01D 35/00 D24/162
3,088,180	A	5/1963	Lauterbach	
3,966,439	A *	6/1976	Vennos	G01N 1/2205 55/501
D245,703	S	9/1977	Hughes	
D248,965	S	8/1978	Willinger	
4,105,407	A	8/1978	Sanderson	
D250,768	S	1/1979	Springer	
D251,064	S	2/1979	Bergland	
D256,948	S	9/1980	Boersma	
4,247,517	A	1/1981	Sanderson et al.	
4,251,482	A	2/1981	Sanderson et al.	

(Continued)

FOREIGN PATENT DOCUMENTS

CN	201050842 Y	4/2008
DE	3202430 A1	7/1983

(Continued)

OTHER PUBLICATIONS

Stericube MTS300 Multiple Tray Sterilization System MTS300-CAB Transfer Cart. 2024. Site visited Sep. 4, 2024. [https://kenmedsurgical.com/products/stericube-mts300-multiple-tray-sterilization-system-mts300-cab-transfer-cart] (Year: 2024).*

(Continued)

Primary Examiner — Wendy L Arminio
Assistant Examiner — Maheen Khurshid
(74) *Attorney, Agent, or Firm* — Knobbe, Martens, Olson & Bear, LLP

(57) **CLAIM**

The ornamental design for a filter separator as shown and described.

DESCRIPTION

FIG. **1** is a top, front perspective view of a filter separator showing our design.
FIG. **2** is a front view of the filter separator thereof.
FIG. **3** is a back view of the filter separator thereof.
FIG. **4** is a right side view of the filter separator thereof.
FIG. **5** is a left side view of the filter separator thereof.
FIG. **6** is a top view of the filter separator thereof; and,
FIG. **7** is a bottom view of the filter separator thereof.

1 Claim, 5 Drawing Sheets

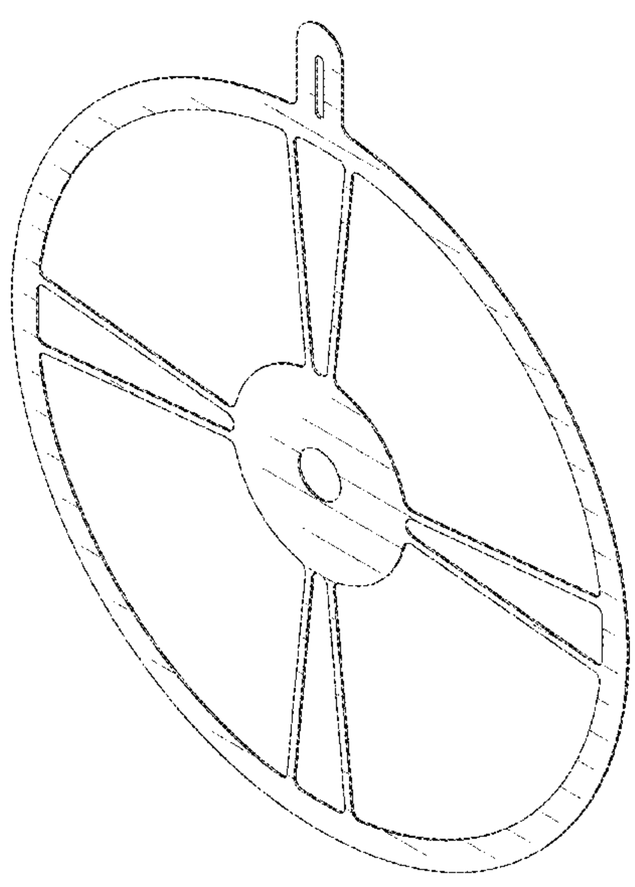

(56) **References Cited**

U.S. PATENT DOCUMENTS

4,416,417 A * 11/1983 Sanderson ..... A61B 50/30 236/92 R
4,450,968 A 5/1984 Muellner
4,487,606 A * 12/1984 Leviton A61M 1/784 55/482
4,551,311 A 11/1985 Lorenz
4,617,178 A 10/1986 Nichols
4,626,971 A 12/1986 Schultz
4,643,303 A 2/1987 Arp et al.
4,670,227 A 6/1987 Smith
4,671,943 A 6/1987 Wahlquist
4,704,254 A 11/1987 Nichols
4,716,025 A 12/1987 Nichols
4,762,688 A 8/1988 Berry
4,783,321 A 11/1988 Spence
4,915,913 A 4/1990 Williams et al.
4,915,918 A 4/1990 Nichols
4,955,318 A 9/1990 Melhorn et al.
4,997,240 A 3/1991 Schmalzl et al.
5,019,345 A 5/1991 Lorenz
5,072,960 A 12/1991 Sperko
5,195,527 A * 3/1993 Hicks A61M 16/0833 128/205.27
5,202,098 A 4/1993 Nichols
5,205,627 A 4/1993 Davison et al.
5,223,229 A 6/1993 Brucker
5,232,277 A 8/1993 Cassady et al.
5,281,400 A 1/1994 Berry
5,324,489 A 6/1994 Nichols et al.
5,346,075 A 9/1994 Nichols et al.
5,352,416 A 10/1994 Wagner
5,369,892 A 12/1994 Dhaemers
5,372,787 A 12/1994 Ritter
5,387,063 A 2/1995 Napierkowski et al.
D358,213 S * 5/1995 Sutton D24/162
5,415,846 A 5/1995 Berry
5,523,519 A 6/1996 Weber et al.
5,535,141 A 7/1996 Lussi
5,588,623 A 12/1996 Leduc
D386,254 S 11/1997 Lung-Ruey
D391,625 S 3/1998 Sabatta
5,732,821 A 3/1998 Stone et al.
D396,267 S 7/1998 Lobermeier
D401,305 S 11/1998 Pettesch
D403,050 S 12/1998 Schlick
5,843,388 A 12/1998 Arroyo et al.
D404,799 S 1/1999 Lu
D404,807 S 1/1999 Nepsund et al.
5,893,618 A 4/1999 Lepage et al.
D410,520 S 6/1999 King
D410,731 S 6/1999 Bowman et al.
5,923,432 A 7/1999 Kral
D412,554 S 8/1999 Gleason
D412,555 S 8/1999 Gleason
5,968,459 A 10/1999 Nalepa et al.
6,000,486 A 12/1999 Romick et al.
6,073,547 A 6/2000 Westbrooks et al.
6,164,738 A 12/2000 Dane et al.
D436,396 S 1/2001 Hui-Chen
D436,649 S 1/2001 Hui-Chen
D436,652 S 1/2001 Hui-Chen
D437,387 S 2/2001 Hui-Chen
D438,284 S 2/2001 King et al.
D441,051 S 4/2001 King
6,218,796 B1 4/2001 Kozlowski
D441,846 S 5/2001 Müllenmeister
D441,848 S 5/2001 Huang
D443,022 S 5/2001 Heren et al.
D444,848 S 7/2001 Heren
D445,170 S 7/2001 Speicher
D445,479 S 7/2001 Thomas
D445,480 S 7/2001 Jacobs et al.
D446,843 S 8/2001 Heren et al.
D447,216 S 8/2001 Heren et al.
D450,806 S 11/2001 Lindholm et al.
D450,809 S 11/2001 Gottwald
D450,810 S 11/2001 Gottwald
6,319,479 B1 11/2001 Houston
D451,583 S 12/2001 Lindholm et al.
D451,979 S 12/2001 VanErdewyk
D452,553 S 12/2001 Lindholm et al.
D453,551 S 2/2002 Lindholm et al.
D454,177 S 3/2002 Tracy
D455,816 S 4/2002 Hoffman
D458,348 S 6/2002 Müllenmeister
D460,997 S 7/2002 Yang
D462,110 S 8/2002 King
D464,116 S 10/2002 Piano
D464,129 S 10/2002 Xu et al.
D465,547 S 11/2002 Tse
D466,972 S 12/2002 Clivio
D467,638 S 12/2002 Lord
D467,648 S 12/2002 Delva
D468,001 S 12/2002 Teskey
D468,800 S 1/2003 Tse
D469,157 S 1/2003 Lobermeier
D471,617 S 3/2003 Zhao
D472,612 S 4/2003 Marshall
D472,613 S 4/2003 Marshall
D472,614 S 4/2003 Marshall
D472,963 S 4/2003 Marshall
D472,964 S 4/2003 Marshall
D473,291 S 4/2003 Marshall
D473,632 S 4/2003 Marshall
D474,528 S 5/2003 Huang
D475,116 S 5/2003 Chan
D475,433 S 6/2003 Citterio
D475,437 S 6/2003 Dimitriadis et al.
D476,060 S 6/2003 Duncan et al.
D476,399 S 6/2003 Panis et al.
D476,722 S 7/2003 Panis et al.
D477,058 S 7/2003 Panis et al.
D477,383 S 7/2003 Desjoyaux et al.
D477,653 S 7/2003 Neufeld et al.
6,620,390 B1 9/2003 Wagner
6,622,862 B1 9/2003 Corrado
D480,452 S 10/2003 Marshall
D482,756 S 11/2003 Duncan
D484,575 S 12/2003 Graves et al.
D486,891 S 2/2004 Cronce, Jr.
D488,208 S 4/2004 Cook
D496,431 S 9/2004 Kollman et al.
6,789,815 B2 9/2004 Moss et al.
D499,794 S 12/2004 Comer
D500,121 S 12/2004 Blomstrom
D501,532 S 2/2005 Weller et al.
D502,251 S 2/2005 Otero
6,867,393 B1 3/2005 Lewis
D504,494 S 4/2005 Ide et al.
D506,551 S * 6/2005 Booth D24/162
D508,106 S 8/2005 Nguyen et al.
6,926,874 B2 8/2005 Ongaro
D510,134 S 9/2005 LaBlaine
D510,611 S 10/2005 Jorgensen et al.
D512,120 S 11/2005 Haug et al.
7,001,441 B2 * 2/2006 Bauer A61L 2/07 220/372
D516,667 S 3/2006 Hin et al.
D516,669 S 3/2006 Antonucci et al.
D518,870 S 4/2006 Thompson
D518,885 S 4/2006 Stout, Jr. et al.
D519,191 S 4/2006 Beall
D523,923 S 6/2006 Nguyen et al.
D526,382 S 8/2006 Thompson
D529,127 S 9/2006 Cueman
D530,004 S 10/2006 Curtin
D530,018 S 10/2006 Loyd
D534,240 S 12/2006 Wang
D534,241 S 12/2006 Wang
D536,438 S 2/2007 Curtin
D536,439 S 2/2007 Pickett
D537,504 S 2/2007 Luo
D538,390 S 3/2007 Sallick et al.
D539,869 S 4/2007 Lopez

(56) **References Cited**

U.S. PATENT DOCUMENTS

D539,875 S 4/2007 Starck
7,198,760 B1 4/2007 Wagner
D543,606 S 5/2007 Pilcher et al.
7,214,354 B2 5/2007 Ongaro
D546,417 S 7/2007 Franson et al.
D546,920 S 7/2007 Fulkerson
D553,225 S 10/2007 Wolf
D554,741 S 11/2007 Peterson et al.
D555,759 S 11/2007 Vreeland
D555,769 S 11/2007 Lee
D556,855 S 12/2007 Müllenmeister
D559,951 S 1/2008 Soriano et al.
D560,273 S 1/2008 Hanna
D564,070 S 3/2008 Tsai
D566,233 S 4/2008 Downey et al.
D567,332 S 4/2008 Nathan et al.
D571,894 S 6/2008 Oh
D572,795 S 7/2008 Kieffer
D574,477 S 8/2008 Spiegel
D574,921 S 8/2008 Massey
D579,078 S 10/2008 DeLine et al.
D579,515 S 10/2008 Bell et al.
D584,378 S 1/2009 Wilson
D584,799 S 1/2009 Zetsche et al.
D587,787 S 3/2009 Ismert et al.
D590,475 S 4/2009 Bell et al.
D591,411 S 4/2009 Weisbeck
D594,089 S 6/2009 Kline et al.
7,544,915 B2 6/2009 Hu
D598,522 S 8/2009 Schoenherr et al.
D599,443 S 9/2009 Lammel et al.
D599,885 S 9/2009 Parsons et al.
D602,120 S 10/2009 Reimann et al.
D606,174 S 12/2009 Martin
D612,914 S 3/2010 Morad
D613,370 S 4/2010 Allard et al.
D613,371 S 4/2010 Nies et al.
D613,818 S 4/2010 Kojima
D617,872 S 6/2010 Ye
D618,303 S 6/2010 Zhang
D619,207 S 7/2010 Jian et al.
D619,681 S 7/2010 Reimann et al.
D621,471 S 8/2010 Bock
D623,267 S 9/2010 Peterson et al.
D625,772 S 10/2010 Olson et al.
D627,439 S 11/2010 Mazzacano et al.
D629,493 S 12/2010 Dane et al.
D629,874 S 12/2010 Hermans
D631,133 S 1/2011 Yoo et al.
D646,373 S 1/2011 Liebson et al.
D631,948 S 2/2011 Yoshida et al.
D633,597 S 3/2011 Citterio
D634,397 S 3/2011 Lautzenheiser
D638,103 S 5/2011 Roll
D638,522 S 5/2011 Yoshida et al.
D638,523 S 5/2011 Yoshida et al.
D639,907 S 6/2011 Jewell et al.
D644,713 S 9/2011 Walton et al.
D644,717 S 9/2011 Larkin et al.
D645,940 S 9/2011 Ando et al.
D646,756 S 10/2011 Flowers et al.
D646,762 S 10/2011 Terry et al.
D652,898 S 1/2012 Flowers et al.
8,100,281 B2 1/2012 Sands et al.
D654,152 S 2/2012 Schulz
D654,990 S 2/2012 Coley
D657,020 S 4/2012 Flowers et al.
D661,784 S 6/2012 Joss
D665,871 S 8/2012 Schmitt
D666,271 S 8/2012 Shi et al.
D666,273 S 8/2012 Shi et al.
D667,081 S 9/2012 Yoo et al.
D669,963 S 10/2012 O'Brien et al.
D672,432 S 12/2012 Spangler
D672,434 S 12/2012 Perez
D672,447 S 12/2012 Yano et al.
D674,055 S 1/2013 Lord
D682,989 S 5/2013 Eagle
8,454,901 B1 6/2013 Snyder
D685,876 S 7/2013 Cutler et al.
D686,692 S 7/2013 Schaub et al.
8,505,959 B2 8/2013 Darling
D690,798 S 10/2013 Bonzer
D691,244 S 10/2013 Ho
D691,698 S 10/2013 Frey
D692,526 S 10/2013 Stein et al.
D694,856 S 12/2013 Madsen
D697,170 S 1/2014 Bradford et al.
D697,171 S 1/2014 Bradford et al.
D697,172 S 1/2014 Bradford et al.
D697,591 S 1/2014 Boeltl et al.
D698,012 S 1/2014 Schoenherr et al.
D700,277 S 2/2014 Bollerod
D700,279 S 2/2014 Bollerod
D700,295 S 2/2014 Flowers et al.
D700,296 S 2/2014 Flowers et al.
D700,297 S 2/2014 Flowers et al.
D701,293 S 3/2014 Mjelde
D701,587 S 3/2014 Andrew
D703,290 S 4/2014 Mora et al.
D704,314 S 5/2014 Van De Klippe et al.
D707,793 S 6/2014 Von Der Lancken et al.
D710,970 S 8/2014 Cooper et al.
D710,973 S 8/2014 Madsen et al.
D713,494 S 9/2014 Sato
D714,691 S 10/2014 Costello et al.
D714,692 S 10/2014 Costello et al.
D714,914 S 10/2014 Georgeson
D722,675 S 2/2015 Del Ponte et al.
D724,183 S 3/2015 Tomasello
D725,240 S 3/2015 Nielson et al.
D728,743 S 5/2015 Giles
D728,757 S 5/2015 Graham
D731,619 S 6/2015 Smith et al.
D734,436 S 7/2015 Raether
D737,938 S 9/2015 Schoenherr et al.
D738,469 S 9/2015 Flowers et al.
D738,992 S 9/2015 Flowers et al.
D740,393 S 10/2015 Gehrung
D746,411 S 12/2015 Aoki et al.
D751,176 S 3/2016 Schoenherr et al.
D751,178 S 3/2016 Gibson
D753,790 S 4/2016 Torgerud
D754,308 S 4/2016 Nakagawa
D754,817 S 4/2016 Dille
D755,344 S 5/2016 Reckin et al.
D756,493 S 5/2016 Crochet et al.
D759,205 S 6/2016 Eads
D760,356 S 6/2016 Berger
D760,357 S 6/2016 Cline
D761,380 S 7/2016 Bahadir
D762,833 S 8/2016 Ogg
9,439,992 B2 9/2016 Webb et al.
D773,014 S 11/2016 Pale
D782,625 S 3/2017 Beall
D785,134 S 4/2017 Foster et al.
D785,142 S 4/2017 Monaghan
9,616,143 B2 4/2017 Snyder et al.
D786,406 S 5/2017 Schoenherr et al.
D787,024 S 5/2017 Ball
D787,638 S 5/2017 Schoenherr et al.
D790,673 S 6/2017 Santos
D792,962 S 7/2017 Honeyball
9,694,093 B2 7/2017 Snyder et al.
9,724,439 B2 8/2017 Webb et al.
D797,256 S 9/2017 Schaubach
D798,996 S 10/2017 Sgroi, Jr.
D798,999 S 10/2017 Stein et al.
D800,886 S 10/2017 Lin
D802,090 S 11/2017 Mercer
D803,992 S 11/2017 Huber
9,808,545 B2 11/2017 Mauzerall et al.
9,833,524 B2 12/2017 Mauzerall et al.
D807,483 S 1/2018 Combs et al.

(56) **References Cited**

U.S. PATENT DOCUMENTS

D809,632 S 2/2018 Wolf
D810,875 S 2/2018 Bahler
D811,538 S 2/2018 Carroll et al.
D811,548 S 2/2018 Garland
D813,357 S 3/2018 Bryant et al.
D813,368 S 3/2018 Zuo
D816,202 S 4/2018 Zuo et al.
D818,087 S 5/2018 Seum et al.
D818,095 S 5/2018 Cho et al.
D818,097 S 5/2018 Cho et al.
D818,098 S 5/2018 Cho et al.
D819,169 S 5/2018 Osborne
D819,171 S 5/2018 Vallo et al.
D819,183 S 5/2018 Seum et al.
D820,412 S 6/2018 Seum et al.
D822,157 S 7/2018 L'Henaff
D824,010 S 7/2018 Lu et al.
D827,765 S 9/2018 Ward
D827,772 S 9/2018 Wojan
D827,781 S 9/2018 Slothwater
D828,488 S 9/2018 Sgroi, Jr.
D828,496 S 9/2018 Weingarten
D828,517 S 9/2018 Breault
10,086,100 B1 10/2018 Mauzerall et al.
10,111,972 B2 10/2018 Mauzerall et al.
D833,584 S 11/2018 Levi
D838,349 S 1/2019 McKeone et al.
10,166,305 B2 1/2019 Mauzerall et al.
10,179,183 B2 * 1/2019 Snyder A61B 50/13
D840,504 S 2/2019 Bayyouk et al.
D841,124 S 2/2019 Haney et al.
D847,299 S 4/2019 Thompson
D847,942 S 5/2019 McPeek
D847,947 S 5/2019 Liu
D849,207 S 5/2019 McKeone et al.
D850,577 S 6/2019 Aakernes et al.
D852,319 S 6/2019 Hellman
D852,323 S 6/2019 Mccutcheon
D852,327 S 6/2019 Garland
D856,472 S 8/2019 Zou
D859,595 S 9/2019 Mangold
D860,401 S 9/2019 Cherney et al.
D861,130 S 9/2019 Carls et al.
10,406,252 B2 9/2019 Graves et al.
10,413,628 B2 * 9/2019 Mauzerall A61L 2/26
D862,656 S 10/2019 Guerra
D863,499 S 10/2019 Tsukii
D863,510 S 10/2019 Meyers et al.
D863,511 S 10/2019 Meyers et al.
D865,909 S 11/2019 Hsieh
D868,217 S 11/2019 Chen
D870,848 S 12/2019 Sesser
D872,840 S 1/2020 Meyers et al.
D873,399 S 1/2020 Nykowski et al.
D876,581 S 2/2020 Hsieh
D879,254 S 3/2020 Seum et al.
D880,659 S 4/2020 Kumar et al.
D882,038 S 4/2020 Loepfe
D882,727 S 4/2020 Lee
D883,426 S 5/2020 Lu
D884,129 S 5/2020 Hammes et al.
D884,829 S 5/2020 Kikya et al.
D884,837 S 5/2020 Park
D886,247 S 6/2020 Nilsen
D888,219 S 6/2020 Peet et al.
D889,601 S 7/2020 Sesser et al.
D893,685 S 8/2020 Evans
D895,076 S 9/2020 Kuroda et al.
D895,767 S 9/2020 Schoenherr et al.
D895,768 S 9/2020 Schoenherr et al.
D896,927 S 9/2020 Soulier et al.
D897,503 S 9/2020 Hodge
10,786,589 B2 9/2020 Mauzerall et al.
D899,558 S 10/2020 Wei et al.
D899,573 S * 10/2020 Ogihara D24/162
D900,297 S 10/2020 Hedlund et al.
D900,976 S 11/2020 Soulier et al.
D900,977 S 11/2020 Soulier et al.
D901,625 S 11/2020 Garland et al.
D901,638 S 11/2020 Soulier et al.
D901,641 S 11/2020 Seum et al.
10,828,383 B2 11/2020 Snyder et al.
D904,558 S 12/2020 Klaus et al.
D904,570 S 12/2020 Soulier et al.
10,881,997 B2 * 1/2021 Turbett A61L 2/07
D915,560 S 4/2021 Eads
D917,684 S 4/2021 Jung et al.
D922,545 S 6/2021 Kang et al.
11,071,796 B2 7/2021 Mauzerall et al.
11,110,187 B2 9/2021 Mauzerall et al.
D936,186 S 11/2021 Soulier et al.
D936,788 S 11/2021 Lei
D936,801 S 11/2021 Truesdel
D937,391 S 11/2021 Price
D939,070 S 12/2021 Yang
D939,661 S 12/2021 Lin
D939,682 S 12/2021 Chen
11,207,434 B2 * 12/2021 Turbett A61L 2/07
D940,823 S 1/2022 Fujinami et al.
D952,793 S 5/2022 Du
D952,794 S 5/2022 Du
11,331,401 B2 5/2022 Mauzerall et al.
D958,288 S 7/2022 De Azevedo et al.
D963,119 S 9/2022 Soulier et al.
D963,128 S 9/2022 Soulier et al.
11,654,206 B2 5/2023 Mauzerall et al.
11,839,692 B2 12/2023 Mauzerall et al.
11,890,389 B2 2/2024 Snyder et al.
2003/0116636 A1 6/2003 Burkett et al.
2004/0011689 A1 1/2004 Bauer
2004/0096355 A1 5/2004 Ishibiki
2004/0101456 A1 5/2004 Kuroshima et al.
2004/0222116 A1 11/2004 Bauer
2004/0227315 A1 11/2004 Van Landingham
2005/0132924 A1 6/2005 Bothun et al.
2005/0153052 A1 7/2005 Williams et al.
2006/0032770 A1 2/2006 Orbay et al.
2006/0108757 A1 5/2006 Brookmire et al.
2006/0249313 A1 11/2006 Kamen et al.
2007/0039294 A1 2/2007 Airey
2007/0160494 A1 7/2007 Sands
2008/0063580 A1 3/2008 Von Lersner
2008/0087231 A1 4/2008 Gabriel et al.
2008/0172295 A1 7/2008 Watson
2010/0078905 A1 4/2010 Holtan
2012/0082589 A1 4/2012 Ladison
2013/0272925 A1 10/2013 Ozdamar
2013/0322004 A1 12/2013 Park
2014/0030144 A1 1/2014 Krosney et al.
2014/0079589 A1 3/2014 Landgrebe et al.
2015/0023839 A1 1/2015 Snyder et al.
2015/0078960 A1 3/2015 Krosney et al.
2015/0107627 A1 4/2015 Snyder et al.
2015/0209455 A1 7/2015 Turbett et al.
2015/0209456 A1 7/2015 Turbett
2015/0209462 A1 7/2015 Turbett et al.
2015/0284018 A1 10/2015 Krosney
2015/0314026 A1 * 11/2015 Mauzerall A61L 2/00
96/417
2016/0008503 A1 * 1/2016 Webb B01D 35/02
312/229
2017/0189843 A1 7/2017 Turbett et al.
2018/0015190 A1 1/2018 Turbett
2018/0021464 A1 1/2018 Mauzerall et al.
2018/0085480 A1 3/2018 Mauzerall et al.
2018/0221803 A1 8/2018 Turbett et al.
2019/0030198 A1 1/2019 Mauzerall et al.
2019/0060494 A1 2/2019 Mauzerall et al.
2019/0175774 A1 6/2019 Snyder et al.
2020/0016289 A1 1/2020 Mauzerall et al.
2020/0030470 A1 1/2020 Mauzerall et al.
2021/0000993 A1 1/2021 Mauzerall et al.
2021/0046202 A1 2/2021 Snyder et al.
2021/0077640 A1 3/2021 Mauzerall et al.

(56) **References Cited**

U.S. PATENT DOCUMENTS

2021/0346536	A1	11/2021	Mauzerall et al.
2022/0370672	A1	11/2022	Mauzerall et al.
2023/0310669	A1	10/2023	Mauzerall et al.
2024/0115750	A1	4/2024	Mauzerall et al.
2024/0181103	A1	6/2024	Snyder et al.

FOREIGN PATENT DOCUMENTS

DE	4125673	C1		7/1992
DE	202008001263	U1		7/2008
EP	1566185			8/2005
EP	1839683			10/2007
FR	2807325	A3		10/2001
GB	2333959	A		8/1999
GB	6383428		*	8/2024
JP	58-068569	U		12/1981
JP	1981-163341	U		12/1981
JP	S63-503363	A		12/1988
JP	H02-136765	U		11/1990
JP	H04-1380	A		1/1992
JP	05-061266	U		8/1993
JP	H06-146363	A		5/1994
JP	H07-505798	A		6/1995
JP	H08-179093	A		7/1996
JP	10-27141	A		1/1998
JP	2000-043730	A		2/2000
JP	2001-234697	A		8/2001
JP	2002-019918			9/2003
JP	D 1184448	S		9/2003
JP	2002-325826			6/2004
JP	2004-165197			6/2004
JP	3127597	U		12/2006
JP	2009-214736			9/2009
JP	2001-112857	A		8/2011
JP	4762432	B2		8/2011
JP	2012-166747			2/2013
JP	2013-027707	A		2/2013
WO	WO 1999/049903			10/1999
WO	WO 2007/000639			1/2007
WO	WO 2010/128408			11/2010
WO	WO 2015/153084			10/2015
WO	WO 2016/032853			6/2016
WO	WO 2017/024260			2/2017
WO	WO 2019/023710			1/2019
WO	WO 2020/005844			1/2020

OTHER PUBLICATIONS

Amsco Material Handling Accessories—Small Sterlizers and Aerators, 2 pages, Sep. 1, 2010, Steris Corporation.

Anonym: 11 Druckgesteuert—waschbar—zerlegbar 11, Wagner-Steriset, Retrieved from the Internet: URL:http://www.wagner-steriset.de/fileadmin/pdf/SterisetPCD034.pdf, Apr. 5, 2013 [retrieved on Oct. 5, 2017].

Anonym: 11 The 134 ~C drain (standard) 11, Wagner Gmbh, Retrieved from the Internet: URL: http://www. wag ner-steriset.de/en/the-ste riset-system/sterisetsconcept/the-134-c-drain-standard/, Apr. 11, 2004 [retrieved on Oct. 6, 2017].

CMS Clarifies Sterilization Guidelines for Ophthalmic ASCs—2015, Feb. 26, 2015, MLN Connects™ Provider eNews, https://www.aao.org/clinical-statement/cms-clarifies-sterilization-guidelines-ophthalmic-#:-:text=IUSS%20is%20the%20term%20currently%20accepted%20to% . . . (Accessed Aug. 5, 2021) (Year: 2015).

Getinge 4003 Floor Loading Carts Product Specification, 2 pages, Getinge Group, date unknown.

Operator Manual, Amsco C Series Small Steam Sterilizers, 154 paqes, May 7, 2012, Steris Corporation.

Operator Manual, Amsco Century Medium Steam Sterlizer, 186 pages, Jul. 16, 2007, Steris Corporation.

Operator Manual, Amsco Century Medium Steam Sterlizers, 135 pages, Dec. 16, 2005, Steris Corporation.

Prophy-Mate. Datasheet (online). NSK, 2002, Retrieved from the internet: URL:http://www.nsktech.com.au/uploads/704 72/ufiles/Prophy _Mate .pdf [retrieved on Aug. 28, 2019].

Scores 510 k Summary Pursuant to 21 CFR 807.92, 6 pages, Jul. 26, 2012, AmMed Surgical Equipment, LLC/FDA.

Scores Cabinet Landing Page, 1 page, AmMed Surgical Equipment, LLC, date unknown.

Scores Faq, 2 pages, AmMed Surgical Equipment, LLC, date unknown.

Scores Instructions for Use, 22 pages, AmMed Surgical Equipment, LLC, date unknown.

Scores Savings Analysis, 2 pages, AmMed Surgical Equipment, LLC, date unknown.

Scores Testing Summary, 1 page, AmMed Surgical Equipment, LLC, date unknown.

Scores Unit Images in Open Configurations and Landing Page Information About the Scores Unit, 2 pages, AmMed Surgical Equipment, LLC, date unknown.

Steris Loading Equipment for Amsco Evolution and Evolution—L Steam Sterilizers—North America data sheet, © 2011.

The Amsco Loading Car and Transfer Carriage—III data sheet, 2 pages, Jul. 10, 1998, Steris Corporation.

The Scores Advantage: Time Energy & Cost Savings, 1 page, AmMed Surgical Equipment, LLC, date unknown.

The Steris Amsco Sterilization Container System User's Guide, © 2003-2006.

Wagner Sterilsystem, The SteriSet System, pp. 6-7, May 6, 2005, https://web.archive.org/web/20050506101217/http://www.wagnersteriset.de/html/mOI E23.htm.

Wagner Sterilsysteme, "Or Filter After All?", pp. 4-5, Aug. 25, 2005, https://web.archive.org/web/20110112052317/http://www.wagnersteriset.de/imaQes/PDFs/Container/Steri Set Ru ndfi lter 2003.pdf.

Wagner Sterilsysteme, The SteriSet System, pp. 1-3, Aug. 25, 2005, https ://web. archive.org/web/20050825213235/http://www.wagnersteriset.de/html/mOl E21 .htm.

* cited by examiner

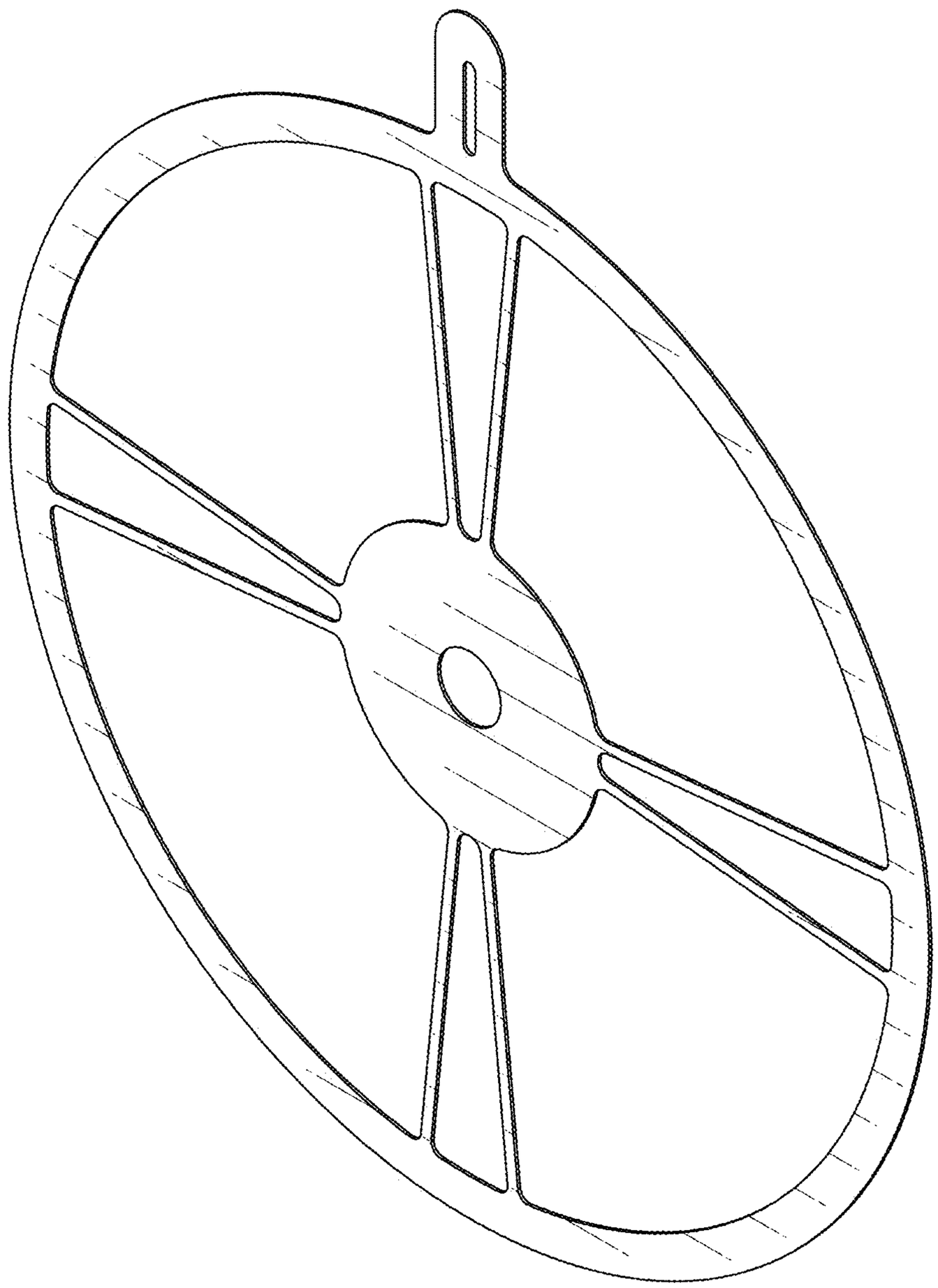

FIG. 1

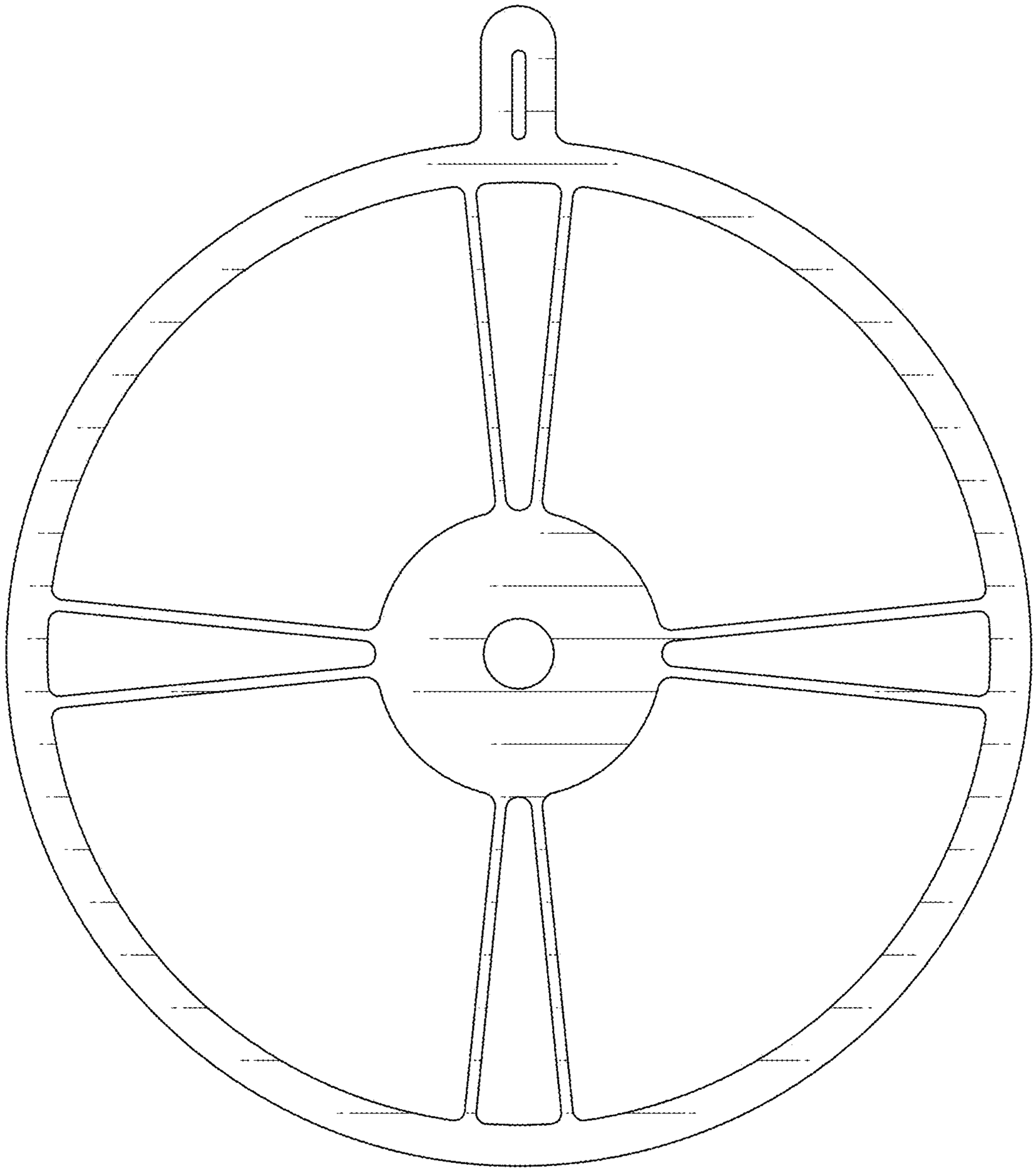

FIG. 2

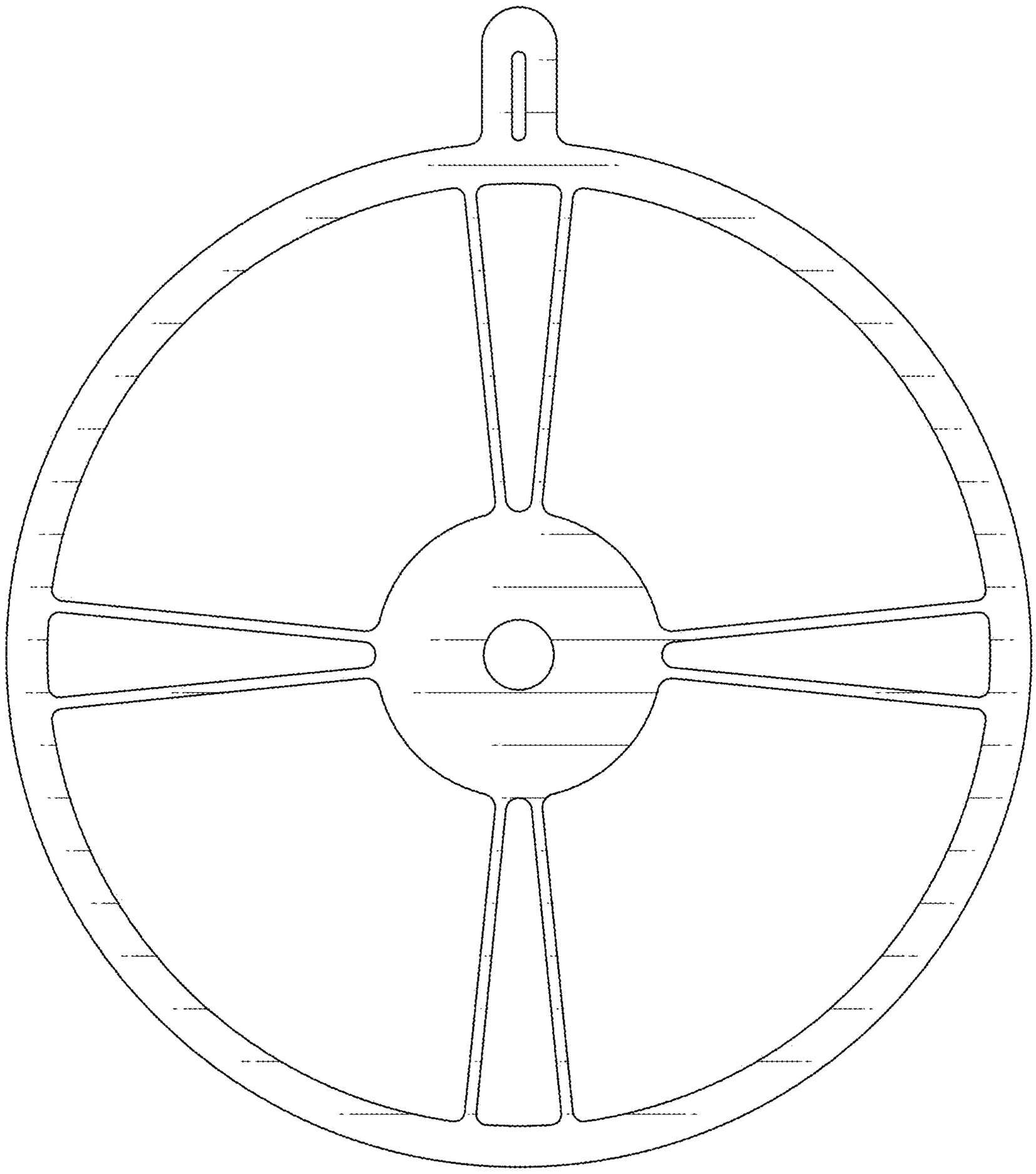

FIG. 3

FIG. 4

FIG. 5

FIG. 6

FIG. 7