US0D1044730S

(12) United States Design Patent

Bandura et al.

(10) Patent No.: US D1,044,730 S
(45) Date of Patent: ** Oct. 1, 2024

(54) **CONNECTOR**

(71) Applicant: **Molex, LLC**, Lisle, IL (US)

(72) Inventors: **Michael A. Bandura**, Naperville, IL (US); **Venkatesh Sathish**, Bengaluru (IN); **Jeffrey Alan Joniak**, Homer Glen, IL (US)

(73) Assignee: **Molex, LLC**, Lisle, IL (US)

(**) Term: **15 Years**

(21) Appl. No.: **29/886,204**

(22) Filed: **Mar. 6, 2023**

(51) **LOC (14) Cl.** **13-03**

(52) **U.S. Cl.**
USPC **D13/133**

(58) **Field of Classification Search**
USPC ... D13/133, 101, 123, 146, 147, 153, 137.1, D13/149; D14/435.1, 433
CPC G02B 6/38; G02B 6/38875; G02B 6/4284; H01R 13/40; H01R 13/58; H01R 13/627; H01R 13/66; H01R 13/6335; H01R 13/6272; H01R 13/6397; H01R 13/639; H01R 13/6275; H01R 31/06; H01R 24/00; H01R 24/46; H01R 43/26
See application file for complete search history.

(56) **References Cited**

U.S. PATENT DOCUMENTS

D379,969	S	*	6/1997	Tan	D13/147
D400,170	S	*	10/1998	Asai	D13/133
D413,099	S	*	8/1999	Brandt	D13/133
D413,103	S		8/1999	Wu	
D416,862	S		11/1999	Chiou	
D420,642	S		2/2000	Wu	
D431,528	S	*	10/2000	Zhu	D13/133
D444,768	S	*	7/2001	Kishi	D13/133
D470,107	S	*	2/2003	Li	D13/133
D494,137	S	*	8/2004	Fang	D13/133
D504,401	S		4/2005	Wang	
D507,236	S	*	7/2005	Han	D13/133

(Continued)

FOREIGN PATENT DOCUMENTS

TW	D218895 S	5/2022
TW	D223376 S	2/2023
TW	D223498 S	2/2023

OTHER PUBLICATIONS

Molex 8.00MM Coeuer Sentrality, available in molex.com, announced Jan. 31, 2022 [online], [site visited Jun. 5, 2024], Internet URL: https://www.molex.com/en-us/part-list/0304?currentPage=8 (Year: 2022).*

(Continued)

Primary Examiner — Rosemary K Tarcza
Assistant Examiner — Leah E Hoeferkamp

(57) **CLAIM**

The ornamental design for a connector, as shown and described.

DESCRIPTION

FIG. **1** is a front top perspective view of a connector showing our new design;
FIG. **2** is a front bottom perspective view thereof;
FIG. **3** is a front view thereof;
FIG. **4** is a rear view thereof;
FIG. **5** is a left side view thereof;
FIG. **6** is a right side view thereof;
FIG. **7** is a top view thereof; and,
FIG. **8** is a bottom view thereof.
The uneven-length broken lines immediately adjacent to the shaded areas define the bounds of the claimed design and form no part thereof. The even-length broken lines depicting the remainder of the connector form no part of the claimed design.

1 Claim, 8 Drawing Sheets

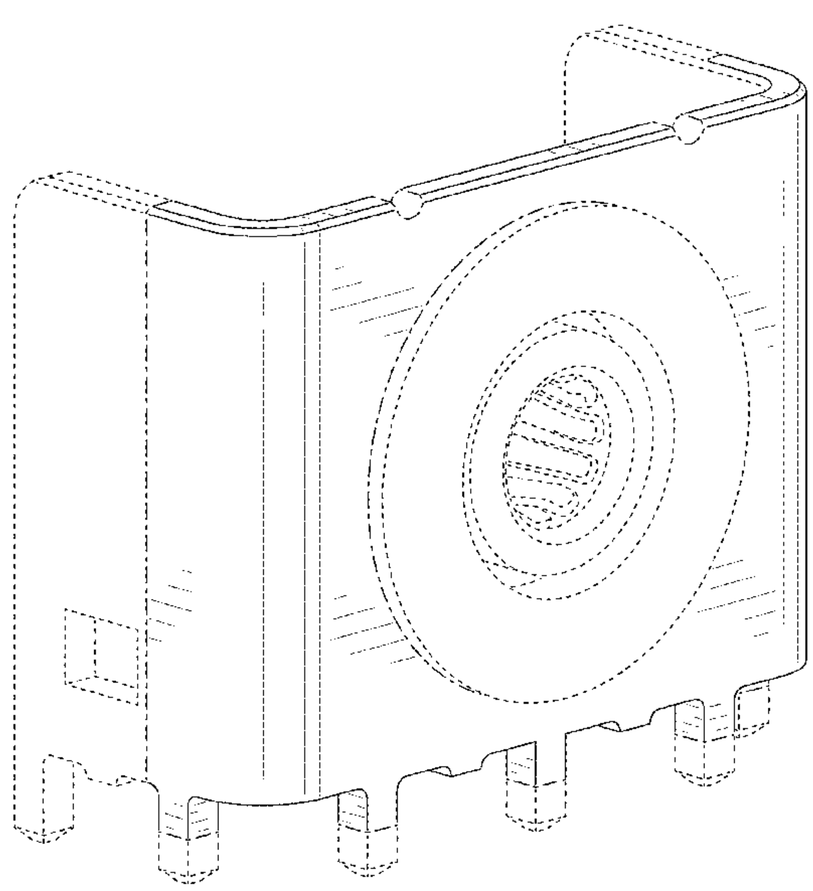

(56) **References Cited**

U.S. PATENT DOCUMENTS

D508,894	S	*	8/2005	Zhao	D13/133
D513,606	S	*	1/2006	Yamane	D13/149
D523,401	S	*	6/2006	Wang	D13/154
D534,124	S		12/2006	Taguchi	
D539,740	S	*	4/2007	Zhang	D13/133
D541,219	S	*	4/2007	Yang	D13/147
D549,658	S	*	8/2007	Asai	D13/147
D558,675	S		1/2008	Chien	
D606,024	S	*	12/2009	Chiang	D13/154
D619,092	S	*	7/2010	Eilertsen	D13/120
D619,094	S		7/2010	Eilertsen	
D631,844	S	*	2/2011	Su	D13/147
D640,986	S		7/2011	Gong	
D650,758	S		12/2011	Sasada	
D680,494	S	*	4/2013	Hirakawa	D13/133
D683,313	S	*	5/2013	Hirakawa	D13/133
D701,491	S		3/2014	Miyoshi	
D734,265	S	*	7/2015	Hoshiba	D13/133
D756,932	S		5/2016	Asano	
D761,205	S	*	7/2016	Zhu	D13/133
9,680,268	B1		6/2017	Finona	
D817,881	S	*	5/2018	Dobashi	D13/133
D845,241	S		4/2019	Yang	
D855,244	S		7/2019	Sonneman	
D867,298	S	*	11/2019	Joniak	D13/146
D868,000	S		11/2019	Joniak et al.	
D870,364	S		12/2019	Sonneman	
D870,365	S		12/2019	Sonneman	
D876,363	S	*	2/2020	Joniak	D13/146
D877,702	S	*	3/2020	Joniak	D13/146
D913,950	S	*	3/2021	Chen	D13/147
D913,951	S	*	3/2021	Chen	D13/147
D936,015	S	*	11/2021	Lu	D13/133
D953,989	S		6/2022	Egawa	
D953,990	S		6/2022	Egawa	
D969,085	S	*	11/2022	Katou	D13/133
D1,008,972	S		12/2023	Liao	
2020/0194949	A1		6/2020	Egawa	
2023/0170636	A1	*	6/2023	Zhang	H01R 13/111 439/248

OTHER PUBLICATIONS

Ecsconn 10 Contacts Power Tap, available in escsonn.com, announced Jan. 6, 2018 [online], [site visited Jun. 5, 2024], Internet URL: https://www.ecsconn.com/DrawingPDF/Power-Tap/13PTS10.pdf (Year: 2018).*

Notice of Allowance received for Design U.S. Appl. No. 29/886,209, mailed on Jun. 14, 2024, 7 pages.

Notice of Allowance received for Design U.S. Appl. No. 29/886,213, mailed on Jun. 27, 2024, 8 pages.

Notice of Allowance received for Design U.S. Appl. No. 29/886,216, mailed on Jun. 28, 2024, 7 pages.

Notice of Allowance received for Design U.S. Appl. No. 29/886,218, mailed on Jun. 27, 2024, 7 pages.

Notice of Allowance received for Design U.S. Appl. No. 29/886,211, mailed on Jun. 27, 2024, 7 pages.

Notice of Allowance received for Design U.S. Appl. No. 29/886,214, mailed on Jun. 27, 2024, 7 pages.

* cited by examiner

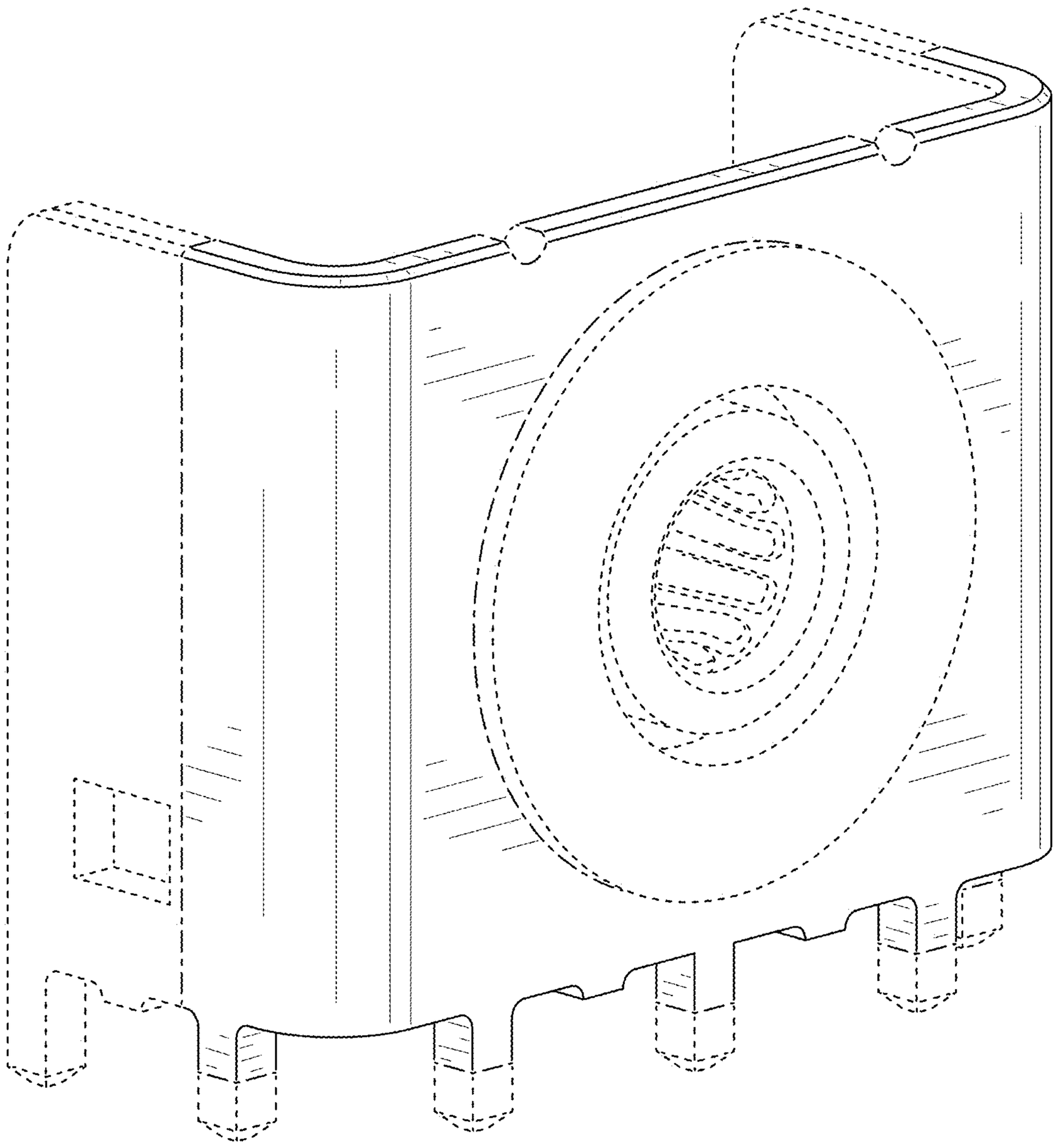

FIG. 1

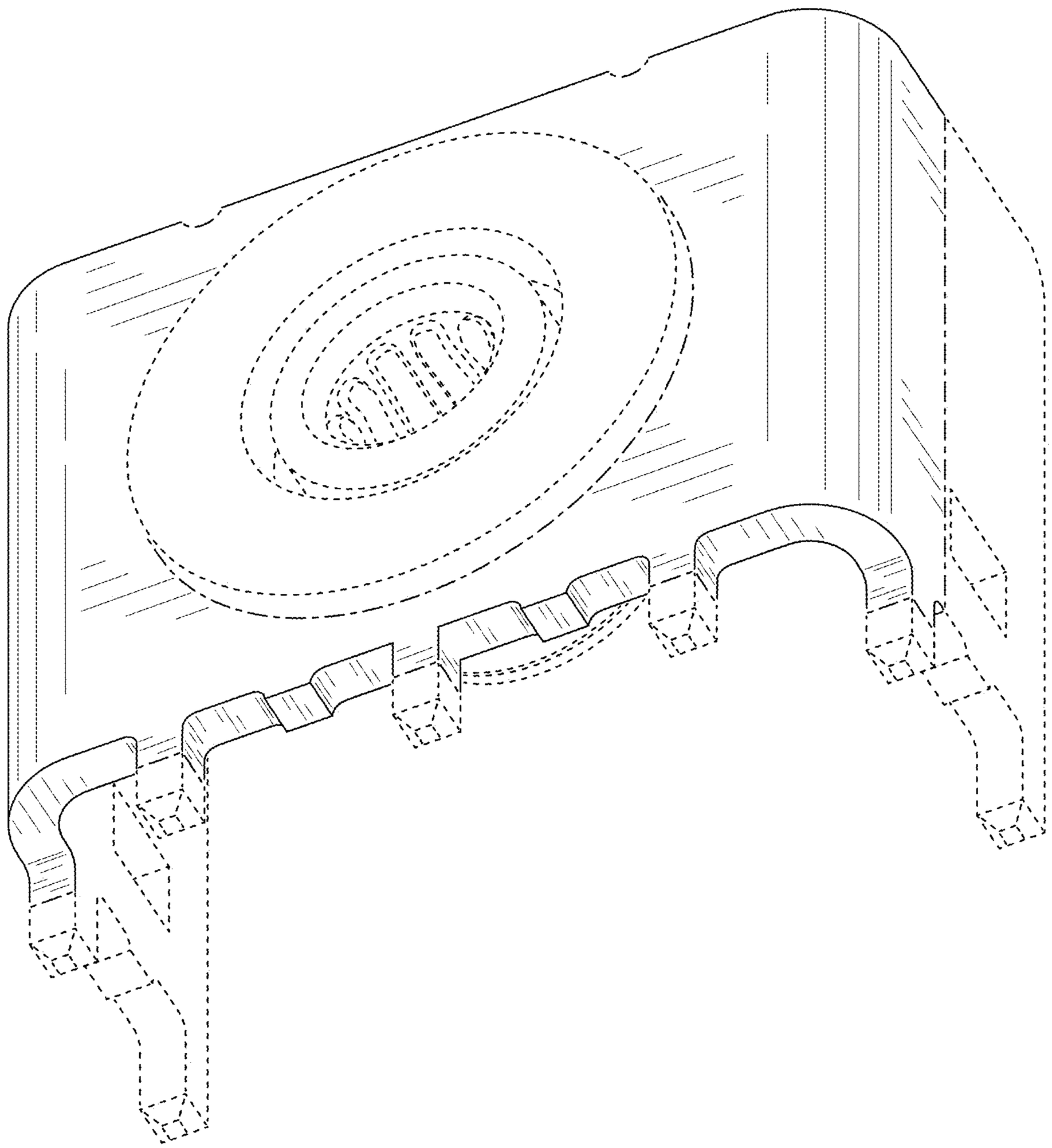

FIG. 2

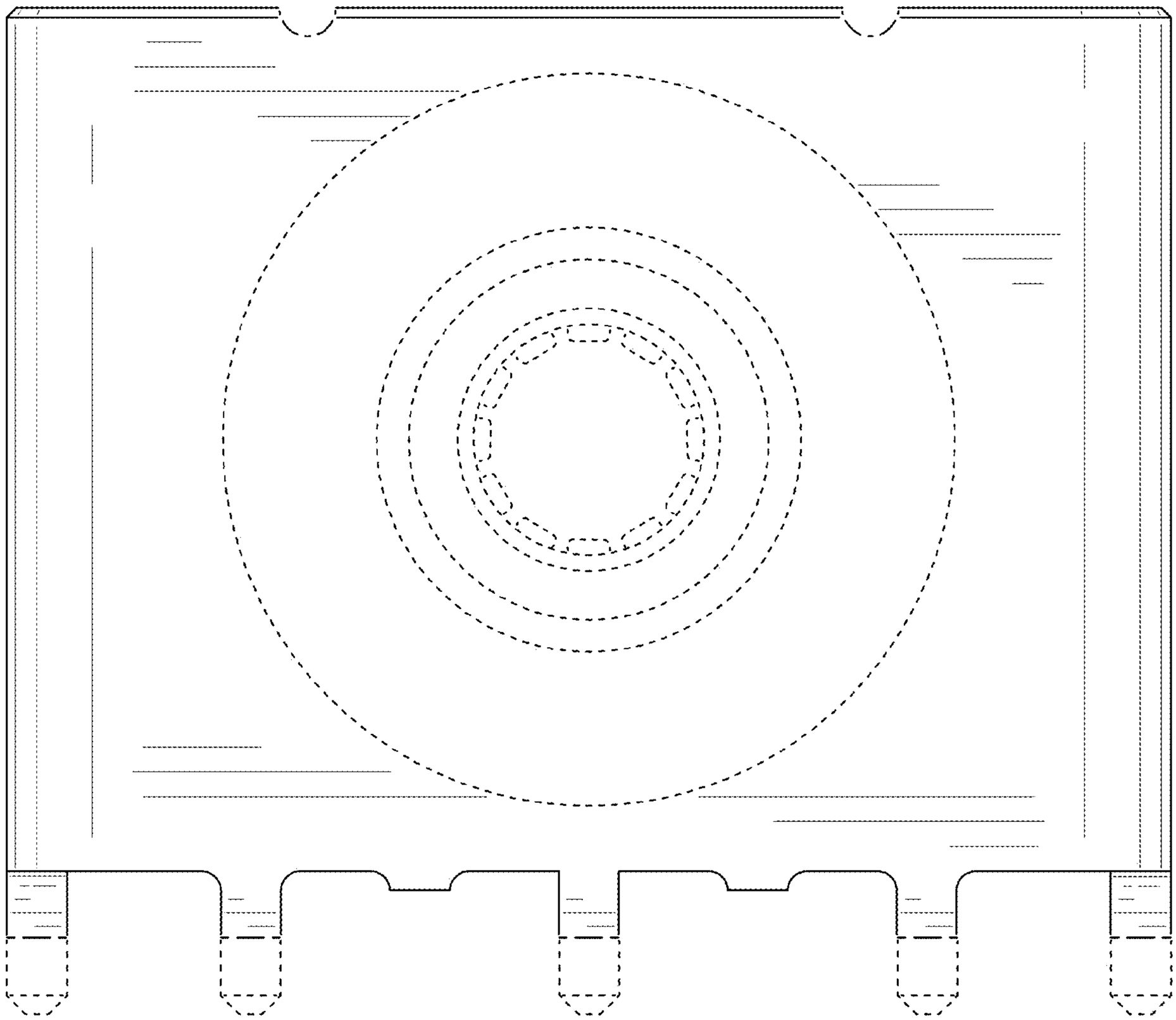

FIG. 3

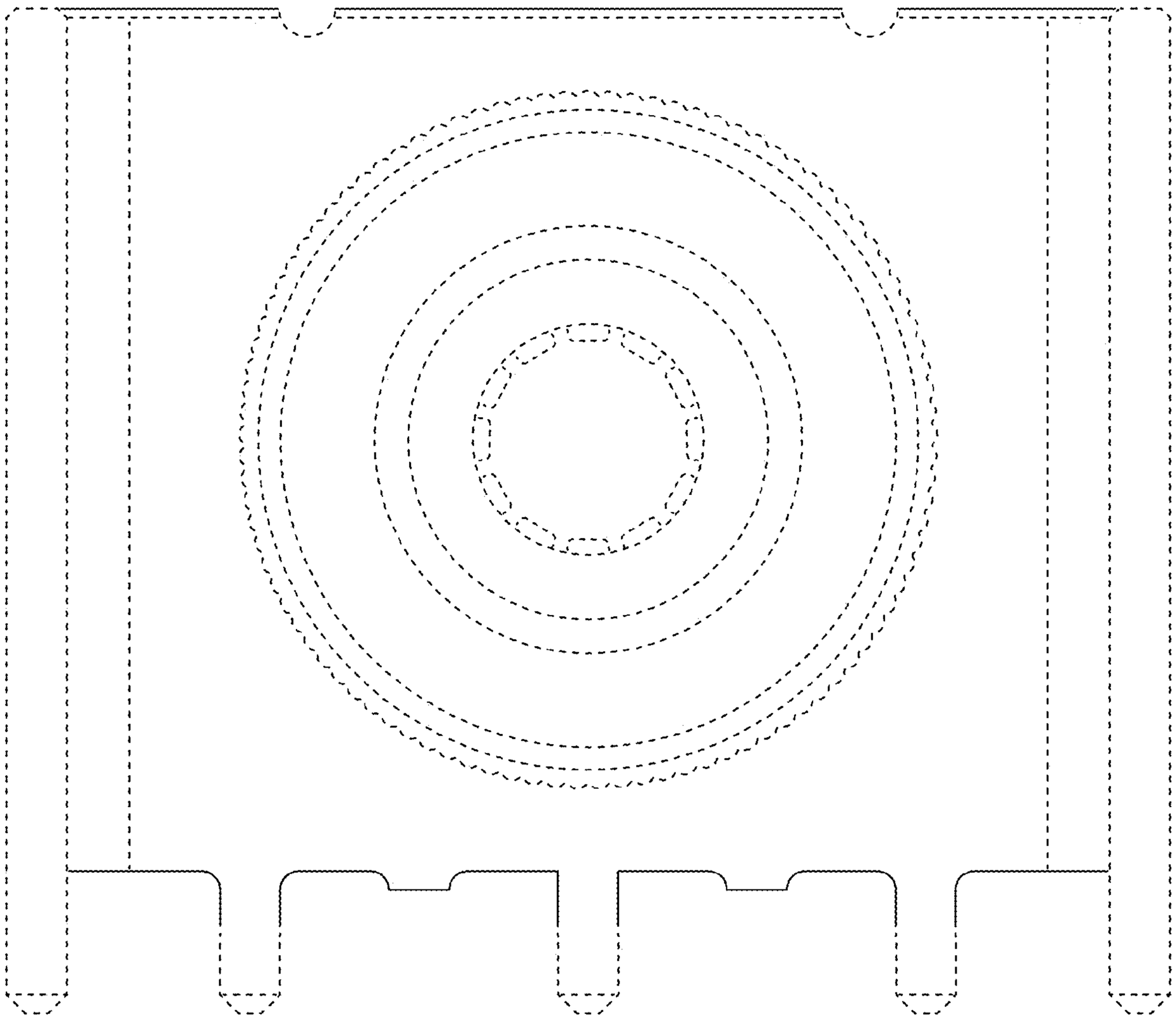

FIG. 4

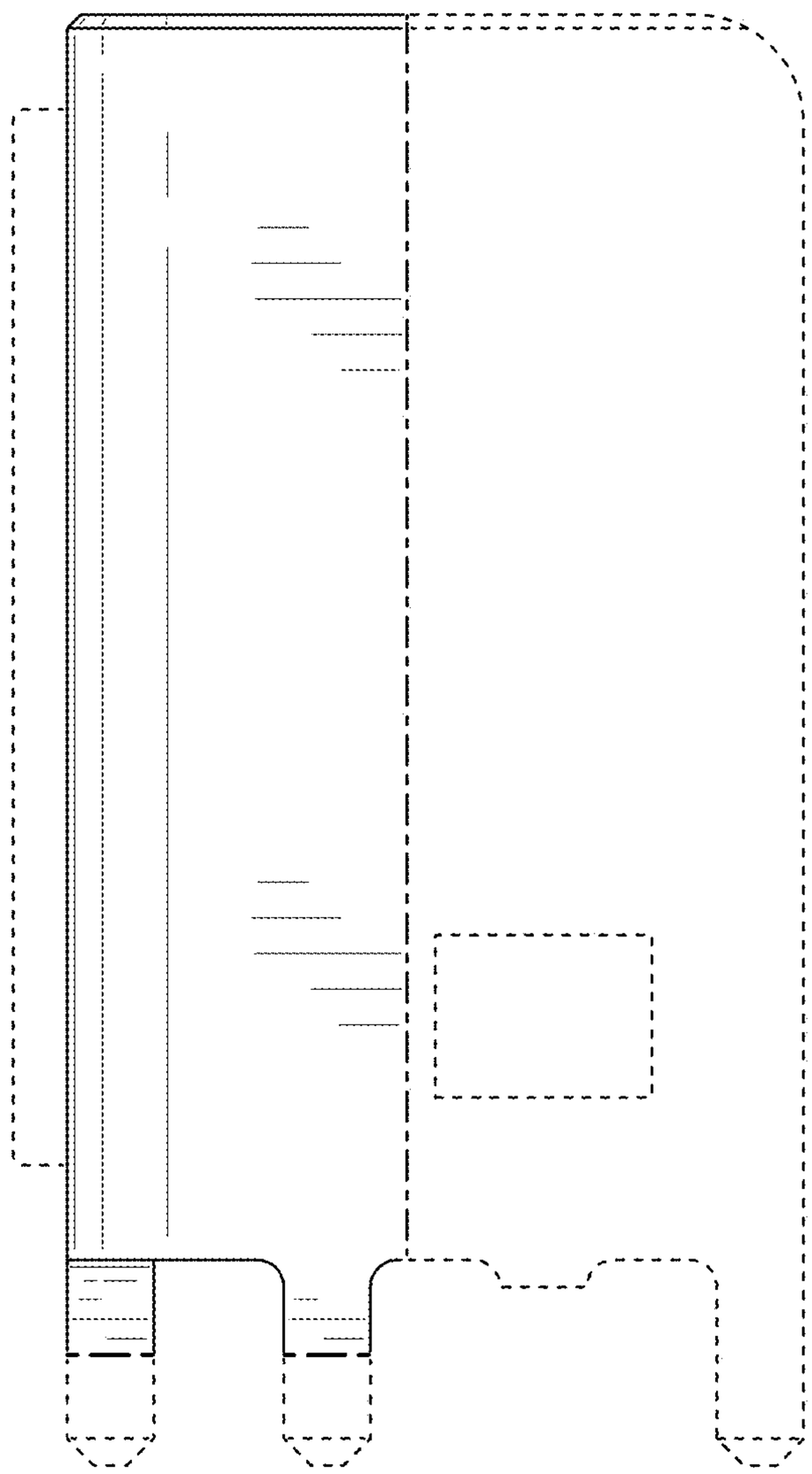

FIG. 5

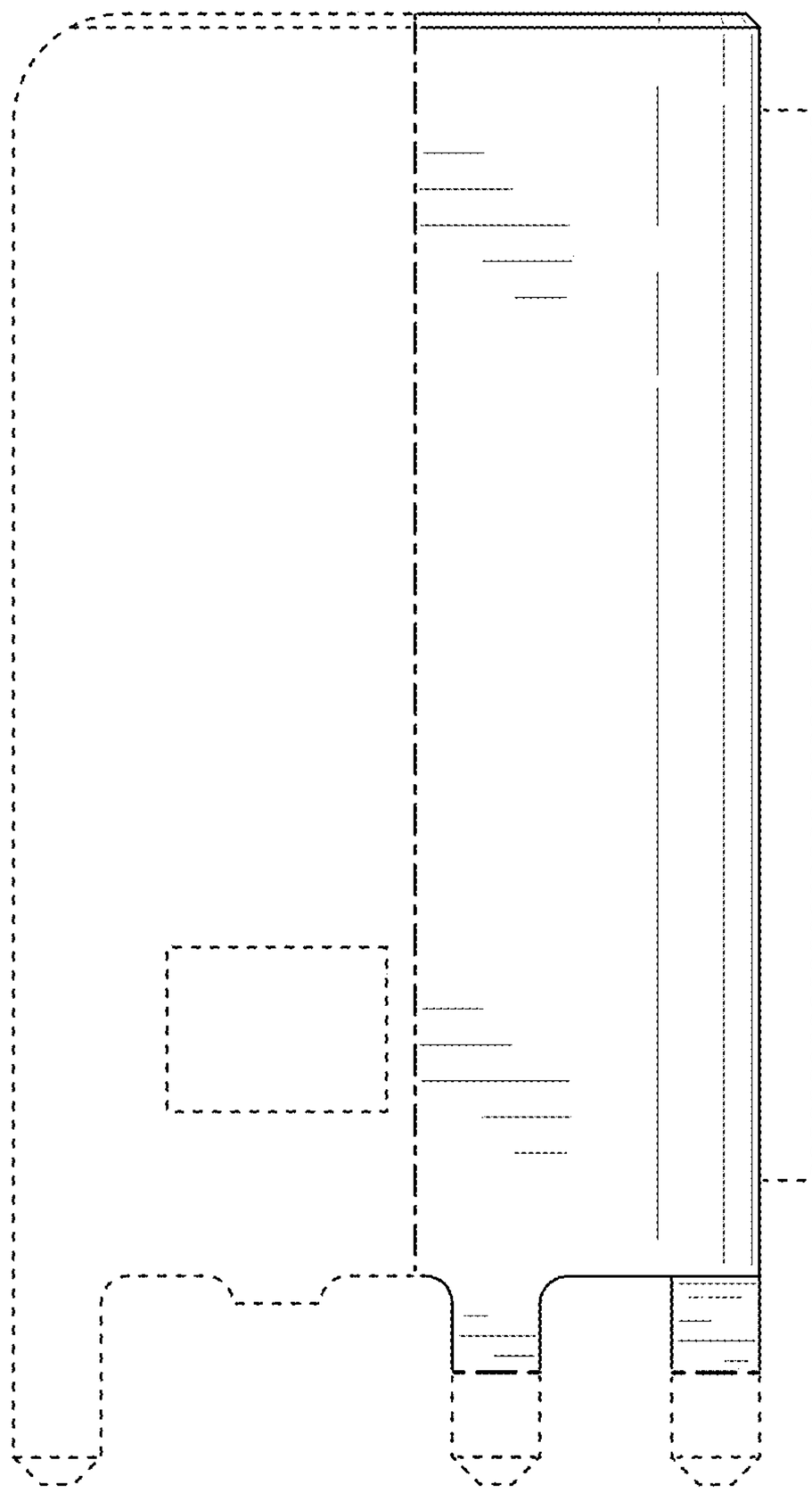

FIG. 6

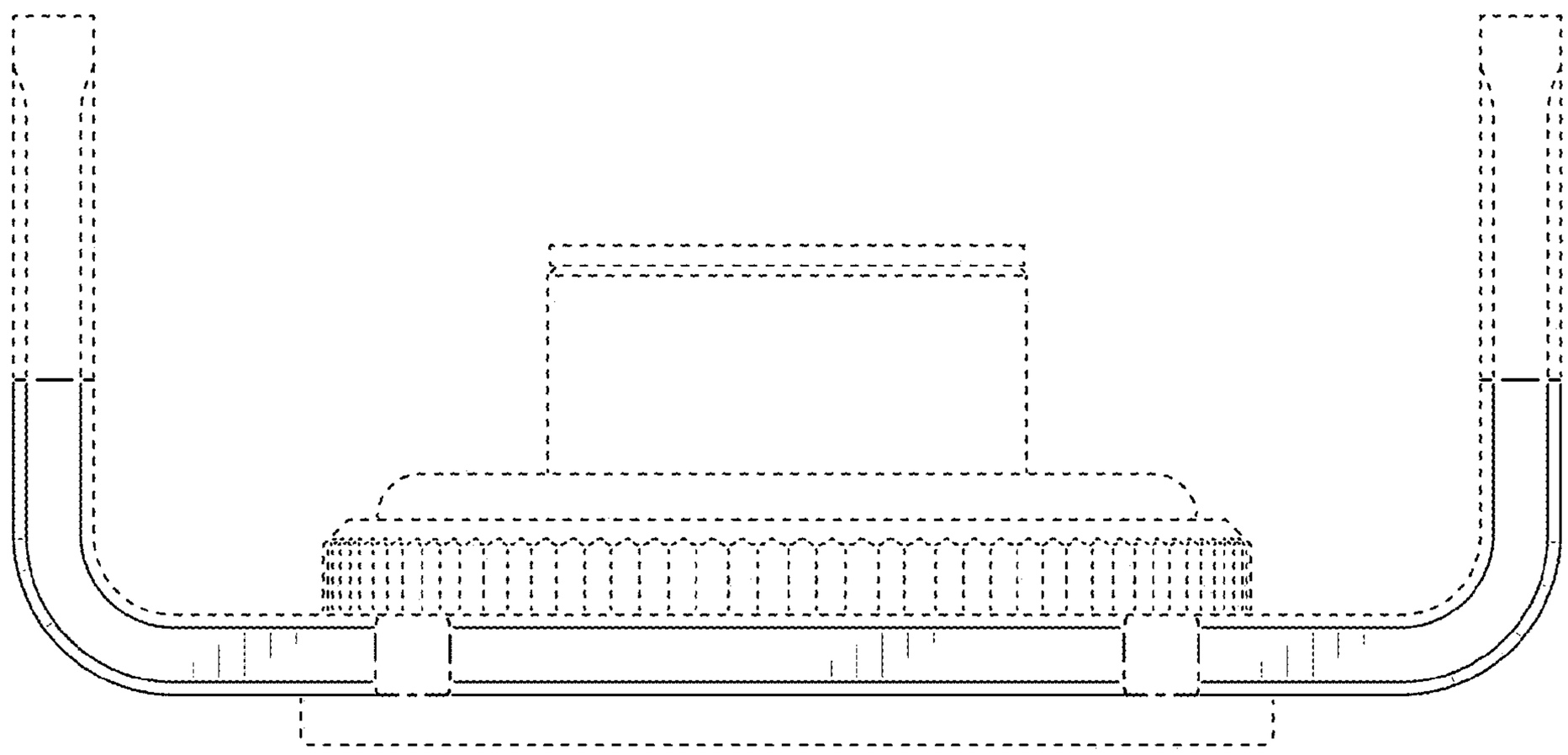

FIG. 7

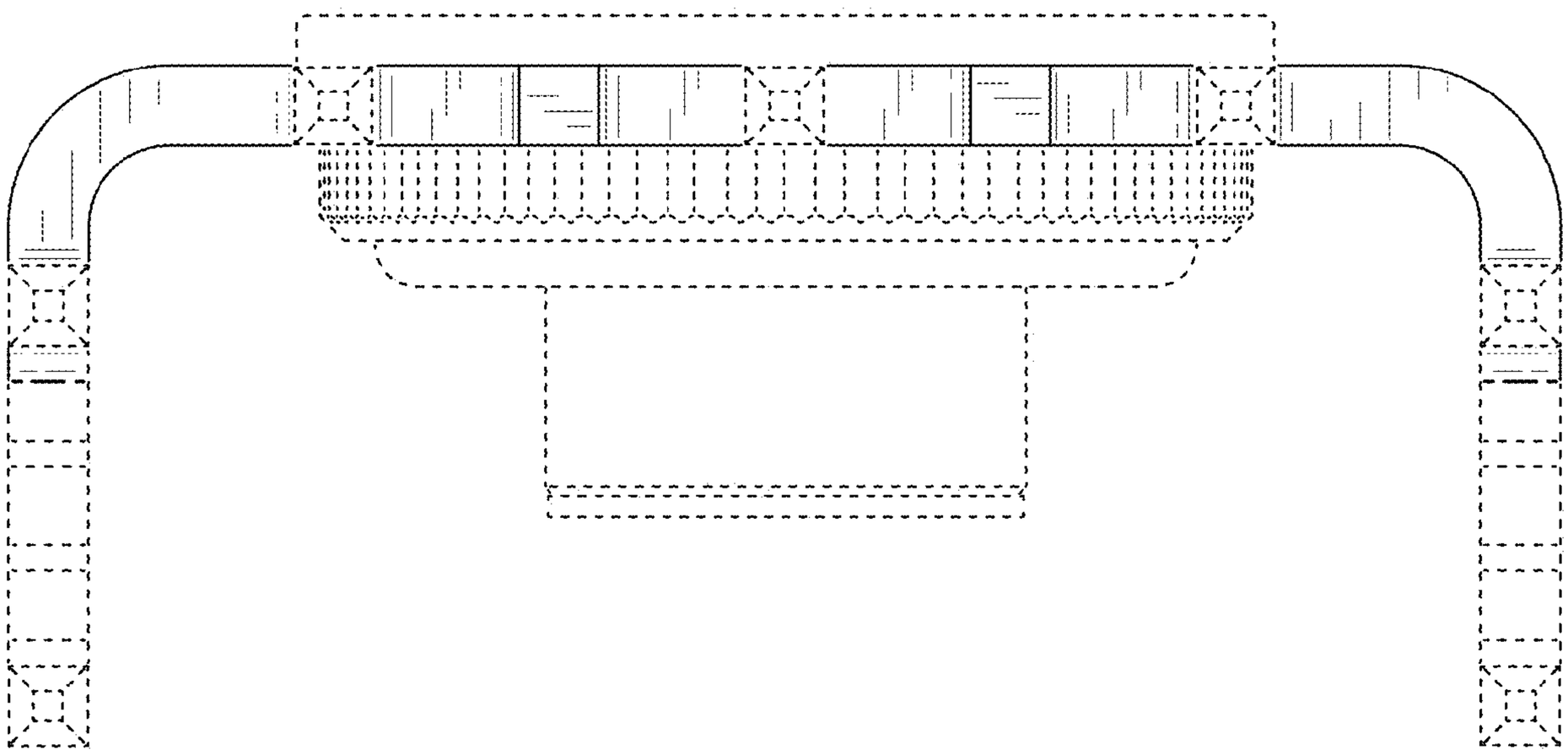

FIG. 8