US0D1041221S

(12) United States Design Patent

Shi

(10) Patent No.: US D1,041,221 S
(45) Date of Patent: ** Sep. 10, 2024

(54) **JUICE DISPENSER ASSEMBLY**

(71) Applicant: **Xiangmeng Shi**, Shenzhen (CN)

(72) Inventor: **Xiangmeng Shi**, Shenzhen (CN)

(**) Term: **15 Years**

(21) Appl. No.: **29/882,478**

(22) Filed: **Jan. 15, 2023**

(51) **LOC (14) Cl.** **07-01**

(52) **U.S. Cl.**
USPC **D7/300.1**; D7/510

(58) **Field of Classification Search**
USPC D7/400, 507, 509–511, 514, 527, 533, D7/536, 534, 543, 300.1, 300.2, 303, D7/619.1, 391, 392.1, 396.1, 396.2, 629, D7/900; D9/503, 435, 531; D3/202
CPC A63F 2009/0058; A47G 19/2205; A47G 21/18; A47J 41/00; B65D 1/00
See application file for complete search history.

(56) **References Cited**

U.S. PATENT DOCUMENTS

D563,791	S	*	3/2008	Kleckauskas	D9/531
D651,854	S	*	1/2012	Cabados	D7/532
D686,501	S	*	7/2013	Maas	D9/531
D793,164	S	*	8/2017	Charlton	D7/532
D813,608	S	*	3/2018	Spivey	D7/533
D853,784	S	*	7/2019	Wu	D7/392.1
D872,534	S	*	1/2020	Peng	D7/532
D881,647	S	*	4/2020	Wang	D9/531
D886,527	S	*	6/2020	Huang	D9/540
D912,518	S	*	3/2021	Peng	D9/531
D923,399	S	*	6/2021	Egorov	D7/396.2
D948,342	S	*	4/2022	Wadsworth	D9/531

(Continued)

FOREIGN PATENT DOCUMENTS

CN	305423499	*	11/2019
CN	307861784	*	2/2023

(Continued)

OTHER PUBLICATIONS

Rzipid [online] URL: https://www.amazon.com/Portable-Rzipid-Smoothies-Rechargeable-Personal-Size/dp/B0C4KR4KYL (site visited: Apr. 26, 2024) (Year: 2023).*

(Continued)

Primary Examiner — Michael C Stout
Assistant Examiner — Tia Ruth-Renee Polidori
(74) *Attorney, Agent, or Firm* — Daniel M. Cohn; Howard M. Cohn

(57) **CLAIM**

The ornamental design for a juice dispenser assembly, as shown and described.

DESCRIPTION

FIG. **1** is an exploded top perspective view my new design for a juice dispenser assembly, shown with a first lid and second lid separated from the jug for clarity of disclosure;
FIG. **2** is an exploded bottom perspective view thereof;
FIG. **3** is an exploded front elevational view thereof;
FIG. **4** is an exploded rear elevational view thereof;
FIG. **5** is an exploded left side elevational view thereof;
FIG. **6** is an exploded right side elevational view thereof;
FIG. **7** is an exploded top plan view thereof;
FIG. **8** is an exploded bottom plan view thereof;
FIG. **9** is a top perspective view of my new design for a juice dispenser assembly shown in isolation with a first lid attached to a jug in a closed configuration; and,
FIG. **10** is a top perspective view of my new design for a juice dispenser assembly shown in isolation with a second lid attached to a jug in a closed configuration.
The dash-dash broken lines in the drawings depict portions of the juice dispenser assembly that form no part of the claimed design.

1 Claim, 10 Drawing Sheets

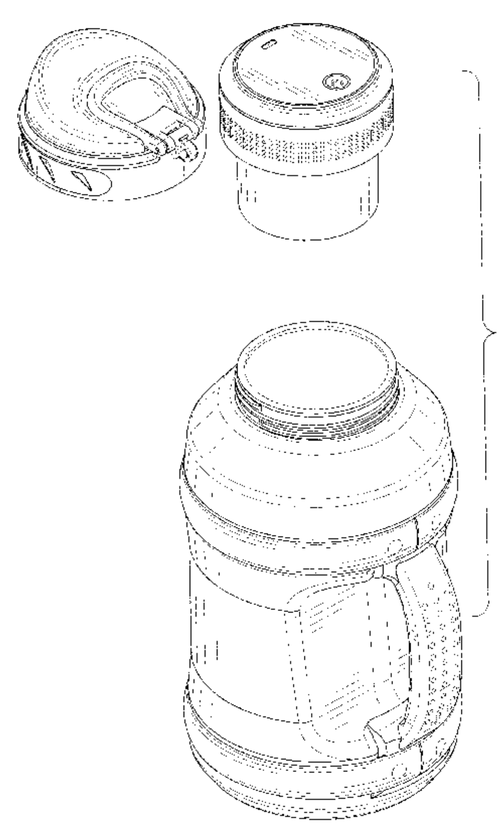

(56) **References Cited**

U.S. PATENT DOCUMENTS

D951,713	S	*	5/2022	Qiu	D7/510
D962,705	S	*	9/2022	Zhou	D7/510
D997,730	S	*	9/2023	Wadsworth	D9/531
D1,005,773	S	*	11/2023	Egorov	D7/392.1

FOREIGN PATENT DOCUMENTS

CN	307944274	*	3/2023
CN	308211688	*	9/2023
CN	308211695	*	9/2023
CN	308217028	*	9/2023
CN	308262072	*	10/2023
CN	308287531	*	10/2023
CN	308588842	*	4/2024
GB	6255352	*	1/2023

OTHER PUBLICATIONS

Gazechimp [online] URL: https://www.amazon.com/gazechimp-Portable-Rechargeable-Watermelon-Multifunctional/dp/B0CJCNS2HV?th=1 (site visited: Apr. 26, 2024) (Year: 2023).*

Atyhao [online] URL: https://www.amazon.co.uk/Atyhao-Portable-Blender-18000rpm-TravelBlender/dp/B0CPMDN6PC (site visited: Apr. 26, 2024) (Year: 2023).*

Shein [online] URL: https://eur.shein.com/1pc-2500-ML-Letter-Graphic-Water-Bottle-Simple-Portable-Sports-Water-Bottle-For-Outdoor-p-14835321-cat-3227.html (site visited: Apr. 26, 2024) (Year: 2023).*

Feekaa [online] URL: https://www.amazon.com/Personal-Smoothies-Portable-Rechargeable-Waterproof/dp/B0CSB6MCH6 (site visited: Apr. 26, 2024) (Year: 2024).*

Global sources [online] URL: https://www.globalsources.com/Electric-press/portable-juicer-blender-1198353341p.htm (site visited: Apr. 26, 2024) (Year: 2024).*

* cited by examiner

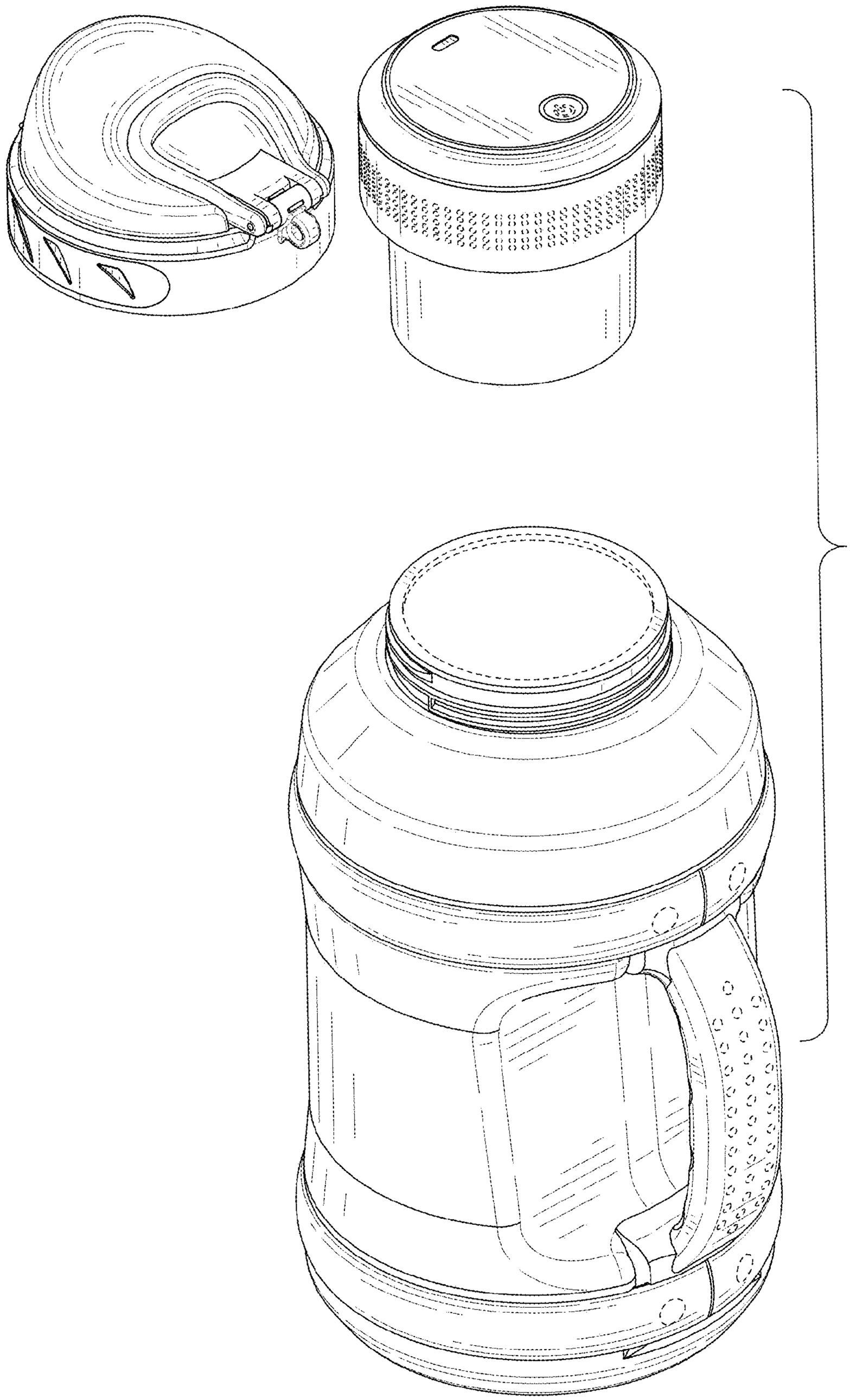

FIG. 1

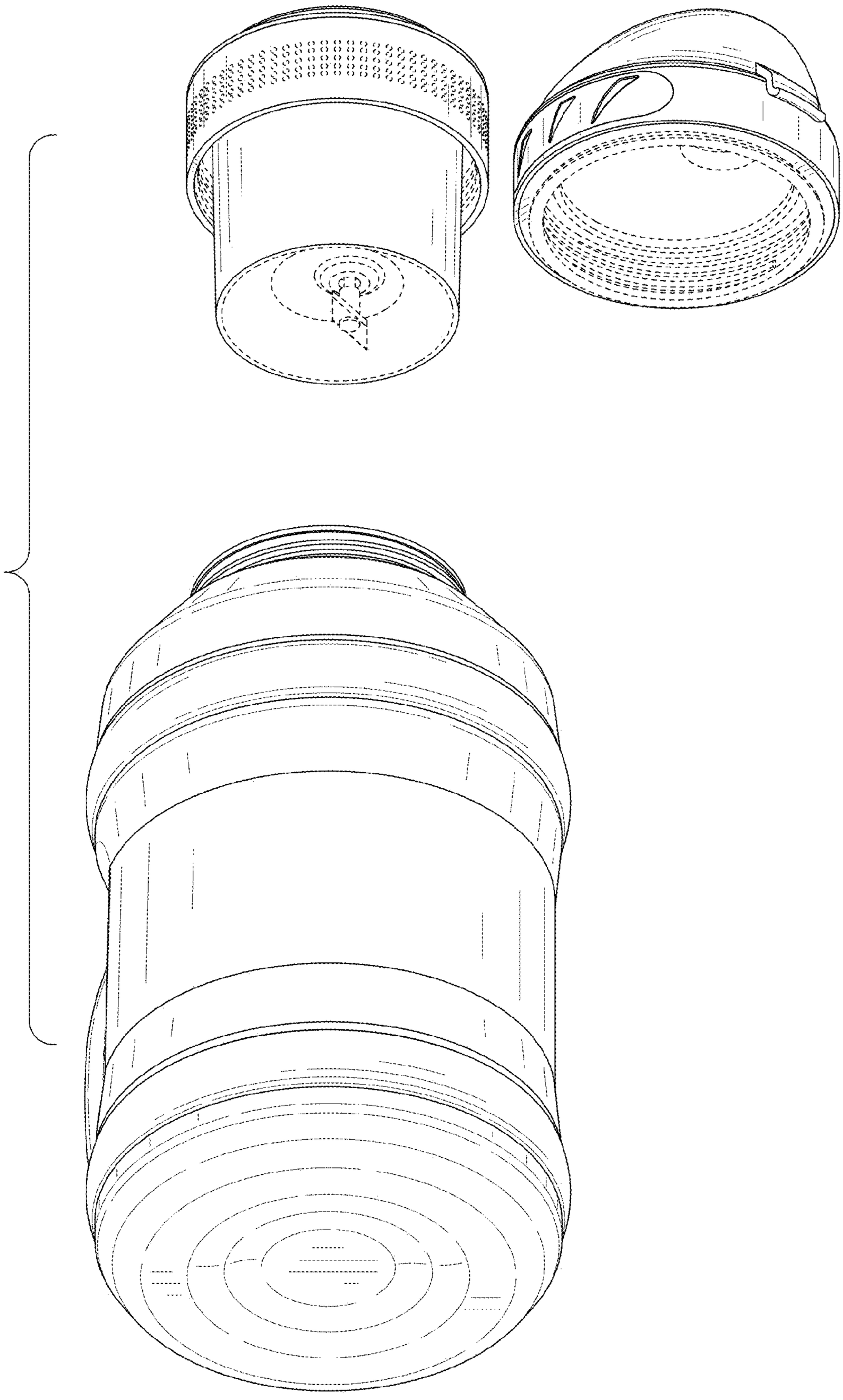

FIG. 2

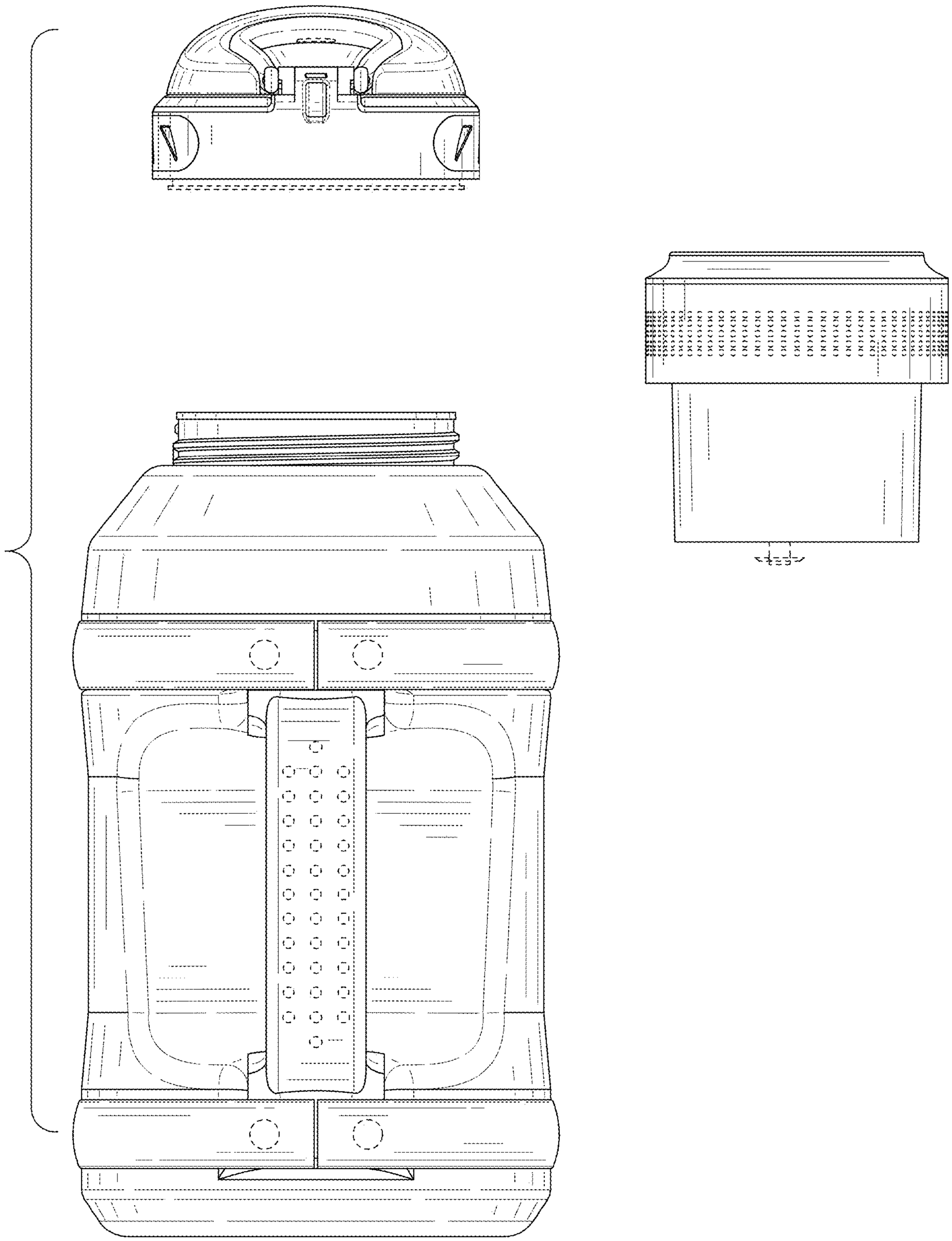

FIG. 3

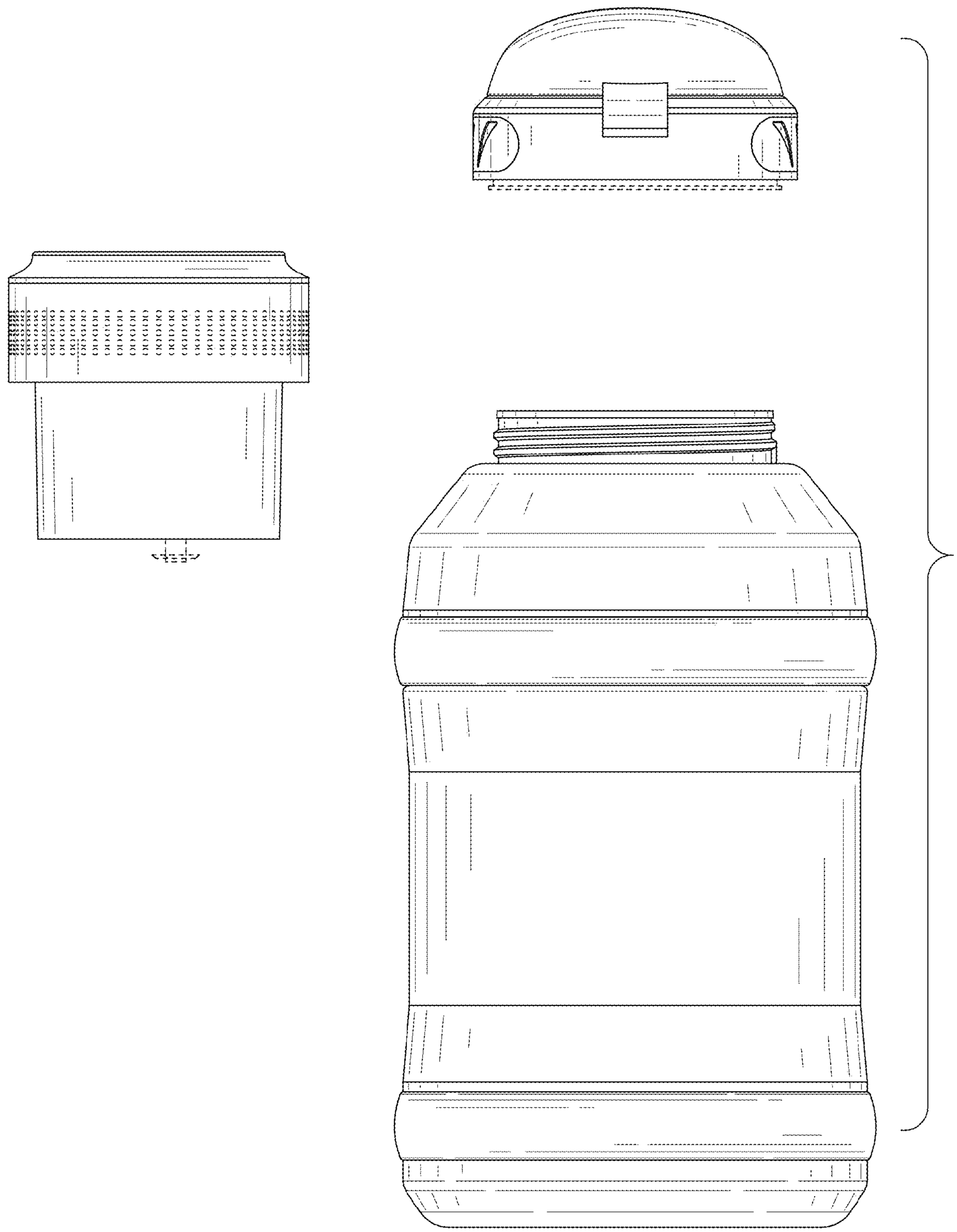

FIG. 4

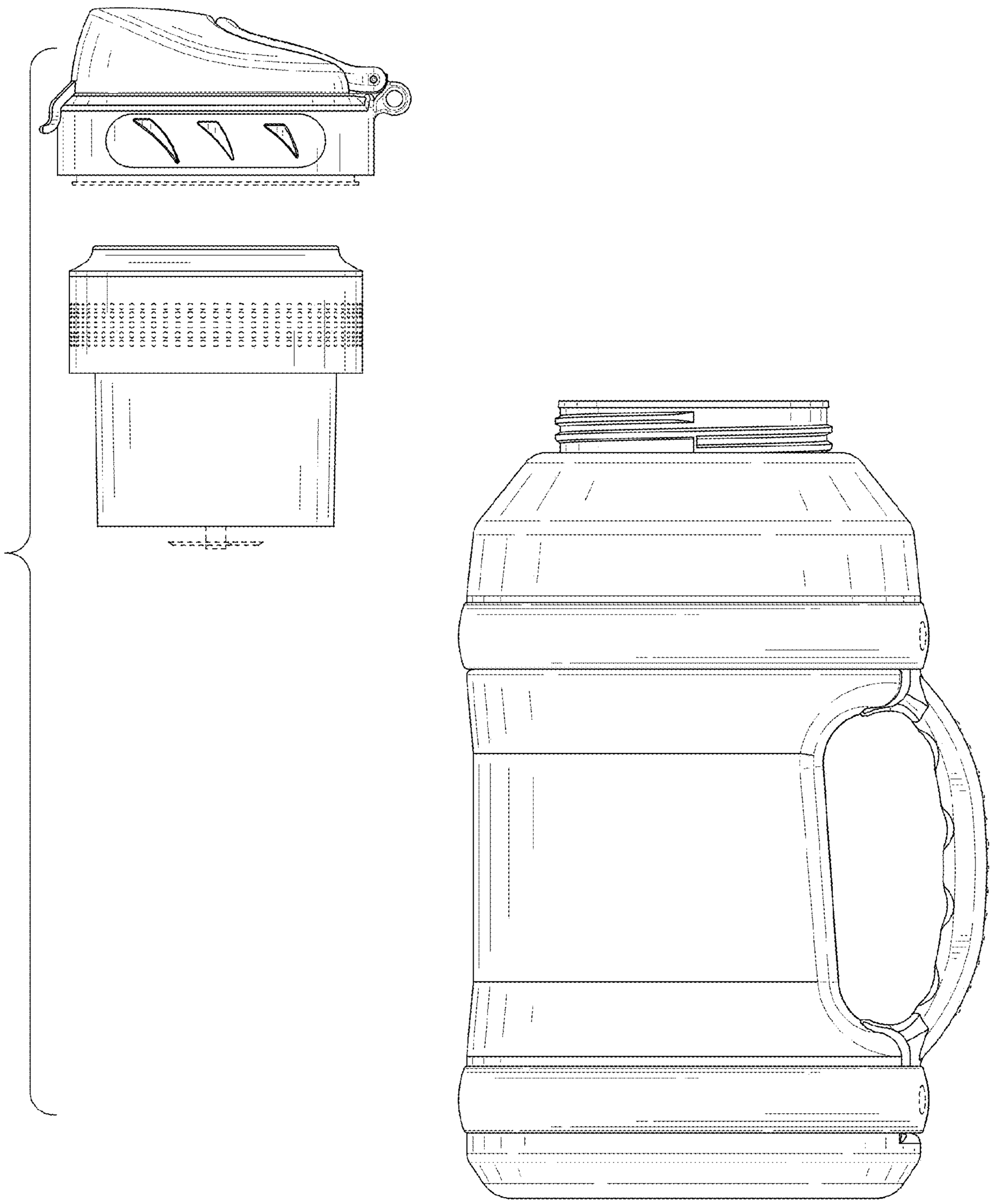

FIG. 5

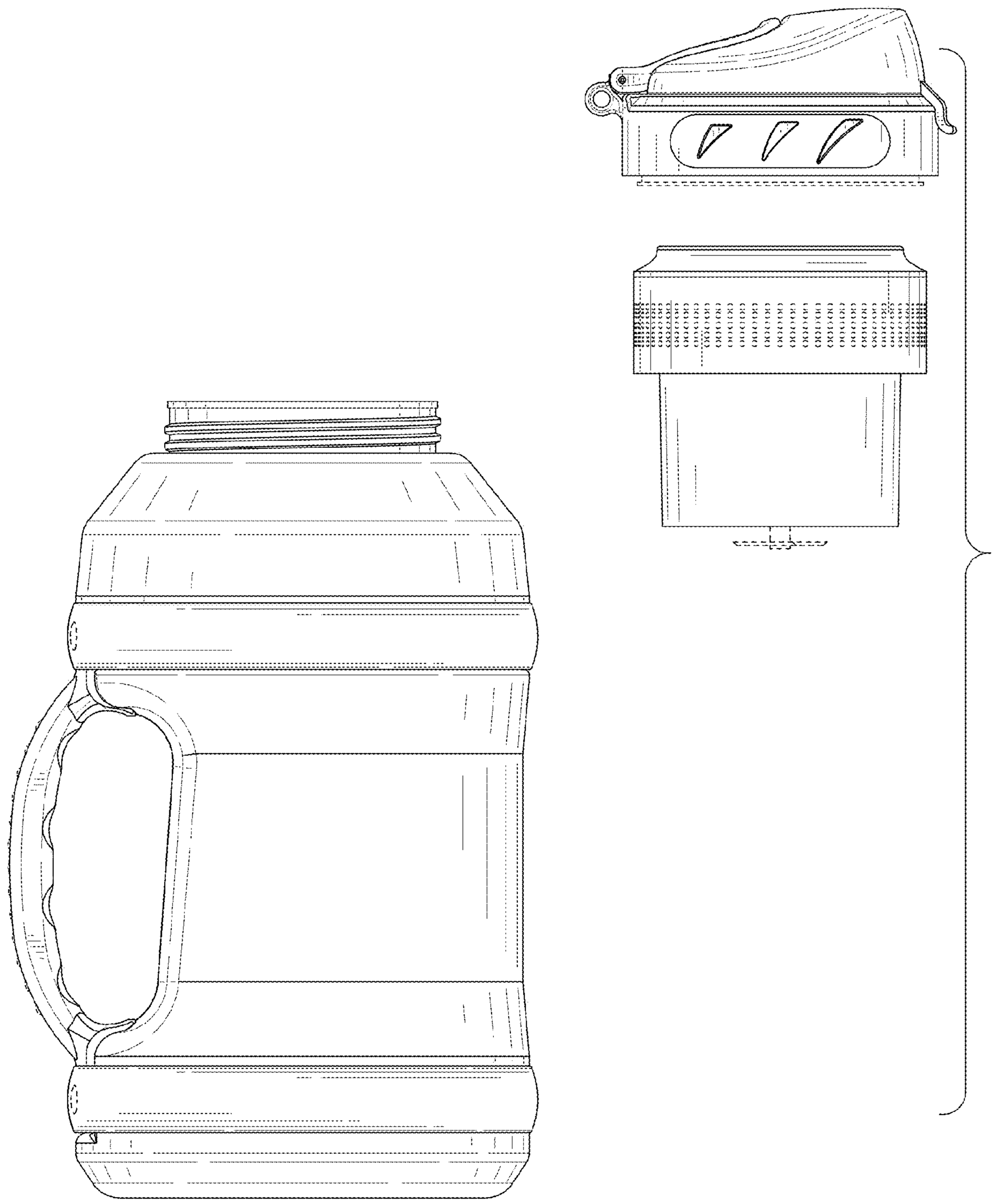

FIG. 6

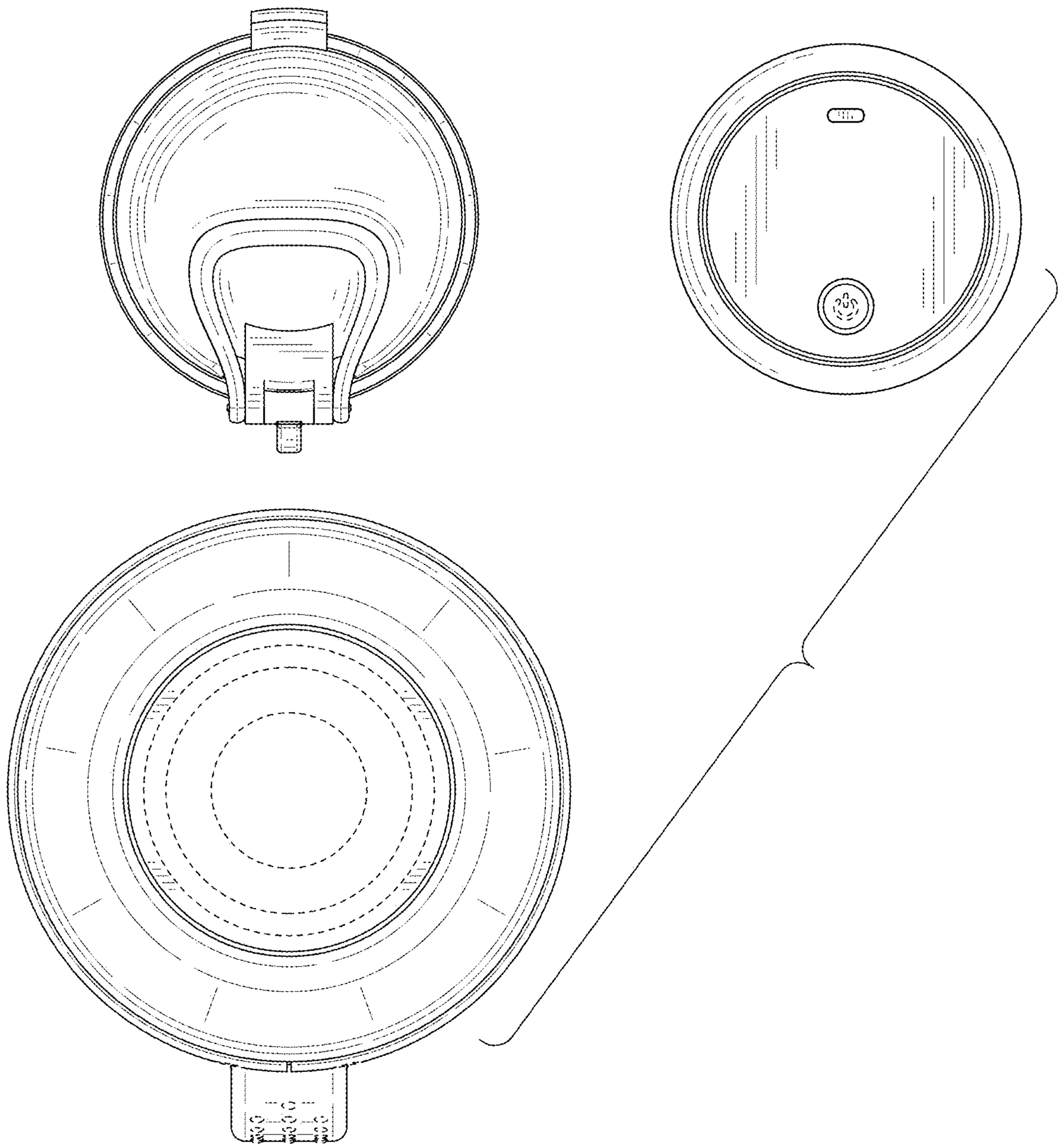

FIG. 7

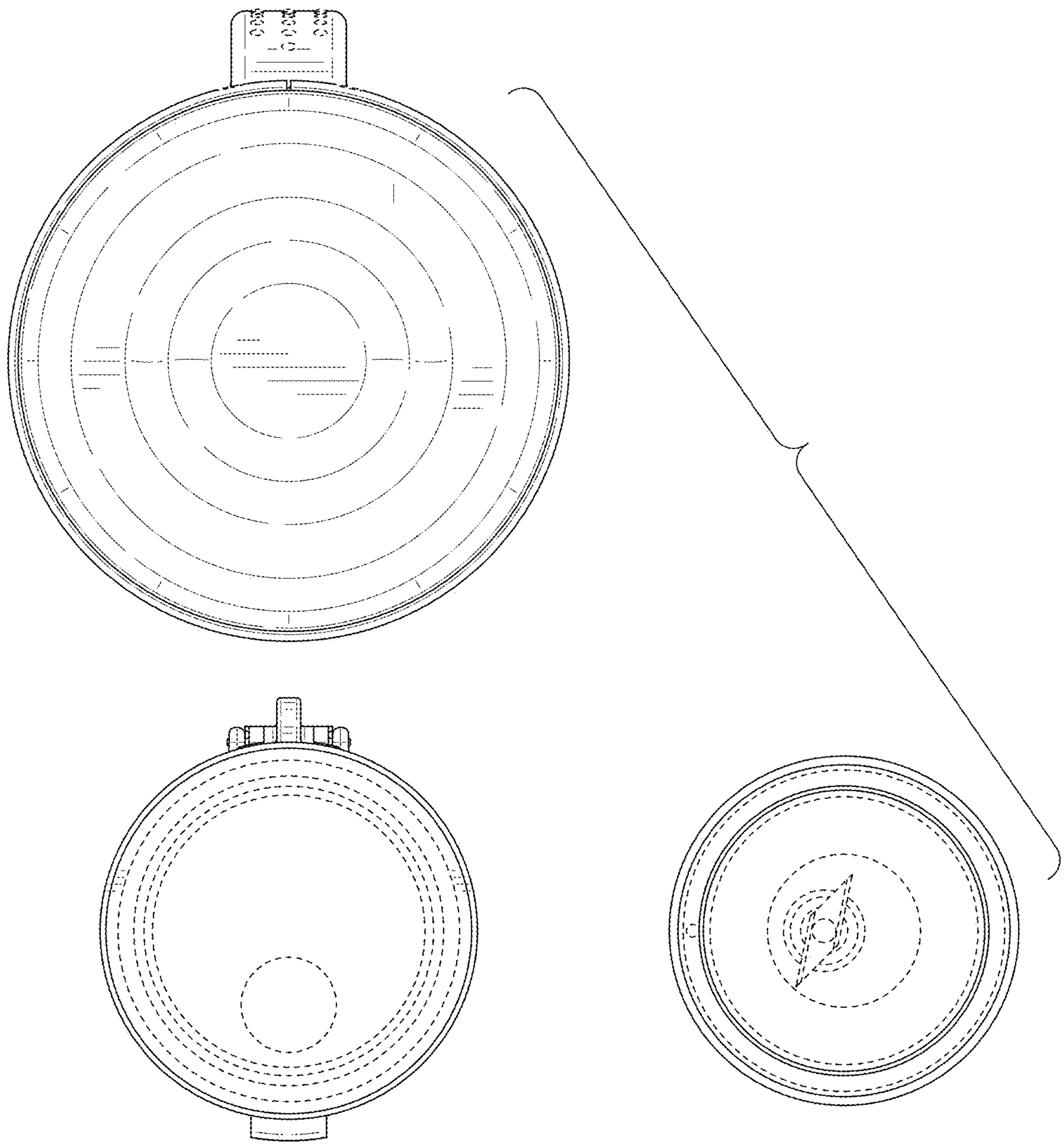

FIG. 8

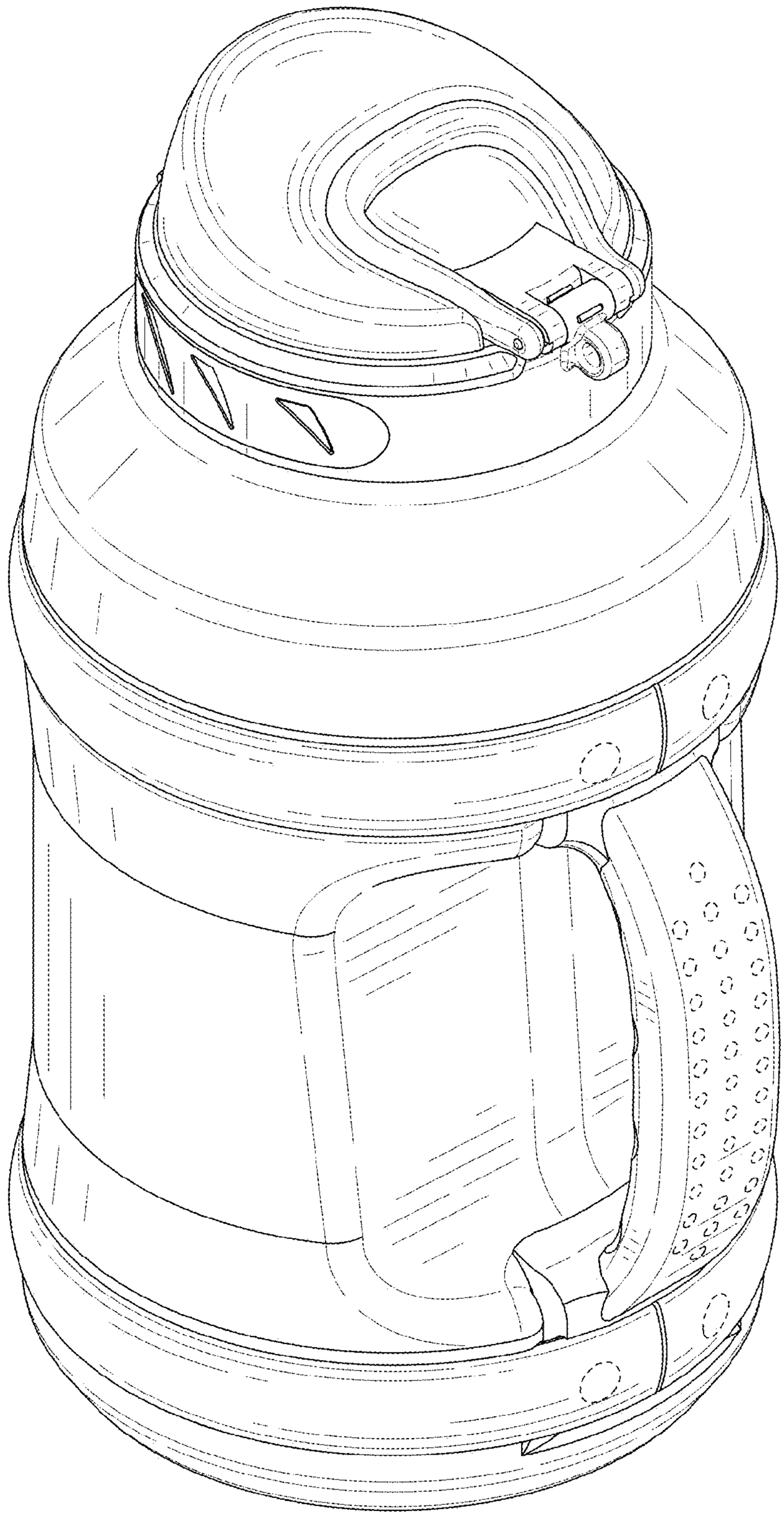

FIG. 9

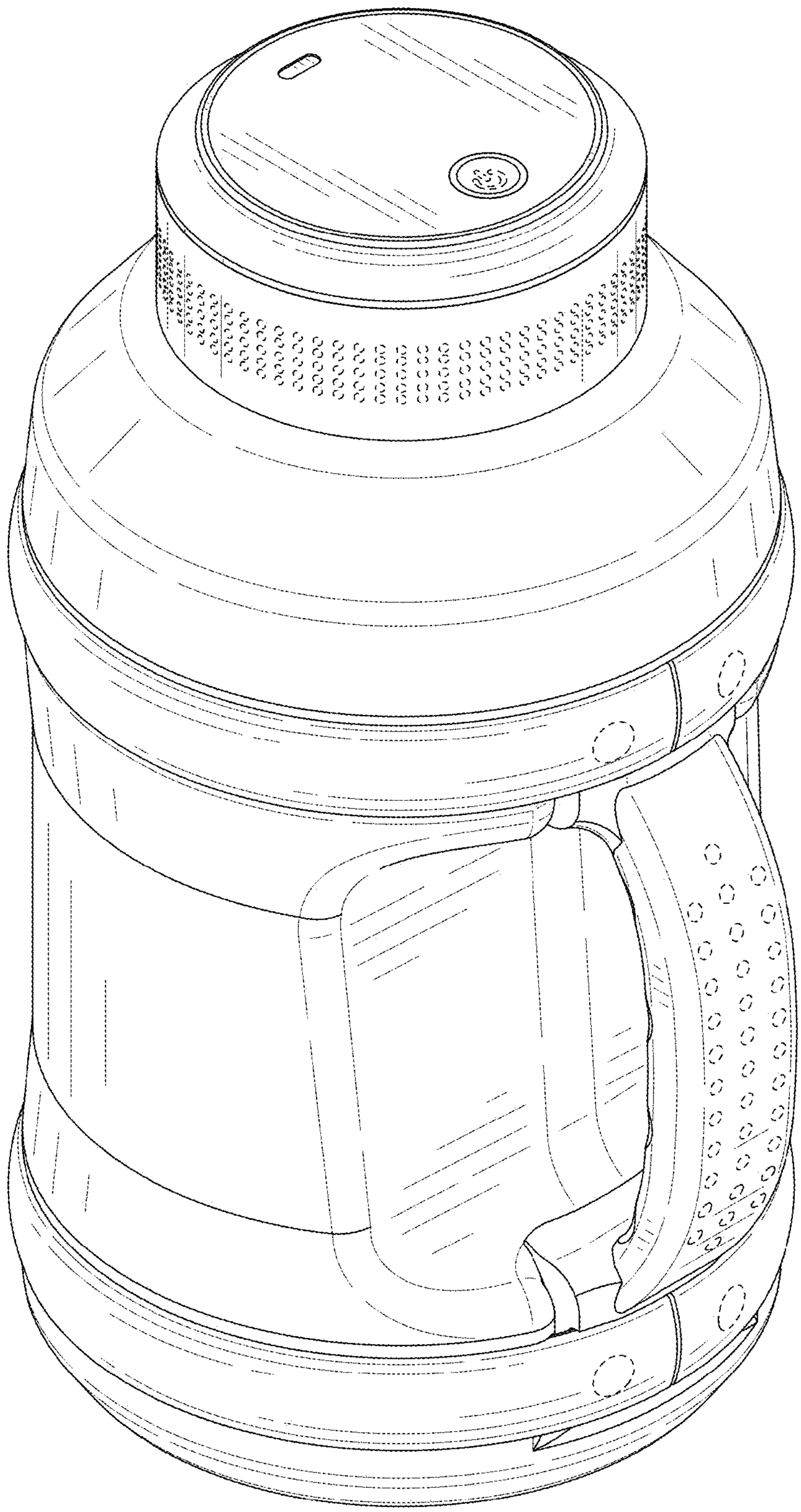

FIG. 10