US0D1026164S

(12) United States Design Patent

Yoo et al.

(10) Patent No.: US D1,026,164 S
(45) Date of Patent: ** May 7, 2024

(54) **HOLDER FOR FISHING TACKLE**

(71) Applicants: **Young Joon Yoo**, Yongin-si (KR); **Ji Seung Yoo**, Yongin-si (KR)

(72) Inventors: **Young Joon Yoo**, Yongin-si (KR); **Ji Seung Yoo**, Yongin-si (KR)

(**) Term: **15 Years**

(21) Appl. No.: **35/517,630**

(22) Filed: **Jun. 29, 2022**

(80) **Hague Agreement Data**

Int. Filing Date: **Jun. 29, 2022**
Int. Reg. No.: **DM/223734**
Int. Reg. Date: **Jun. 29, 2022**
Int. Reg. Pub. Date: **Jun. 30, 2023**

(51) **LOC (14) Cl.** **22-05**

(52) **U.S. Cl.**
USPC **D22/134**; D22/147

(58) **Field of Classification Search**
USPC D22/134, 139, 147–149; D6/552–553; D8/396

(Continued)

(56) **References Cited**

U.S. PATENT DOCUMENTS

3,425,150 A * 2/1969 Braese A01K 87/00 43/25.2
4,406,042 A * 9/1983 McPhee F16G 11/103 D22/199

(Continued)

OTHER PUBLICATIONS

https://www.walmart.com/ip/28mm-Hole-Dia-Lean-Tube-Double-Port-Connector-Pipe-Clamp-Clip/184838530?from=/search (Year: 2016).*

Primary Examiner — Catherine R Oliver-Garcia

(57) **CLAIM**

The ornamental design for a holder for fishing tackle, as shown and described.

DESCRIPTION

1. Holder for fishing tackle
2. Holder for fishing tackle
3. Holder for fishing tackle

1.1 : Perspective
1.2 : Front
1.3 : Back
1.4 : Left
1.5 : Right
1.6 : Top
1.7 : Bottom
1.8 : Reference
1.9 : Reference
1.10 : Enlarged
2.1 : Perspective
2.2 : Front
2.3 : Back
2.4 : Left
2.5 : Right
2.6 : Top
2.7 : Bottom
2.8 : Reference
2.9 : Reference
2.10 : Enlarged
3.1 : Perspective
3.2 : Front
3.3 : Back
3.4 : Left
3.5 : Right
3.6 : Top
3.7 : Bottom
3.8 : Reference
3.9 : Reference
3.10 : Enlarged

The claimed designs are for a holder for fishing tackle, which makes the plural fish hooks be spaced apart at a certain distance horizontally to prevent entanglement by

(Continued)

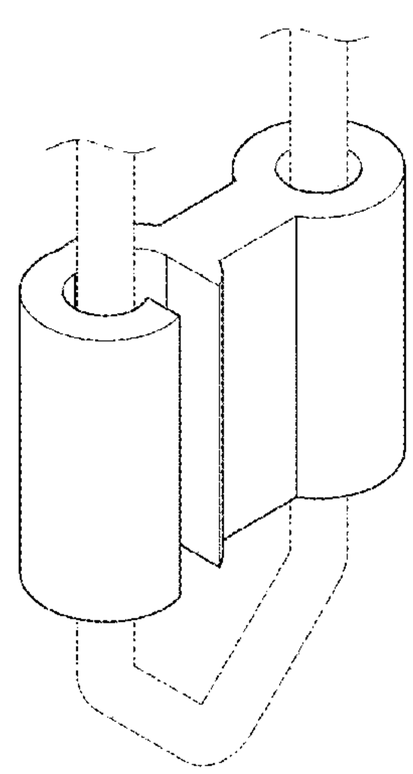

fixing the wire supports of fishing tackle; the wire supports bent and opened wider than the holder in both directions can be inserted and combined with the narrower fixing part of this holder design in order to prevent the wire from being bent back and forth or left and right by the elastic recovery of the wire in both directions and fixation power of the holder, and to make the wire supports be fixed in a stable bent shape; reproductions **1.8**, **2.8**, and **3.8** are reference views showing how to combine and fix the wire support by using the claimed design; reproductions **1.9**, **2.9**, and **3.9** are reference views showing the state in use of the claimed design in which the fishing tackle is completed by fixing the wire supports; reproductions **1.10**, **2.10**, and **3.10** are enlarged views of the claimed design showing a portion of reproductions **1.9**, **2.9**, and **3.9**.

1 Claim, 30 Drawing Sheets

(58) **Field of Classification Search**
CPC A01K 97/06; A01K 97/08; A01K 97/10; Y10S 224/922
See application file for complete search history.

(56) **References Cited**

U.S. PATENT DOCUMENTS

D281,393	S	*	11/1985	Karnhag	D6/552
4,707,892	A	*	11/1987	Nelson	A01K 97/08 24/336
5,331,725	A	*	7/1994	Chou	F16B 2/22 24/339
D402,574	S	*	12/1998	O'Malley	D10/97
6,323,430	B1	*	11/2001	Finona	H01R 9/0518 174/70 R
D465,255	S	*	11/2002	Lankey	D22/139
D614,256	S	*	4/2010	Alley	D22/147
D732,009	S	*	6/2015	Bak	D8/396
D796,344	S	*	9/2017	Paulick	D25/115
D796,946	S	*	9/2017	Pittman	D8/395
10,502,607	B2	*	12/2019	Halliburton	F16B 2/22
D879,261	S	*	3/2020	Nicolia	D23/265
D928,311	S	*	8/2021	McVaney	D24/128
D942,256	S	*	2/2022	Christiansen	D8/394
D1,001,082	S	*	10/2023	Michael	D13/155

* cited by examiner

1.1

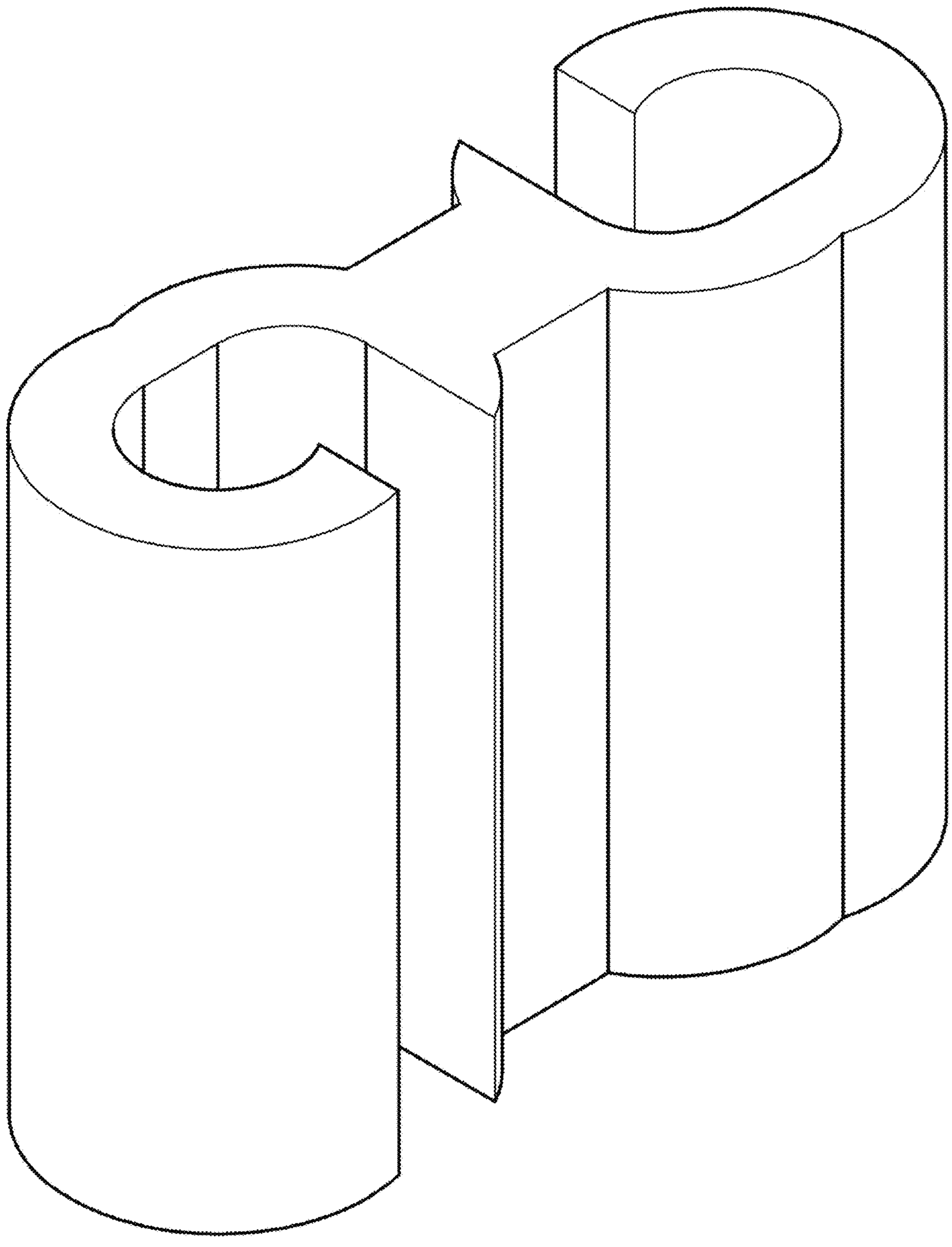

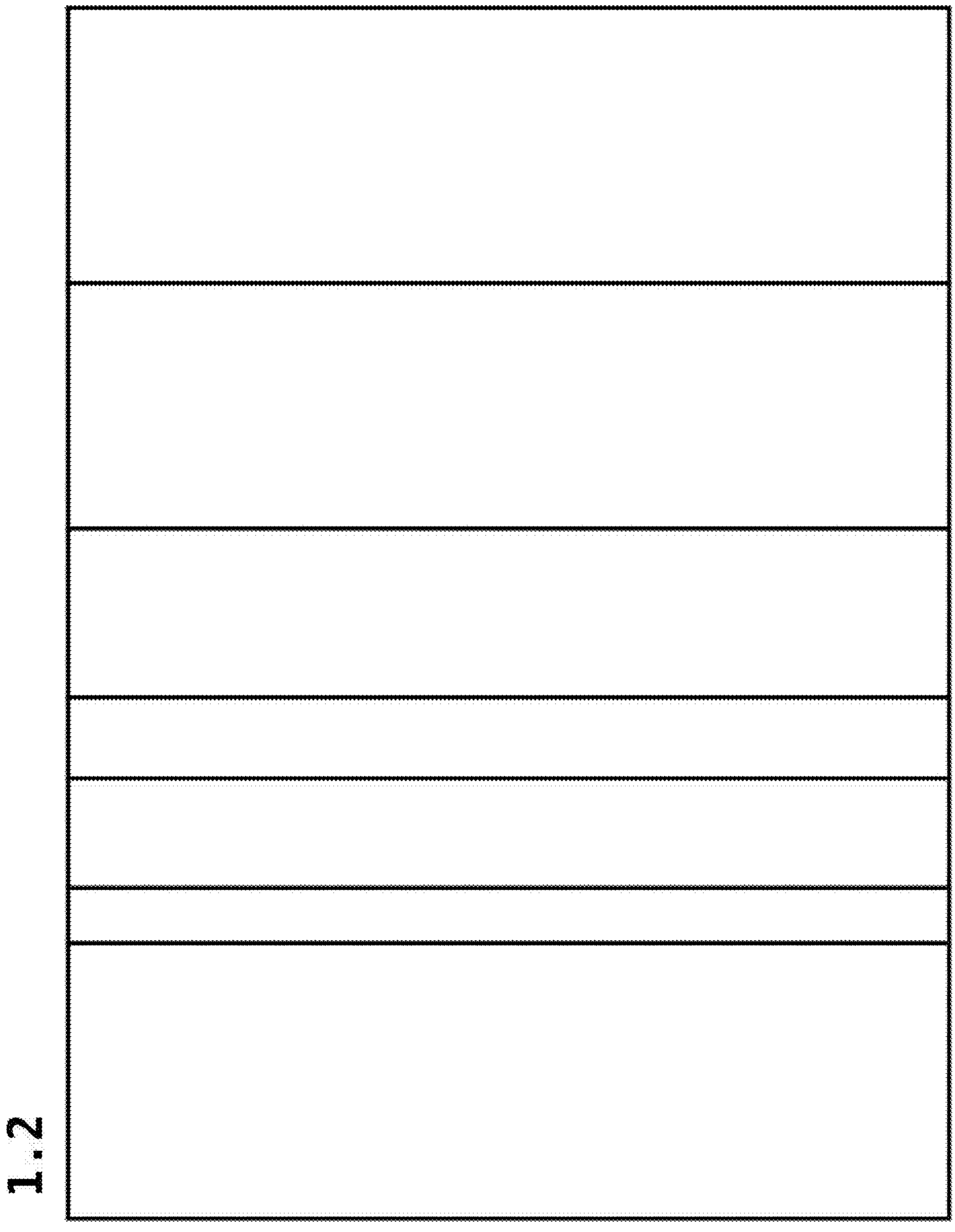
1.2

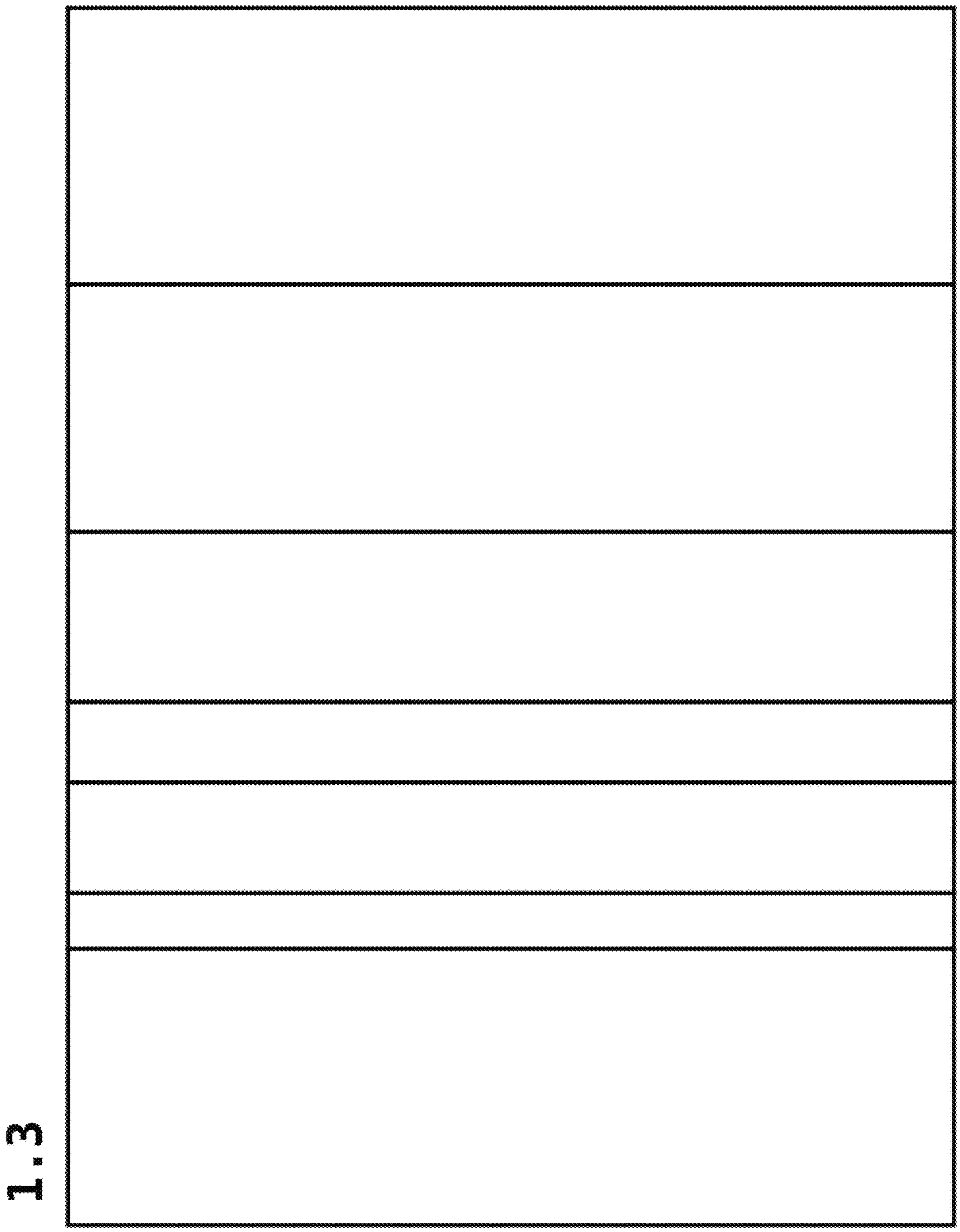
1.3

1.4

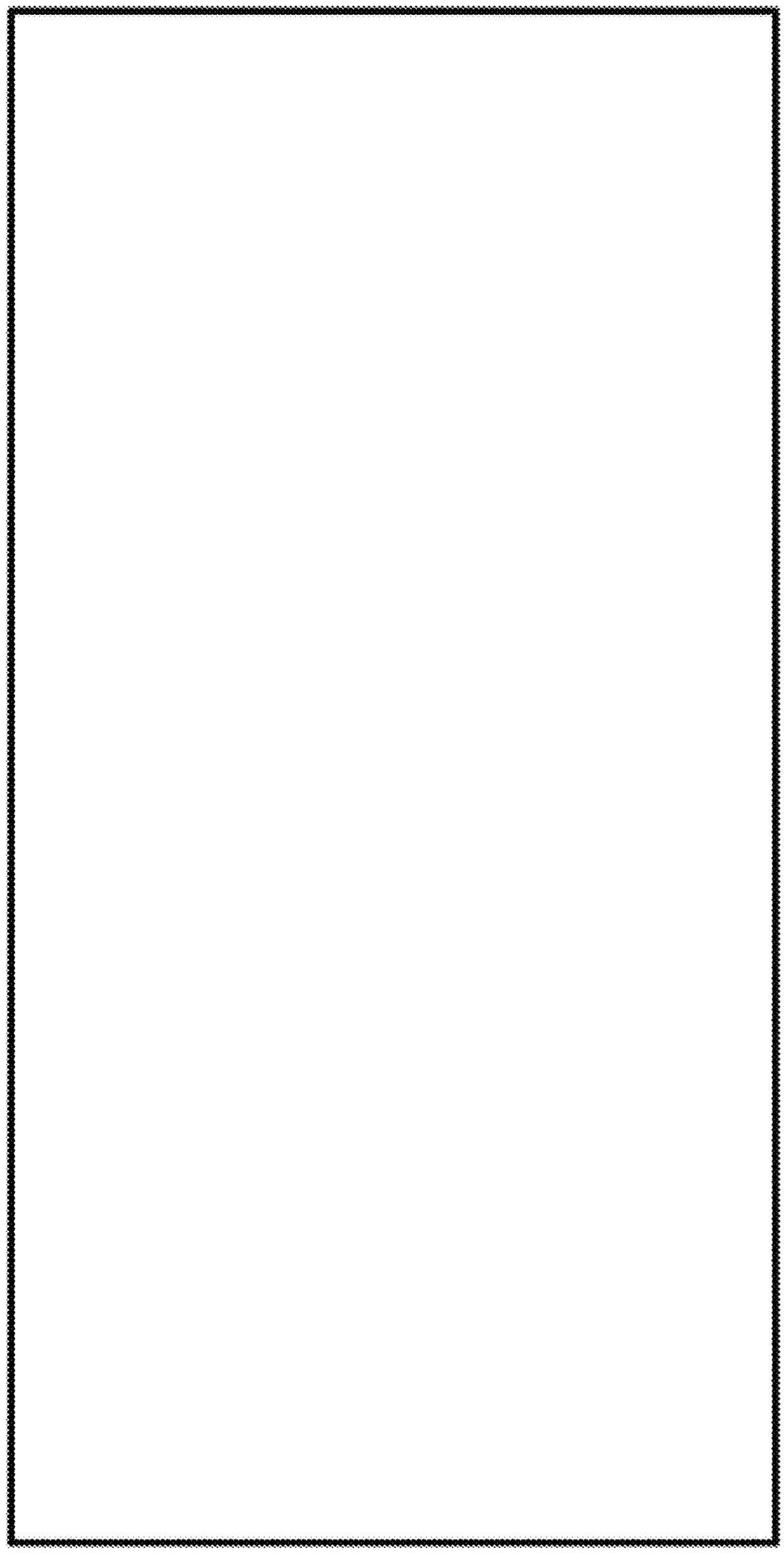

1.5

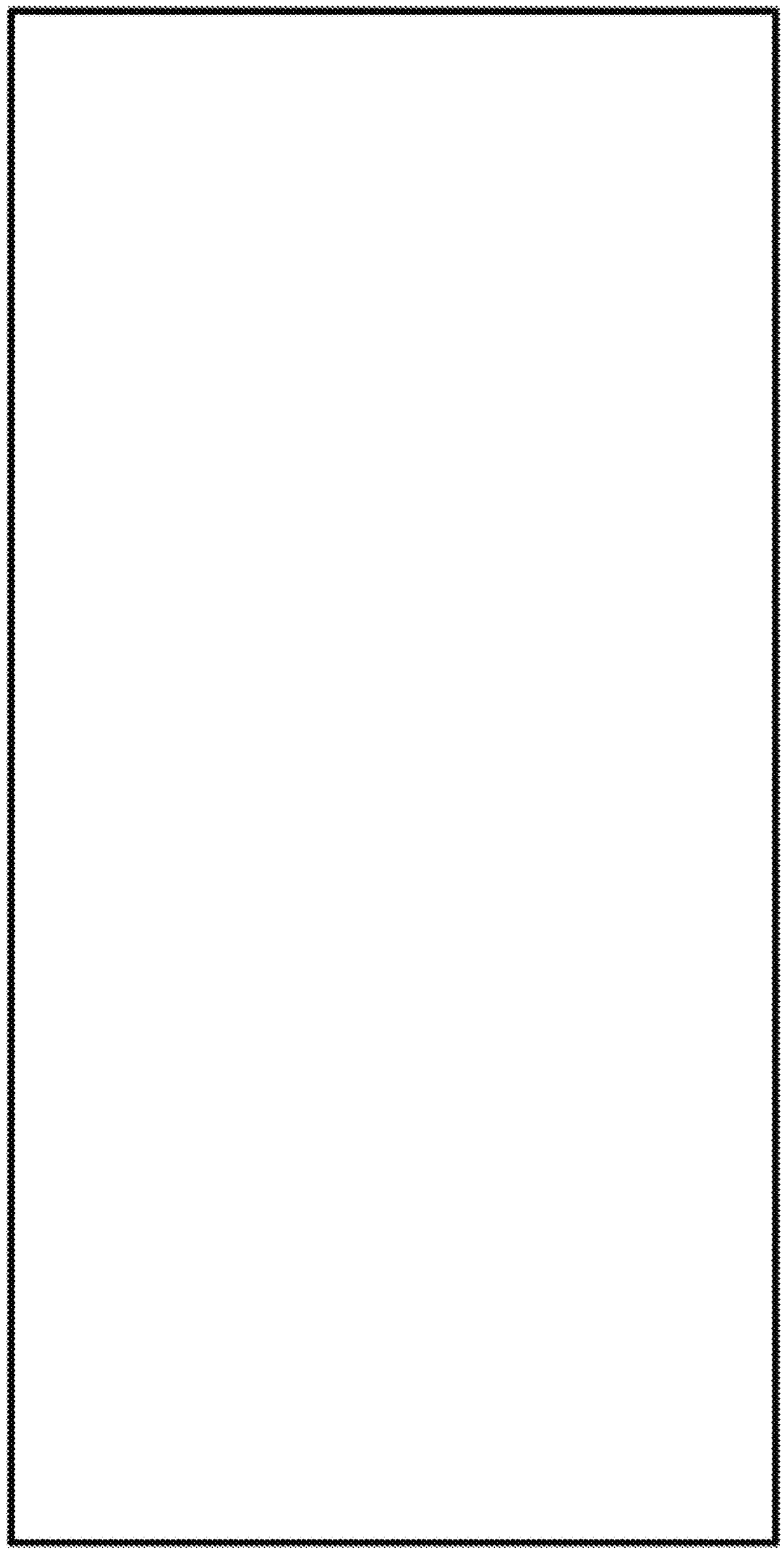

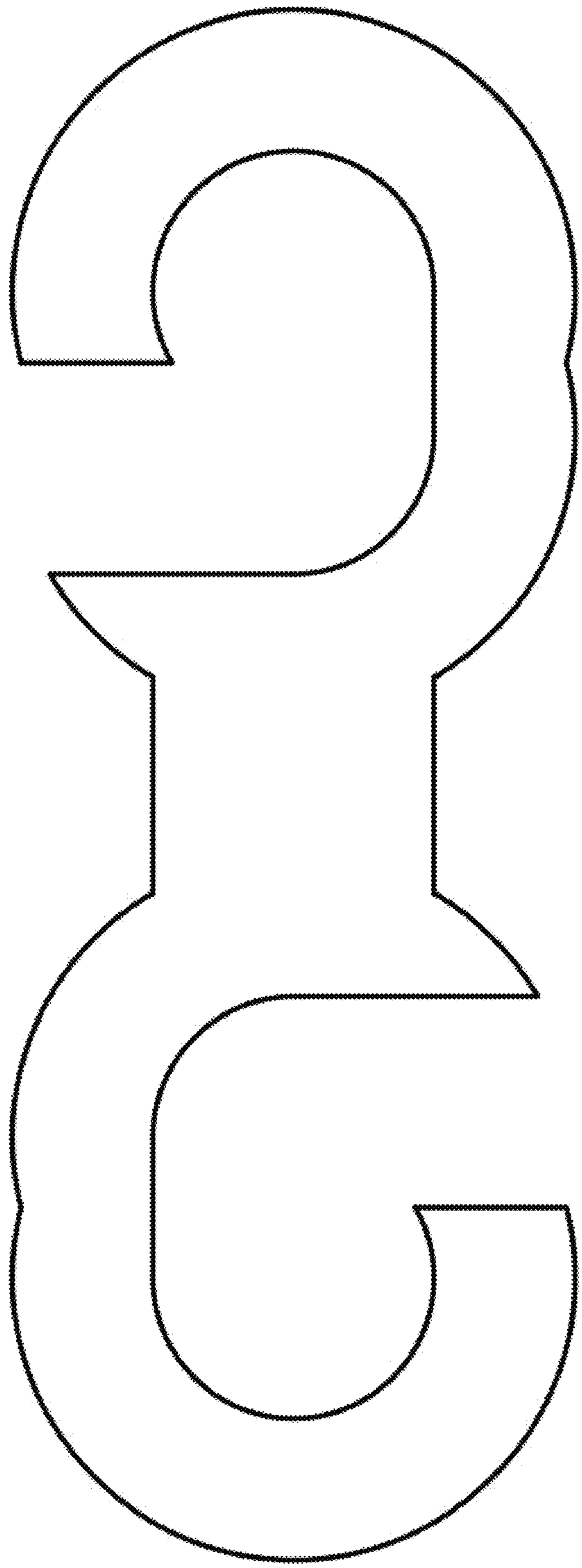

FIG. 6

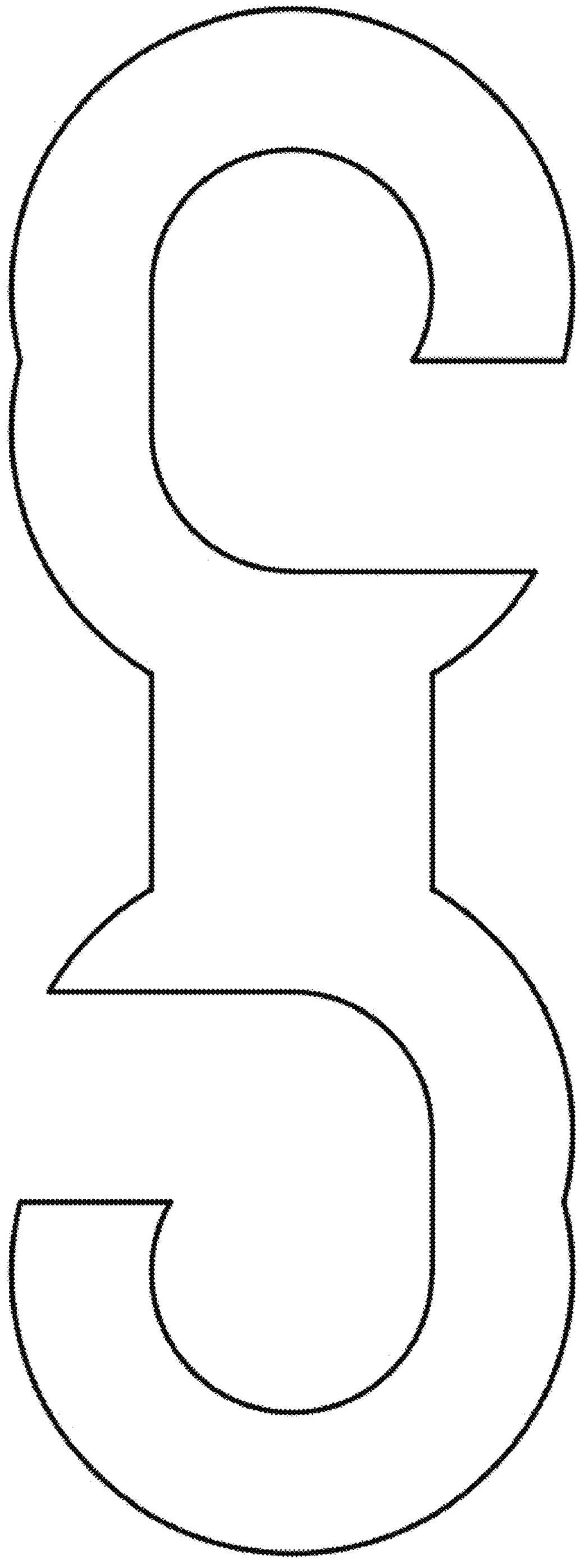

FIG. 7

1.8

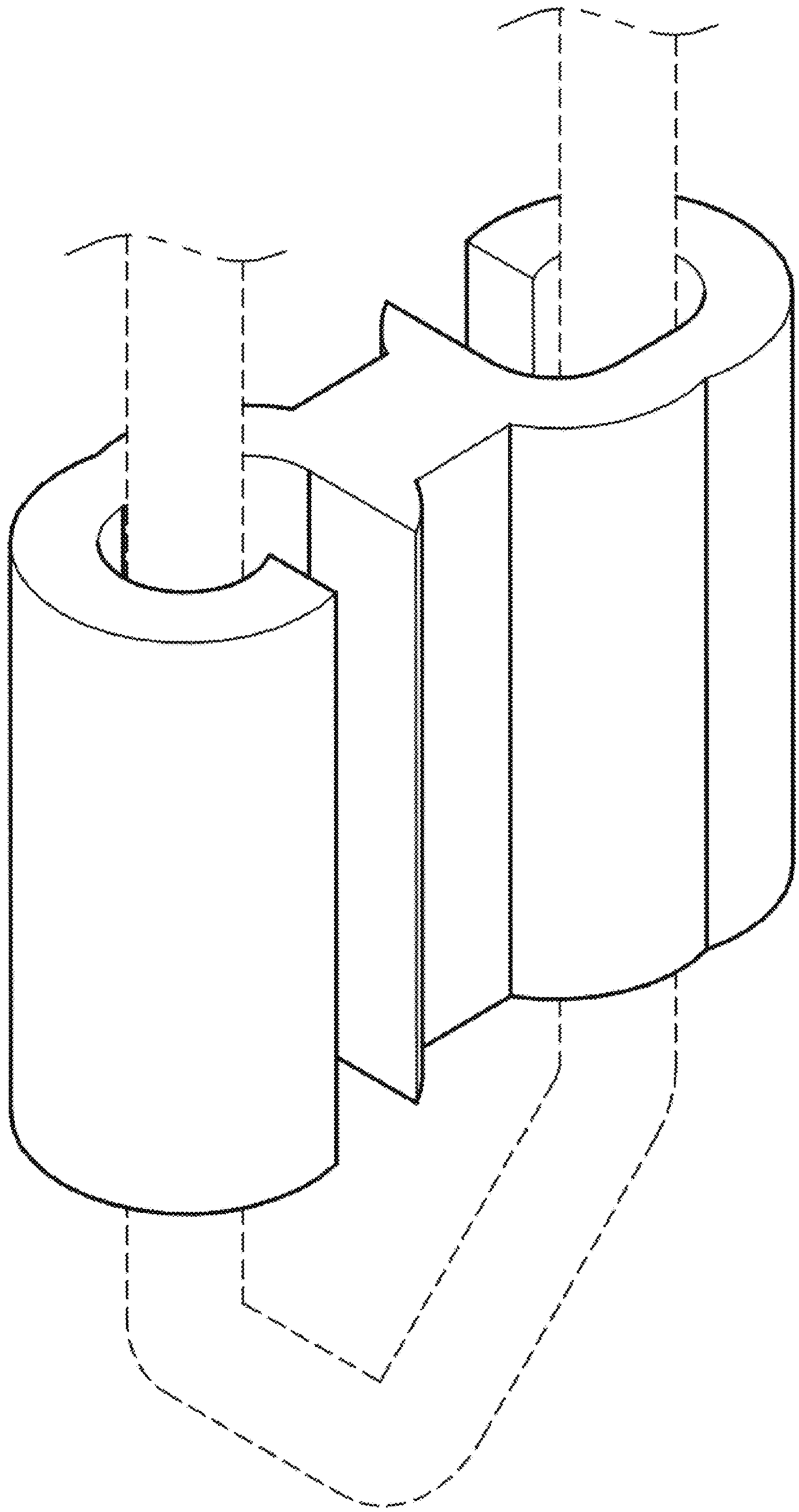

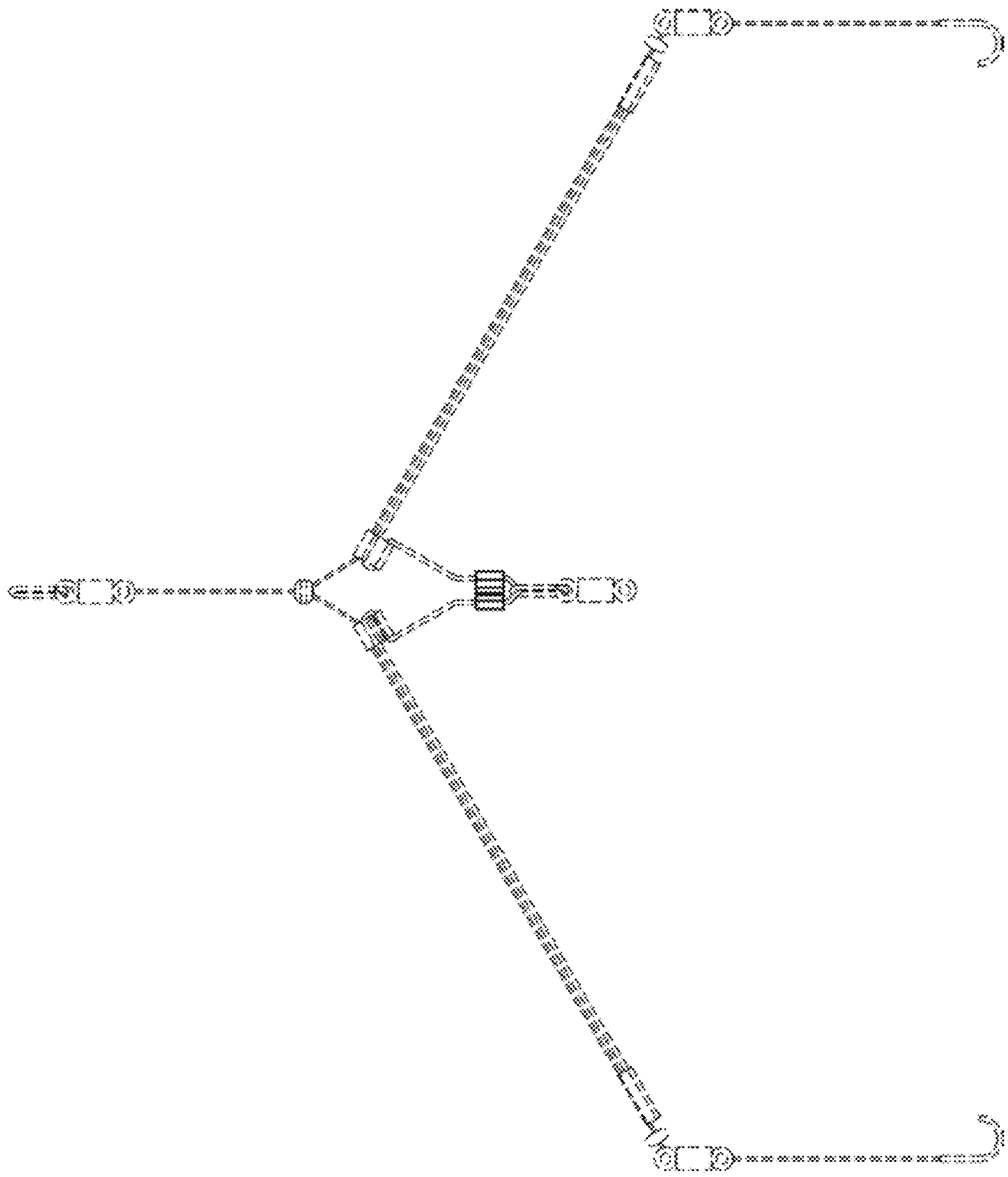

FIG. 9

1.10

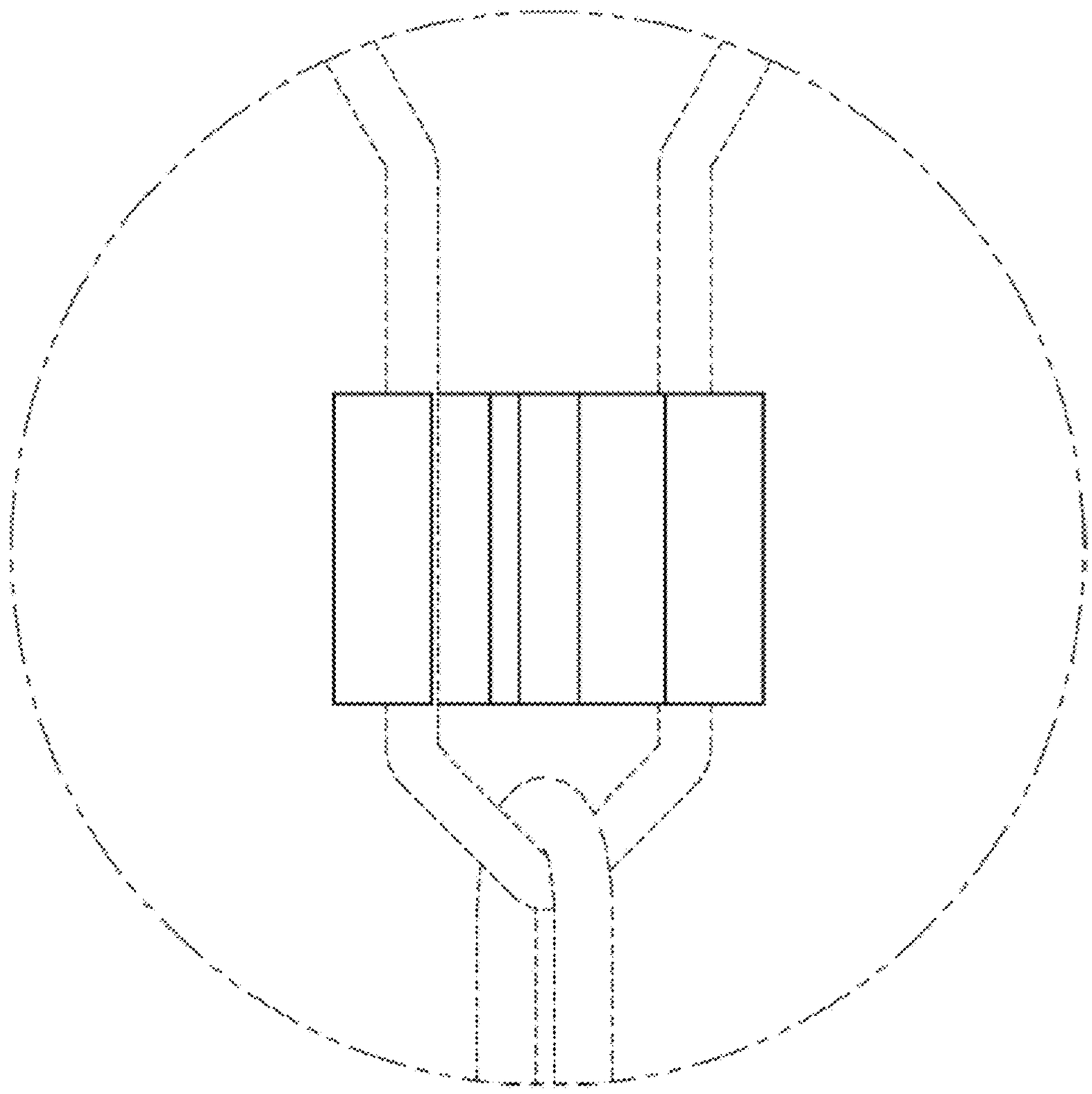

2.1

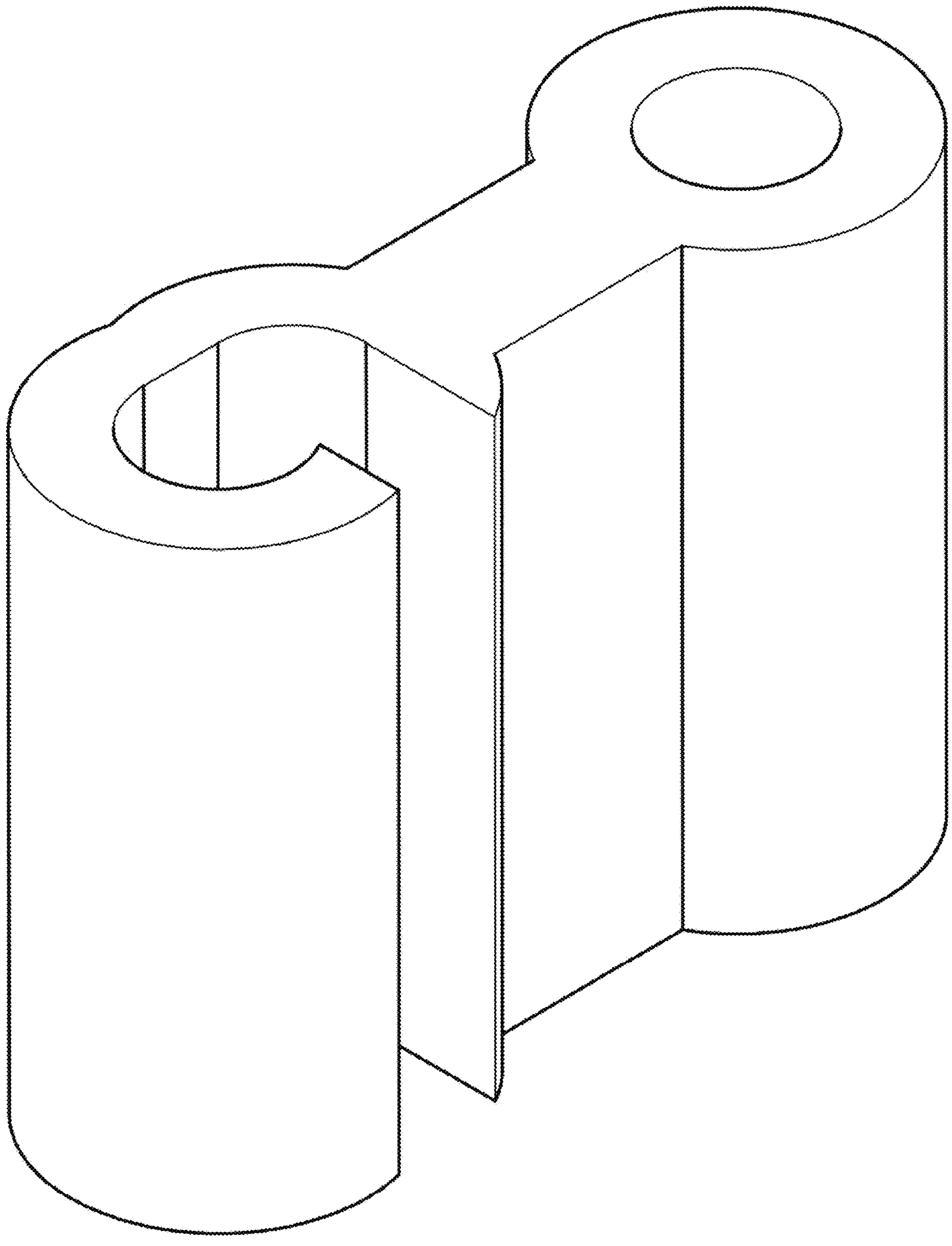

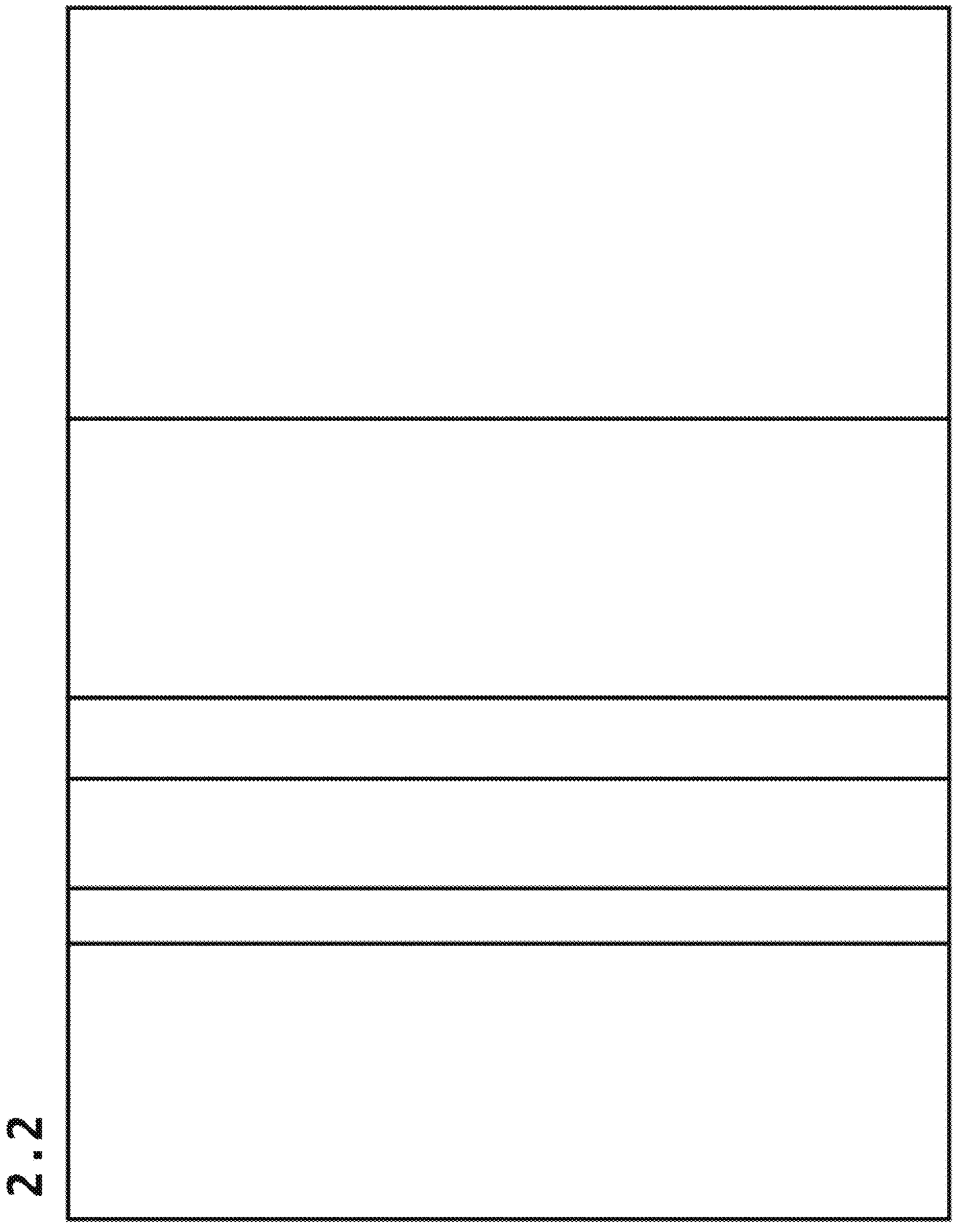
2.2

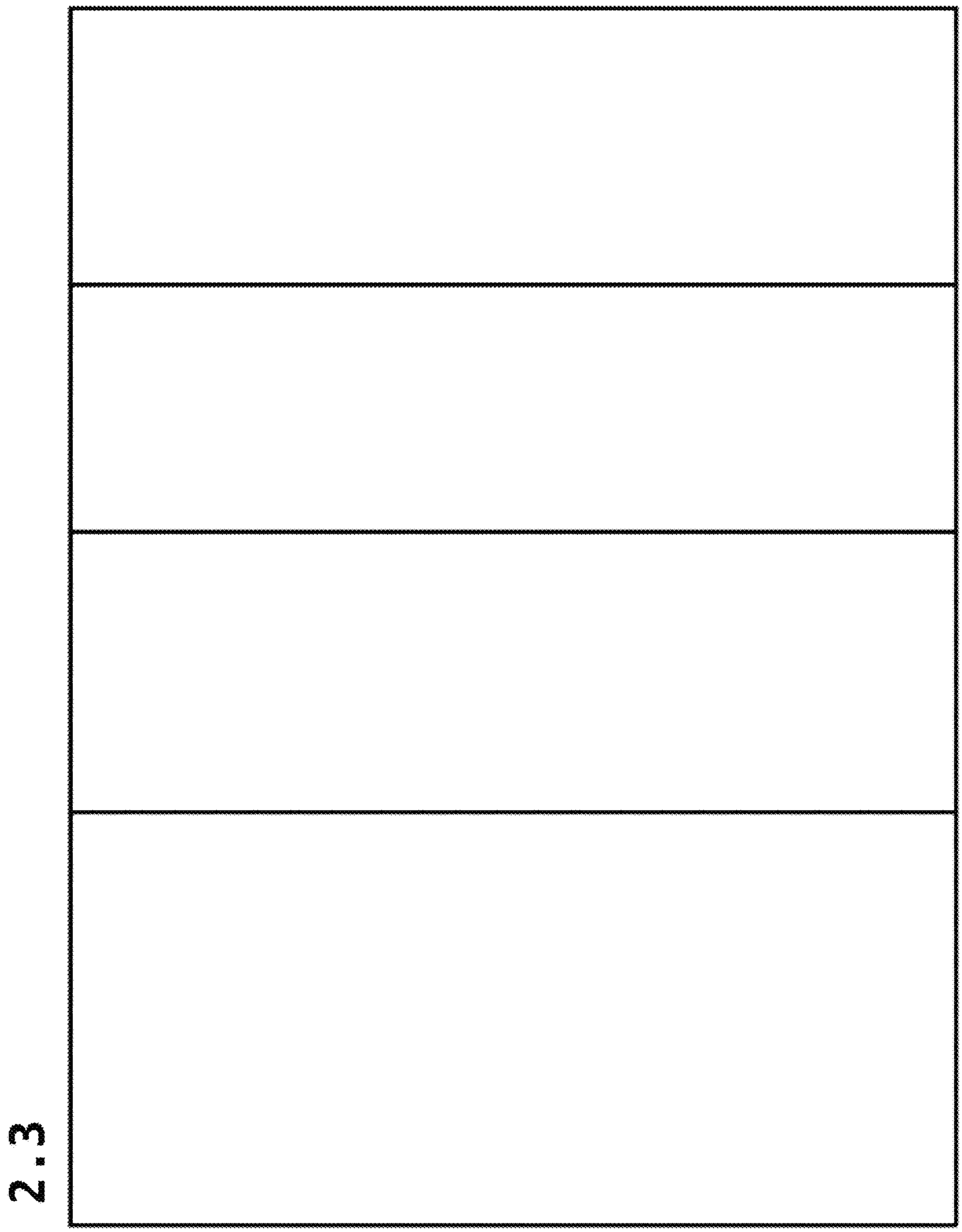
2.3

2.4

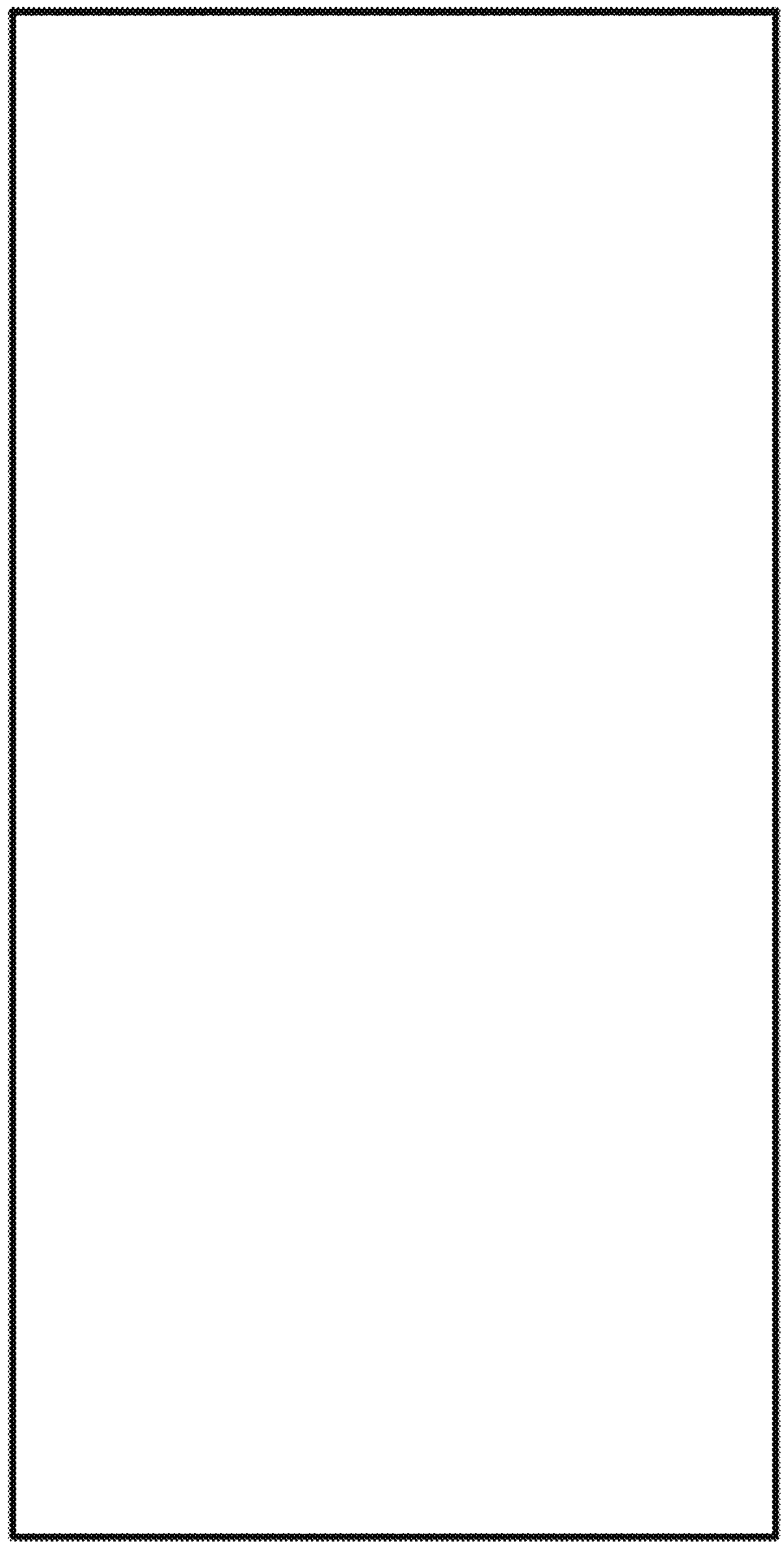

2.5

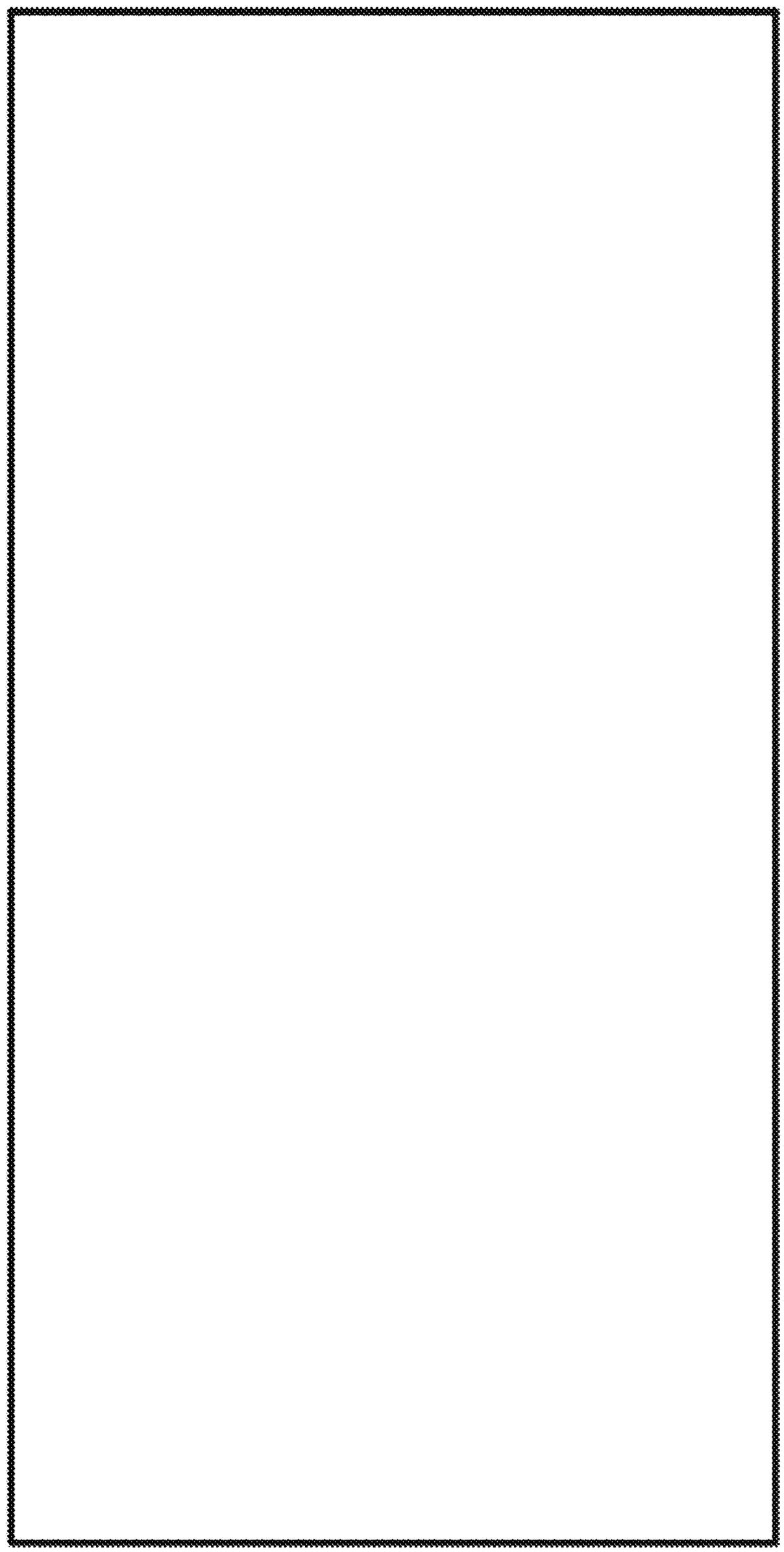

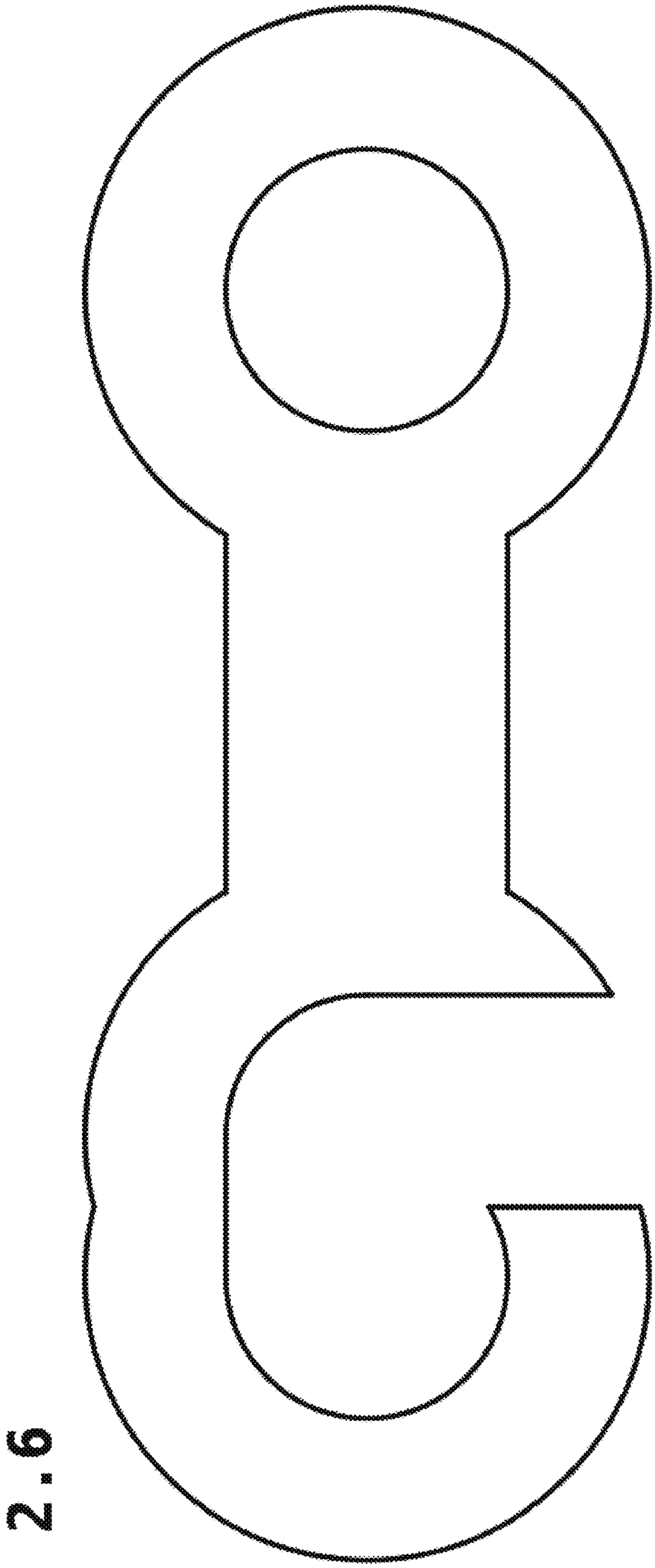

2.6

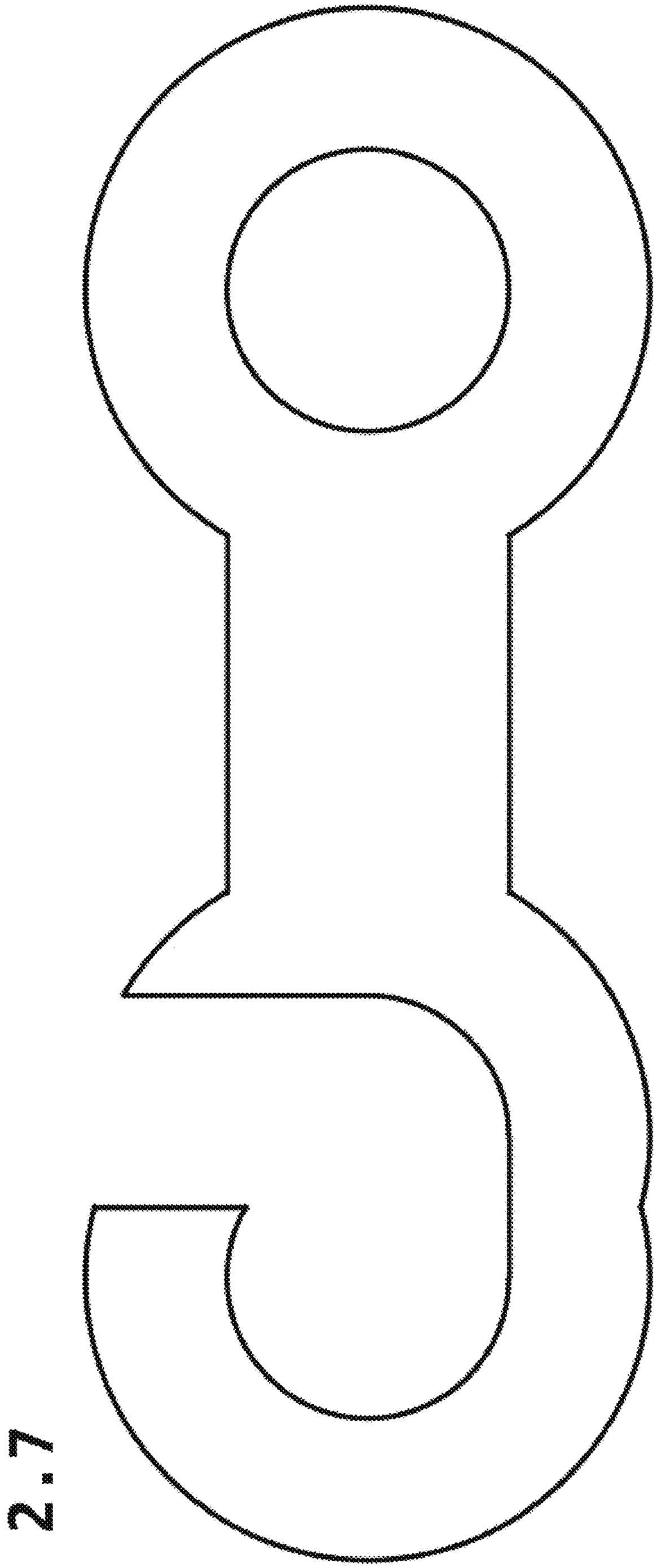
2.7

2.8

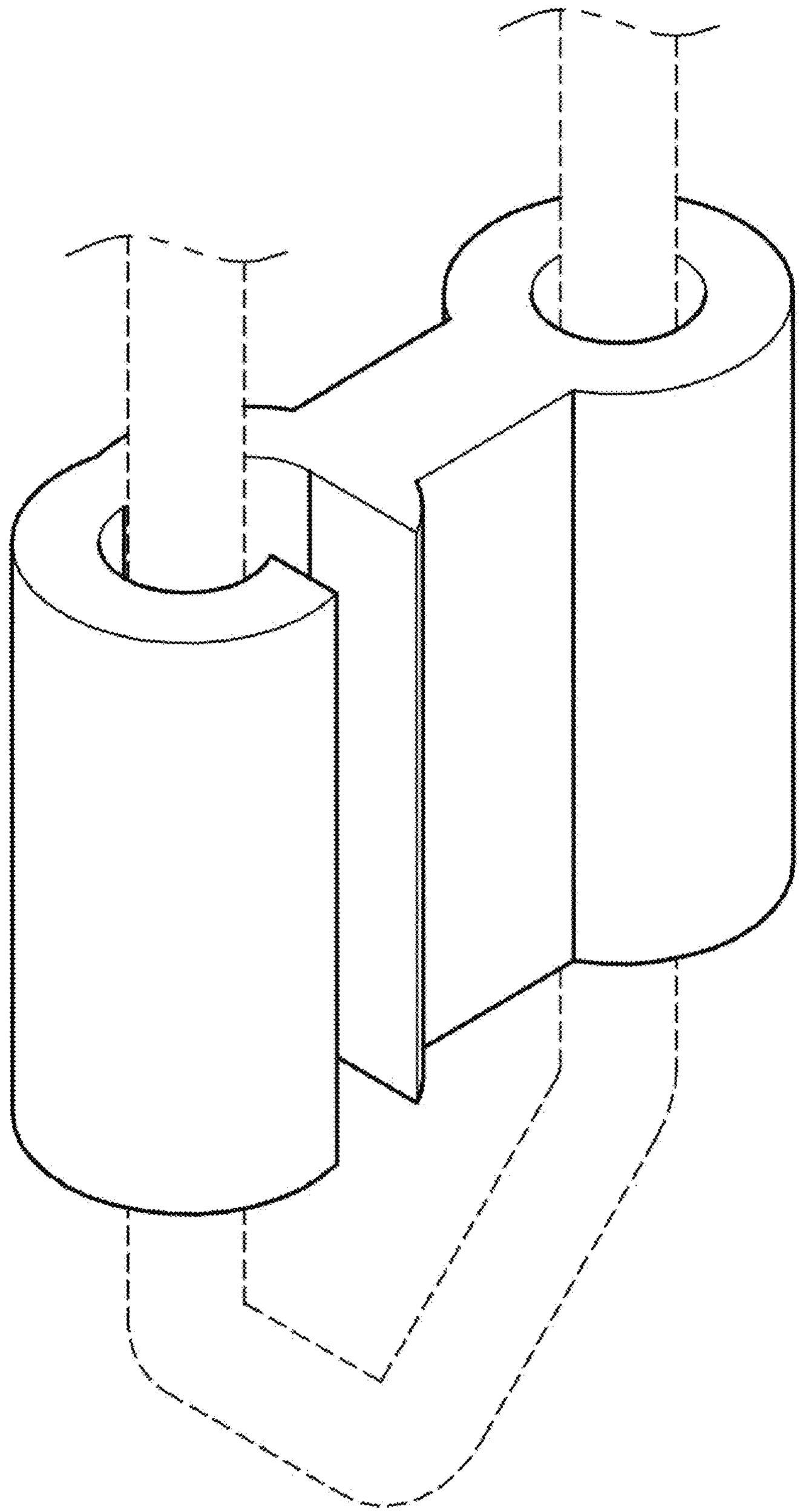

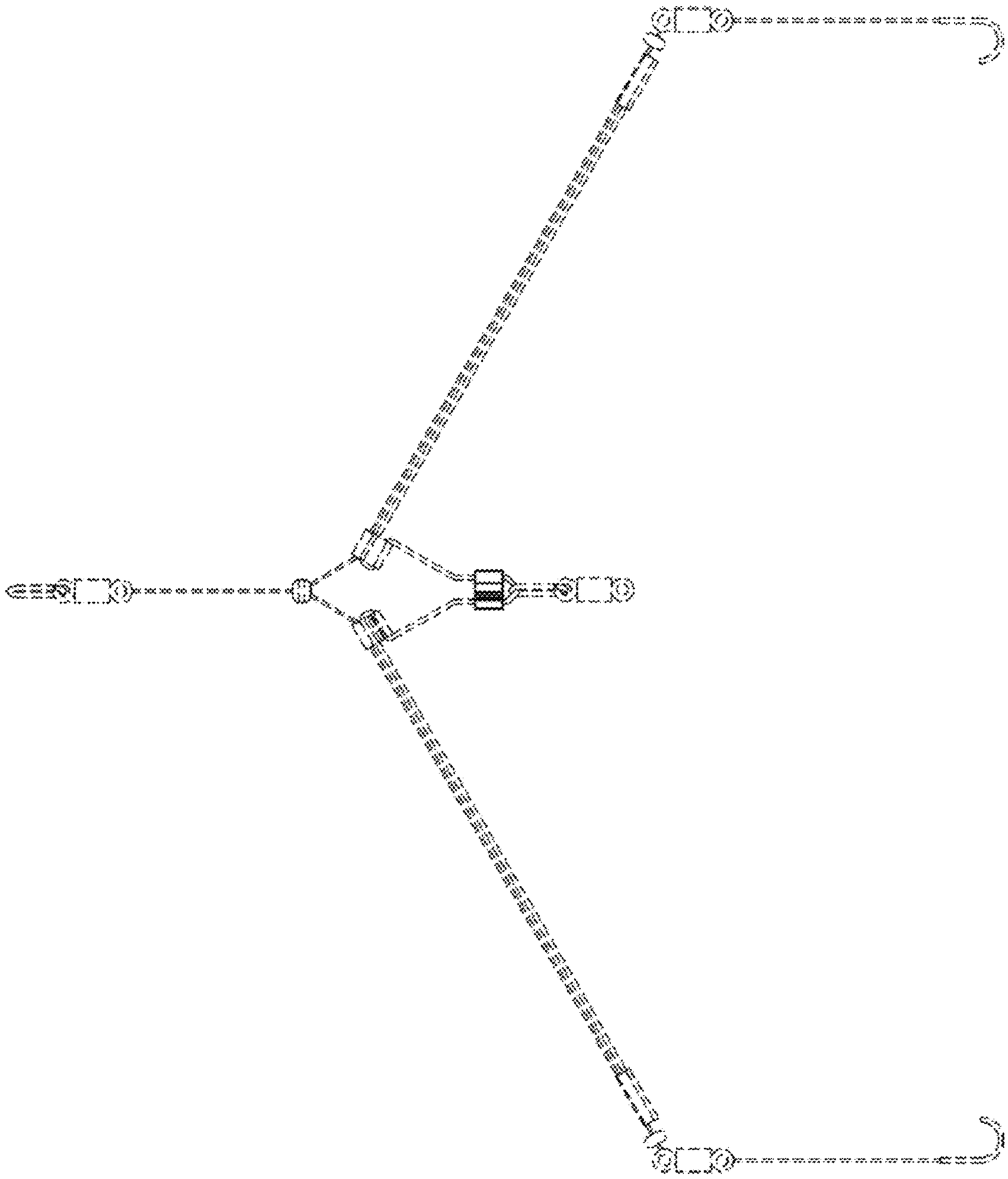

2.9

2.10

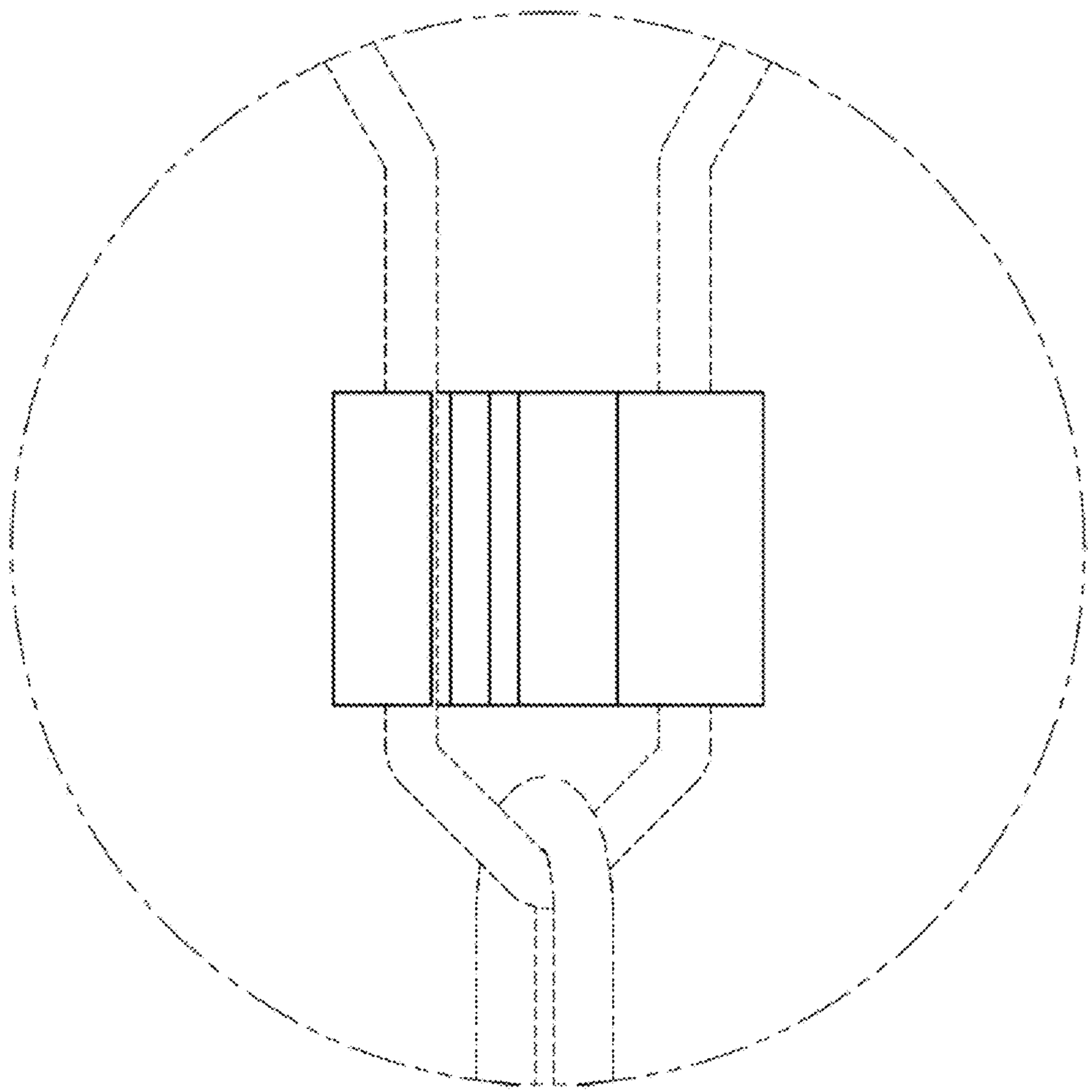

3.1

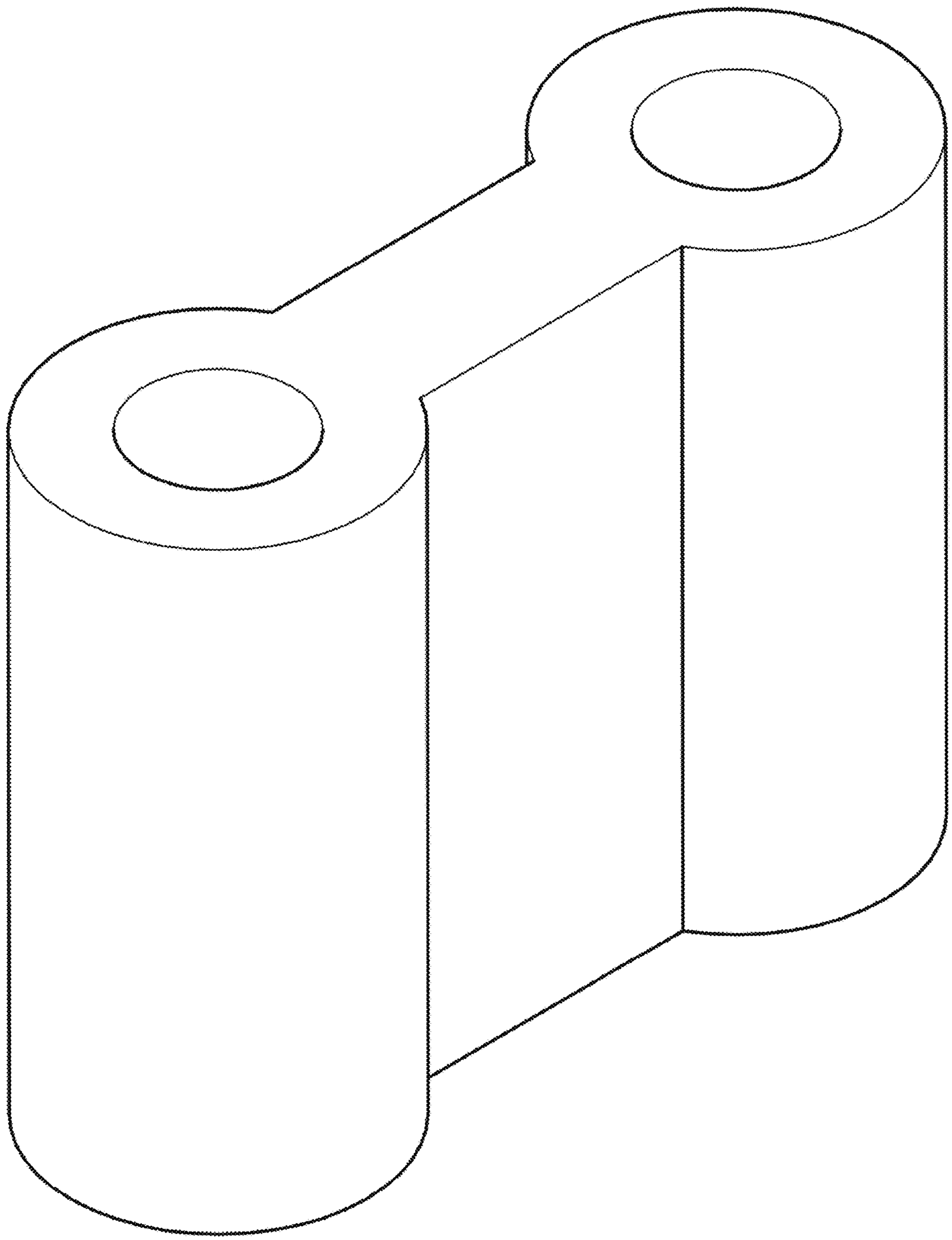

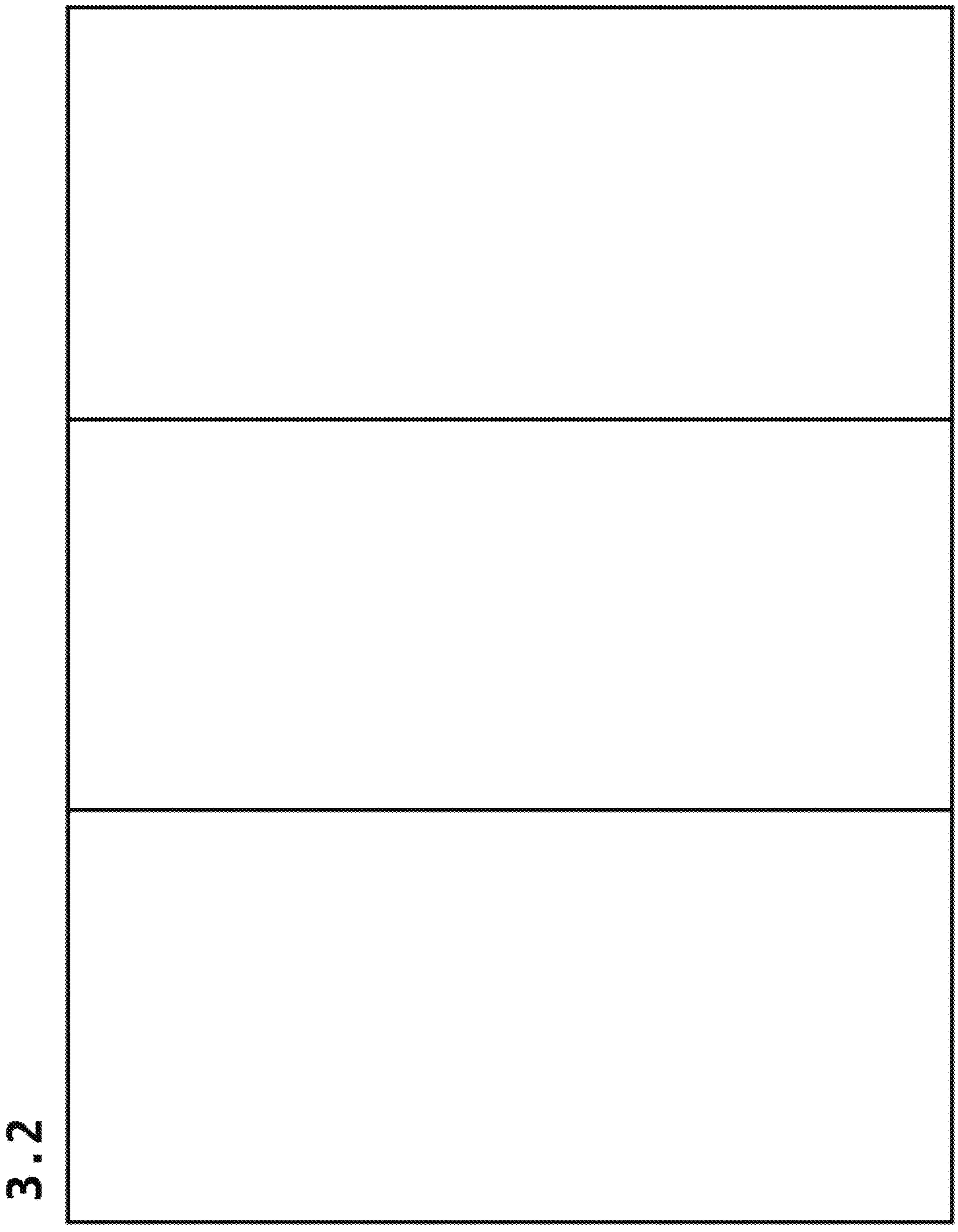
3.2

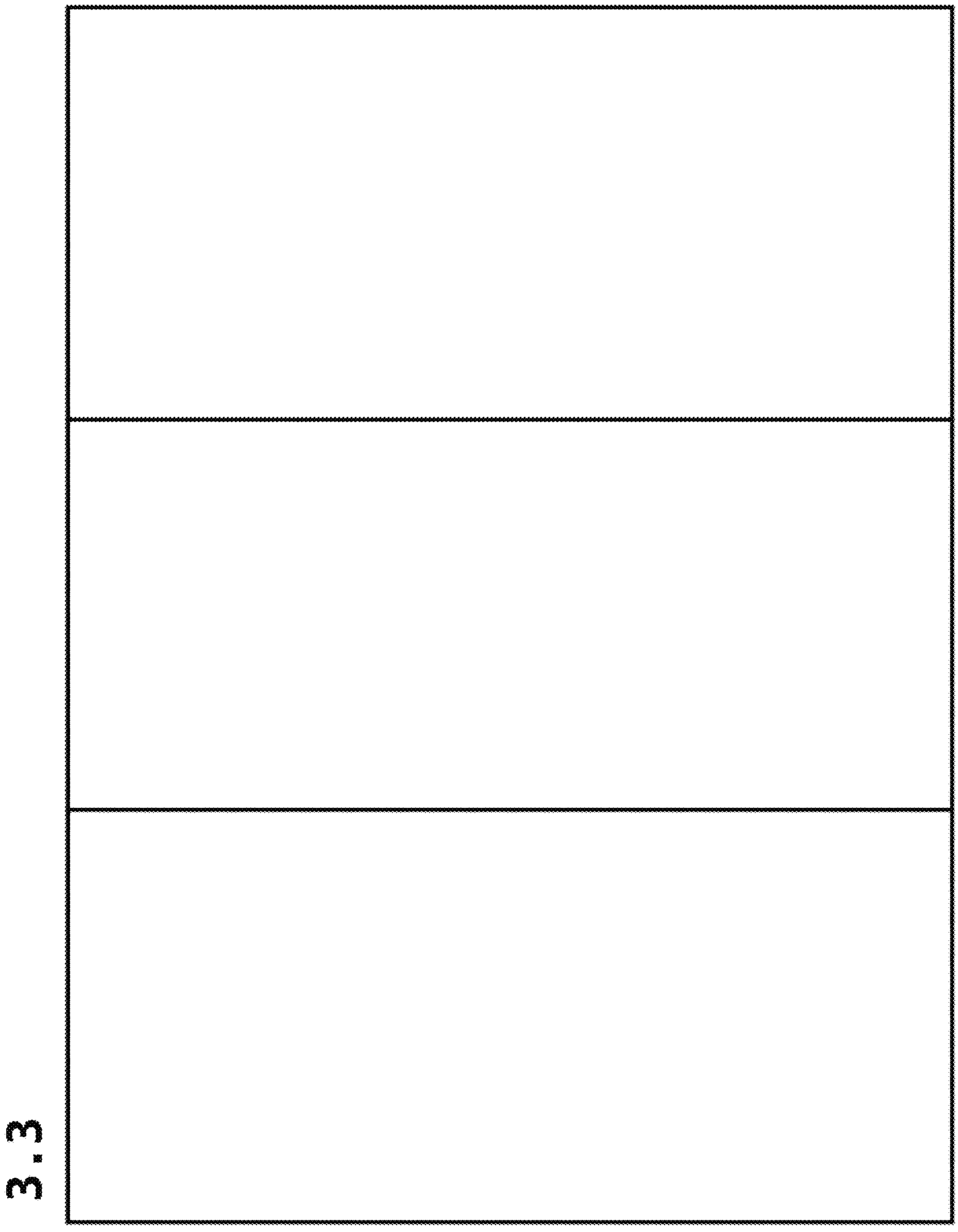

3.3

3.4

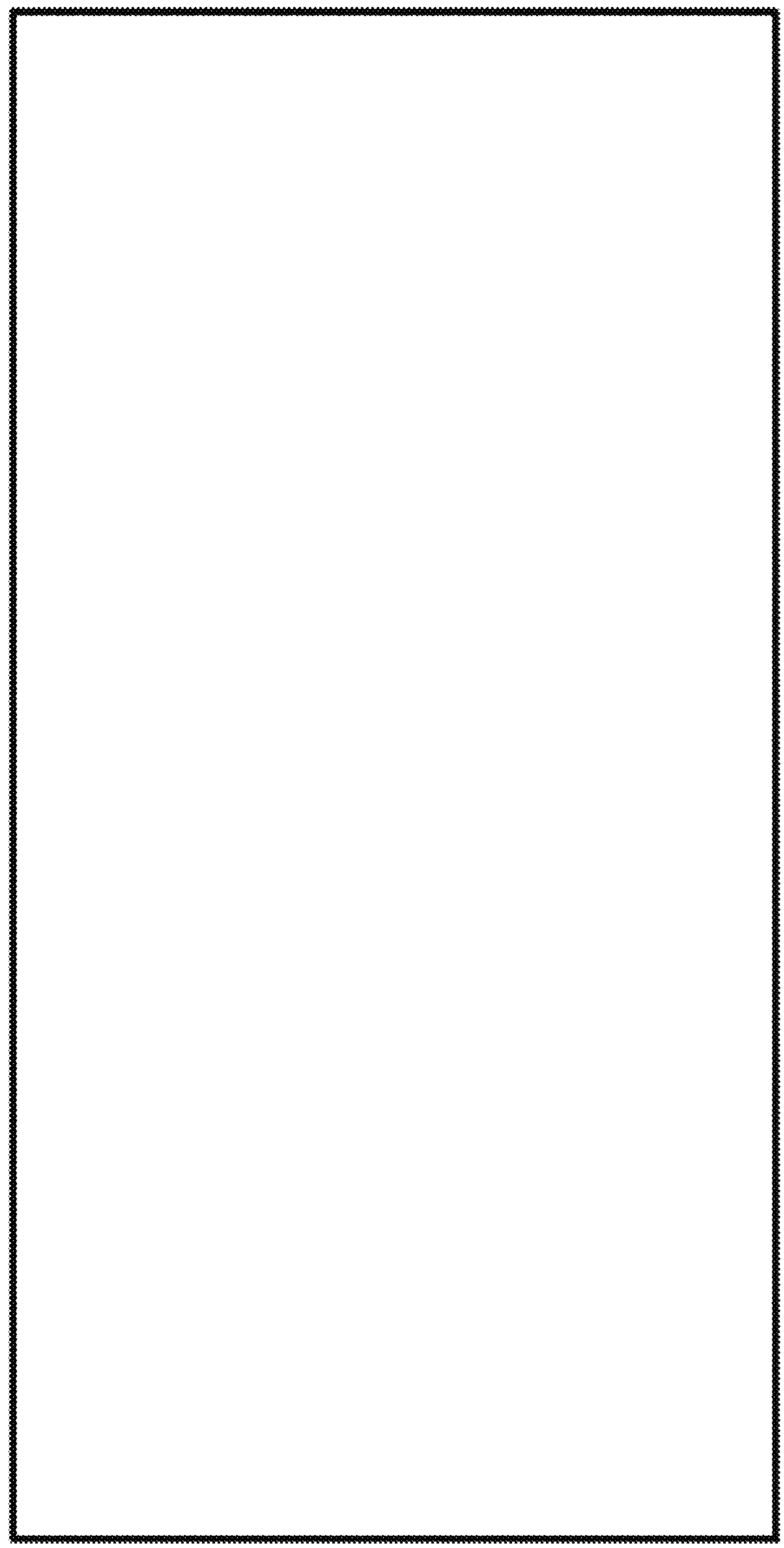

3.5

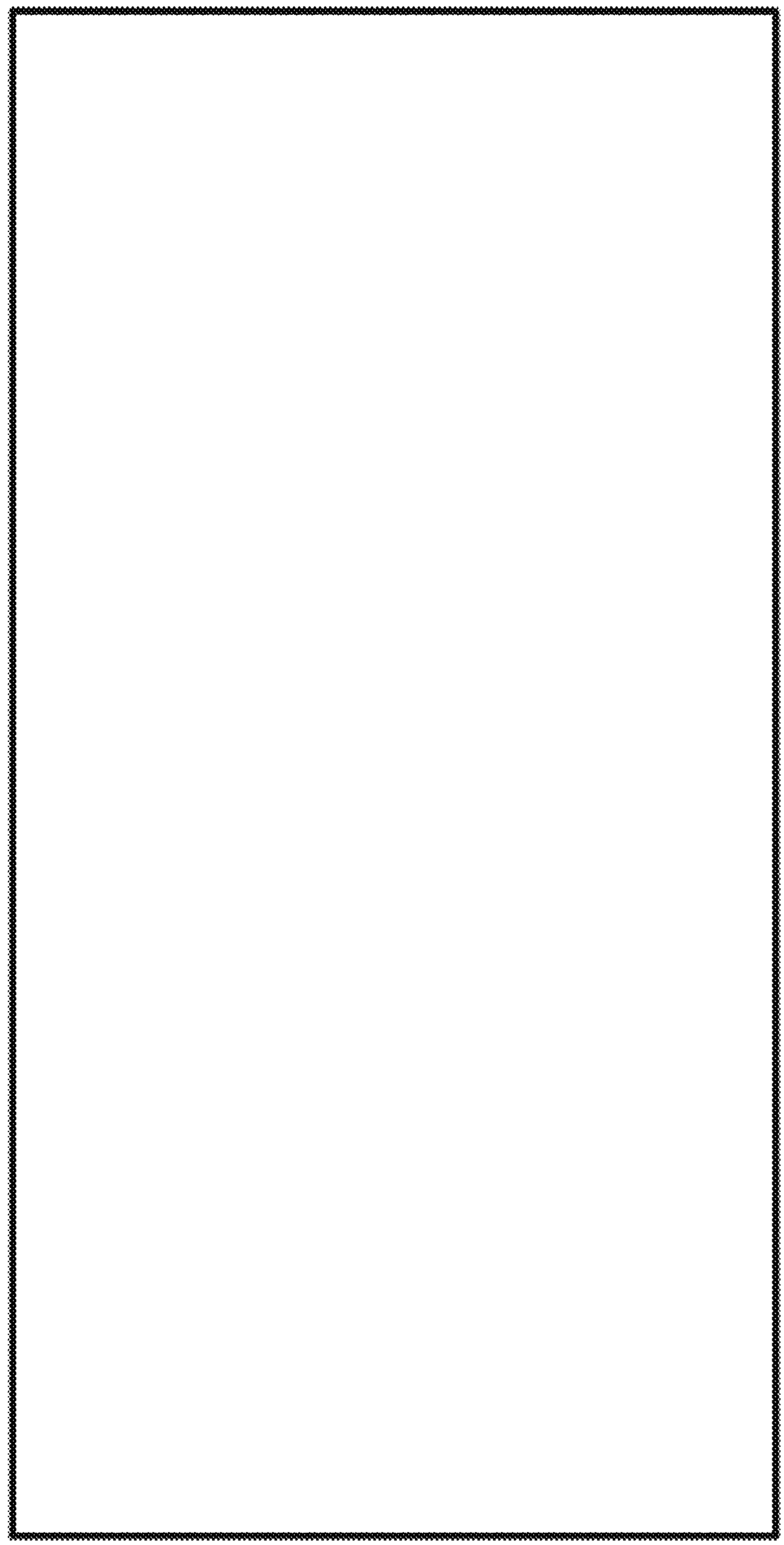

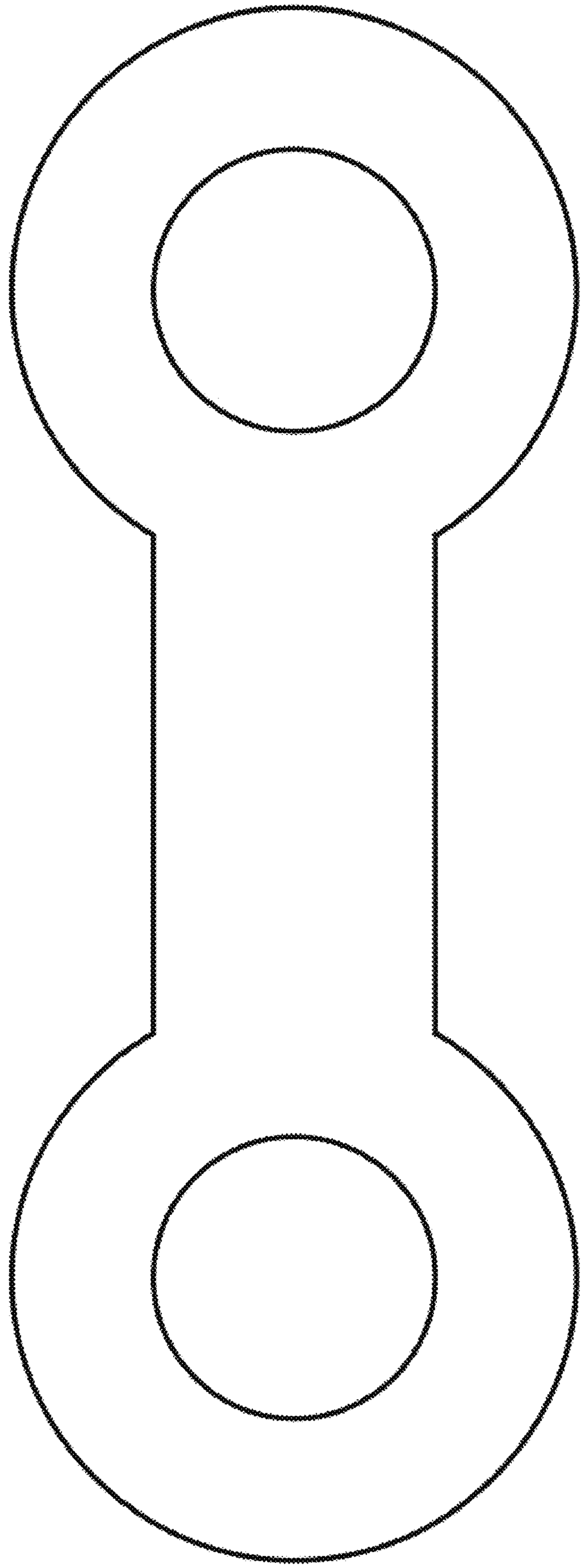

3.6

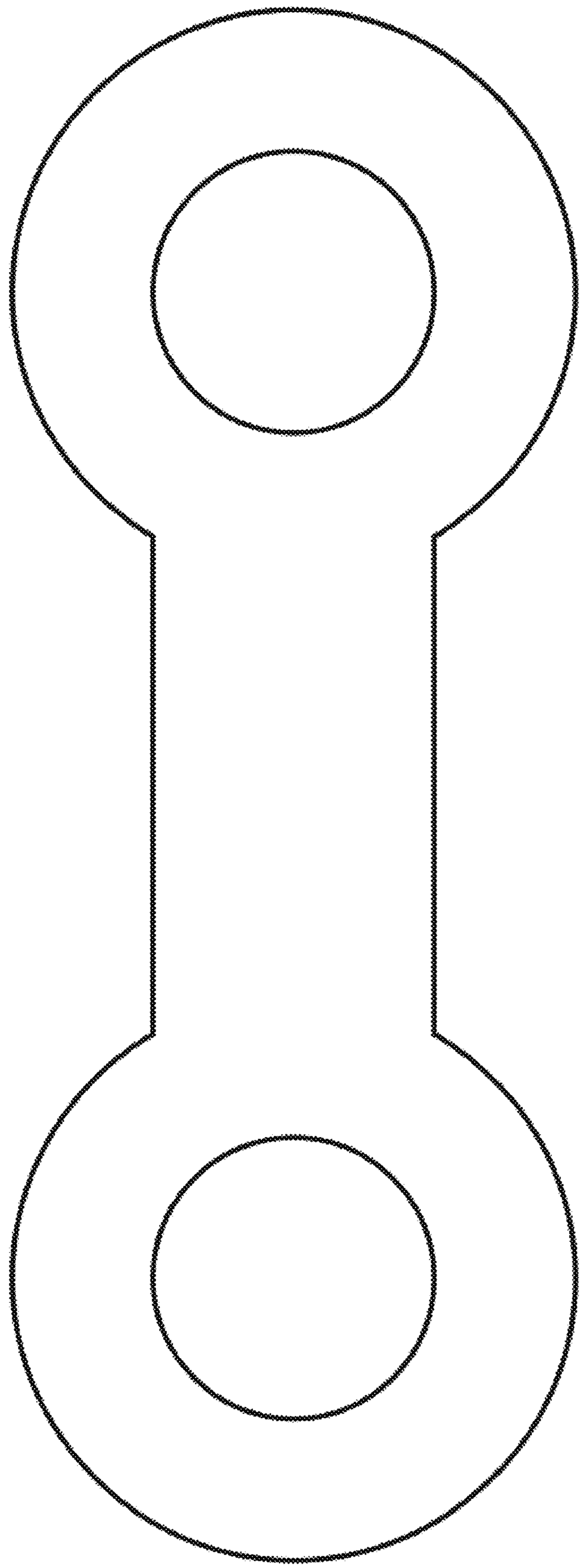

3.7

3.8

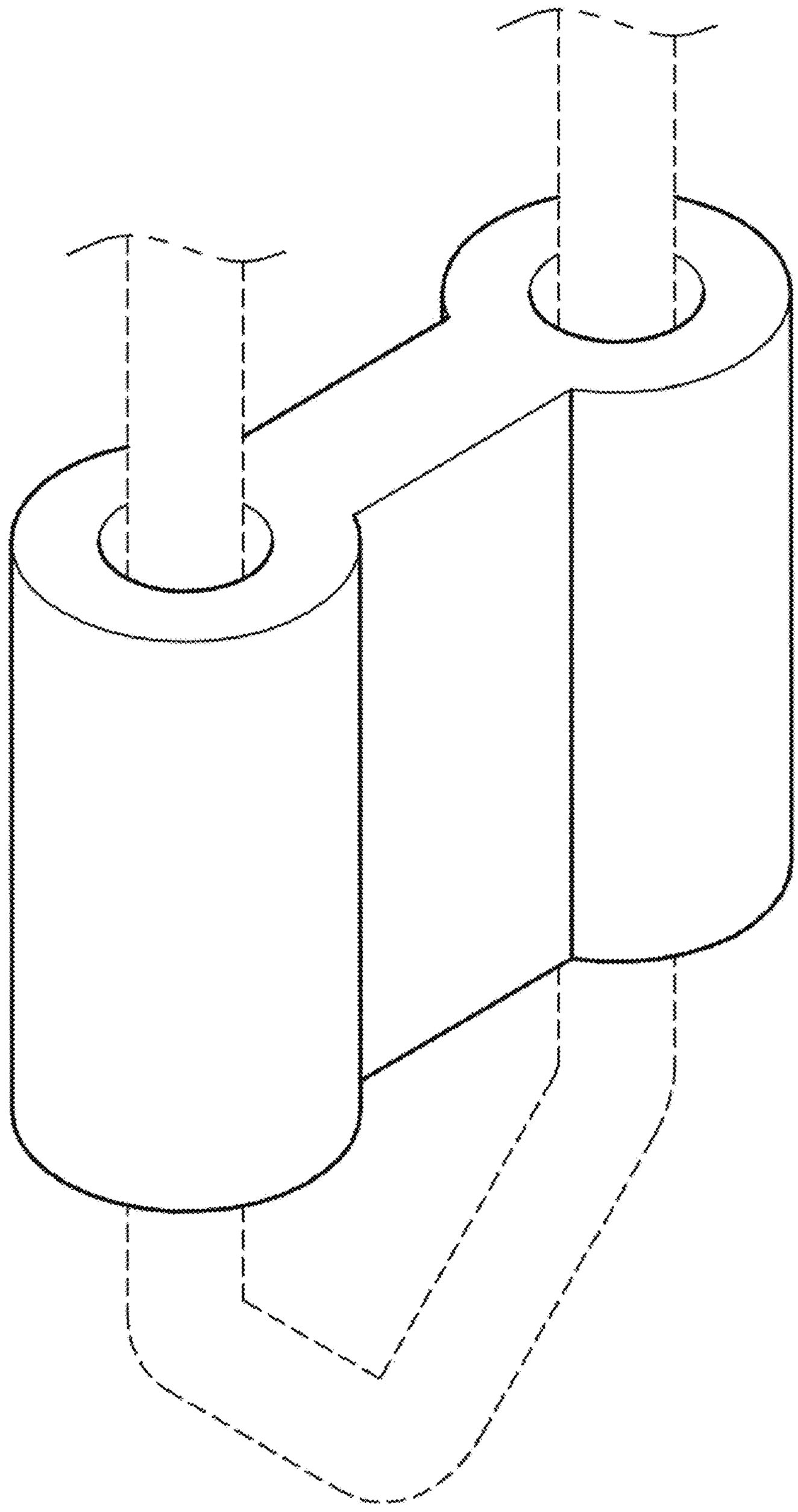

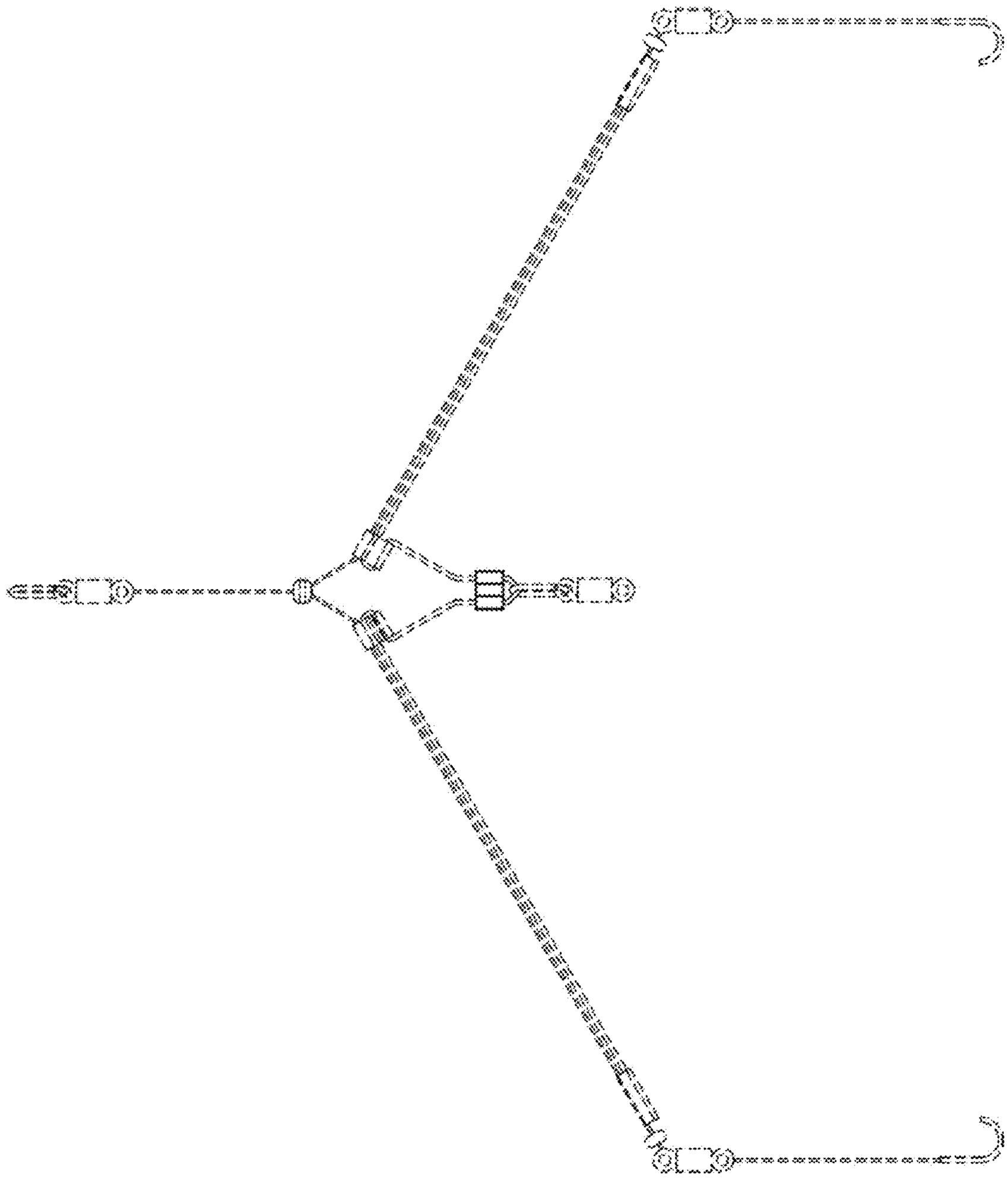

FIG. 29
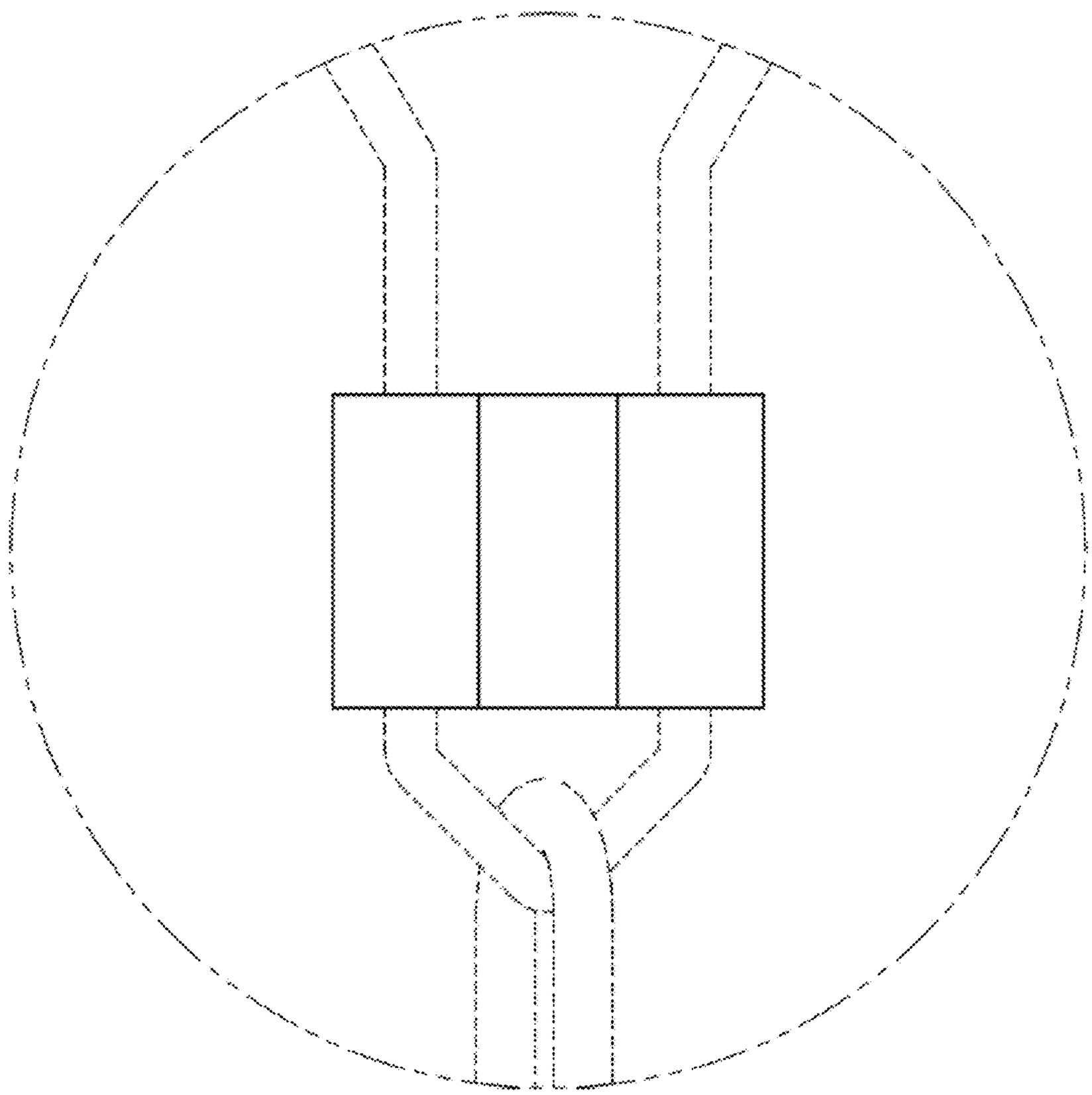
3.10