US0D1017230S

(12) **United States Design Patent**
Yu

(10) **Patent No.: US D1,017,230 S**
(45) **Date of Patent: ** Mar. 12, 2024**

(54) **TRAVEL BAG**

(71) Applicant: **Wei Yu**, Changshu (CN)

(72) Inventor: **Wei Yu**, Changshu (CN)

(**) Term: **15 Years**

(21) Appl. No.: **29/915,977**

(22) Filed: **Nov. 7, 2023**

(51) **LOC (14) Cl.** **03-01**
(52) **U.S. Cl.**
USPC **D3/217**
(58) **Field of Classification Search**
USPC D3/215–218, 225, 226, 230–232, D3/252–254, 262, 285–289, 303, 321, D3/327

(Continued)

(56) **References Cited**

U.S. PATENT DOCUMENTS

D285,748 S * 9/1986 Feinberg 190/103
D645,662 S * 9/2011 Perez D3/216

(Continued)

FOREIGN PATENT DOCUMENTS

KR 300857711.0000 * 10/2015
RU 00109496 * 7/2018

OTHER PUBLICATIONS

Enzosum garment bag, posted at amazon.com, first available Sep. 25, 2023, retrieved on Nov. 22, 2023, online, https://www.amazon.com/Garment-Convertible-Compartment-Hanging-Suitcase/dp/B0CDRZCSJZ?th=1 (Year: 2023).*

(Continued)

Primary Examiner — John R Yeh
Assistant Examiner — Dustin Andrew Griffith
(74) *Attorney, Agent, or Firm* — Daniel M. Cohn; Howard M. Cohn

(57) **CLAIM**

The ornamental design for a travel bag, as shown and described.

DESCRIPTION

FIG. **1** is a perspective view of a travel bag showing my new design;
FIG. **2** is another perspective view thereof;
FIG. **3** is another perspective view thereof;
FIG. **4** is a front elevational view thereof;
FIG. **5** is a rear elevational view thereof;
FIG. **6** is a left side elevational view thereof;
FIG. **7** is a right side elevational view thereof;
FIG. **8** is a top plan view thereof;
FIG. **9** is a bottom plan view thereof;
FIG. **10** is a perspective view of the travel bag where the backpack straps of the travel bag are disconnected with hooking rings on the rear sides of the travel bag;
FIG. **11** is another perspective view thereof;
FIG. **12** is a perspective view of the travel bag where the backpack straps of the travel bag are received in aback pocket of the travel bag;
FIG. **13** is another perspective view thereof;
FIG. **14** is a perspective view of the travel bag where the backpack straps of the travel bag are received in the back pocket of the travel bag and the top and side surface covers of the travel bag are opened to show the inner portion of the travel bag;
FIG. **15** is another perspective view thereof;
FIG. **16** is a perspective view of the travel bag where the travel bag is in a fully unfolded state;
FIG. **17** is another perspective view thereof;
FIG. **18** is an enlarged view of portion **18** shown in FIG. **1**; and,
FIG. **19** is an enlarged view of portion **19** shown in FIG. **3**.
The thick evenly spaced broken lines in the drawings depict stitching and form no part of the claimed design. The thin evenly spaced broken lines in the drawings depict portions of the travel bag and form no part of the claimed design. The dot-dash broken lines represent boundaries of the enlarged portions and form no part of the claimed design.

1 Claim, 19 Drawing Sheets

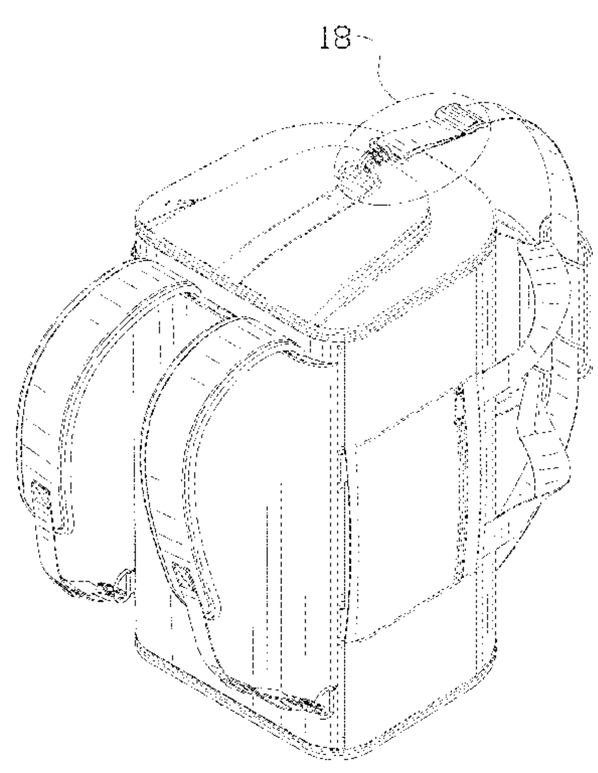

(58) **Field of Classification Search**

CPC A45F 3/02; A45F 3/04; A45F 3/08; A45F 3/10; A45F 3/14; A45F 3/042; A45F 3/047; A45F 2200/00; A45F 4/02

See application file for complete search history.

(56) **References Cited**

U.S. PATENT DOCUMENTS

D732,824	S	*	6/2015	Tzortzis	D3/288
D778,049	S	*	2/2017	Kogelnik	D3/285
D871,072	S		12/2019	Coughlan et al.	
D876,082	S	*	2/2020	Jais	D3/217
D888,425	S	*	6/2020	Wang	D3/289
D917,883	S		5/2021	Smith	
D940,455	S	*	1/2022	Ulffers	D3/285
D958,530	S	*	7/2022	Seiders	D3/217
D968,088	S	*	11/2022	Seiders	D3/217
D990,162	S	*	6/2023	Duan	D3/289
11,786,026	B2	*	10/2023	Frandsen	A45C 13/02 150/112
2006/0065500	A1	*	3/2006	Herrig	A45C 7/0077 383/4
2008/0279483	A1	*	11/2008	Yu	A45C 7/0068 383/42

OTHER PUBLICATIONS

Newhey garment bag, posted at amazon.com, first available Jul. 18, 2019, retrieved on Nov. 22, 2023, online, https://www.amazon.com/Garment-Convertible-Compartment-Waterproof-Weekender/dp/B07VHM9GNX?th=1 (Year: 2019).*

Seyfocnia carry on garment bag, posted at amazon.com, first available Aug. 4, 2019, retrieved on Nov. 22, 2023, online, https://www.amazon.com/Garment-Waterproof-Business-Leather-Compartment/dp/B07VMRKC5F?th=1 (Year: 2019).*

"Convertible Travel Garment Bag, Carry on Garment Duffel Bag for Men Women—4 in 1 Hanging Suit Business Travel Bag with Double Back Strap and Detachable Shoulder, Waterproof—Black", Retrieved Nov. 7, 2023. Retrieved from Internet, https://www.amazon.com/dp/B0BXRWS14V?th=1.

* cited by examiner

FIG. 1

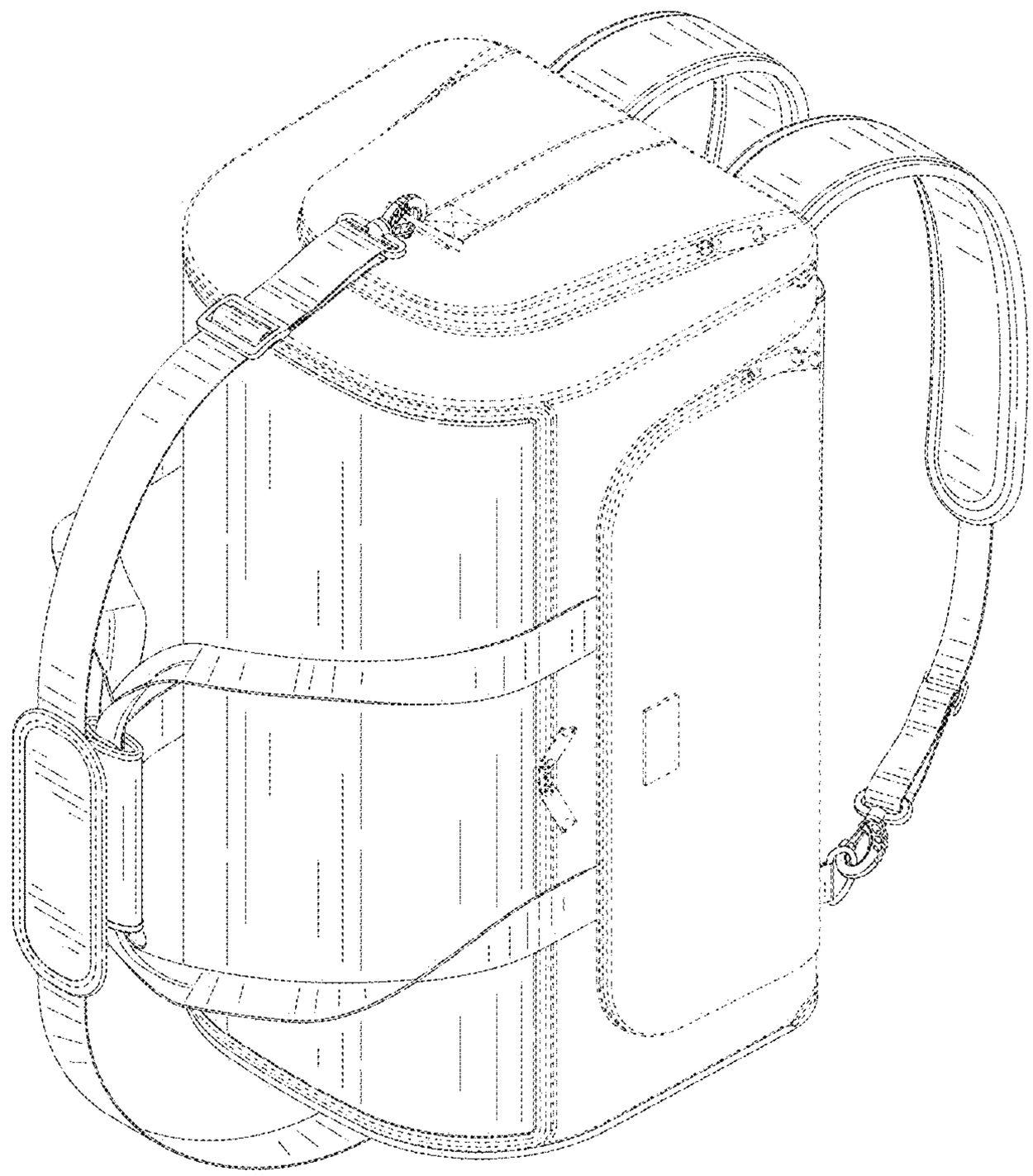

FIG. 2

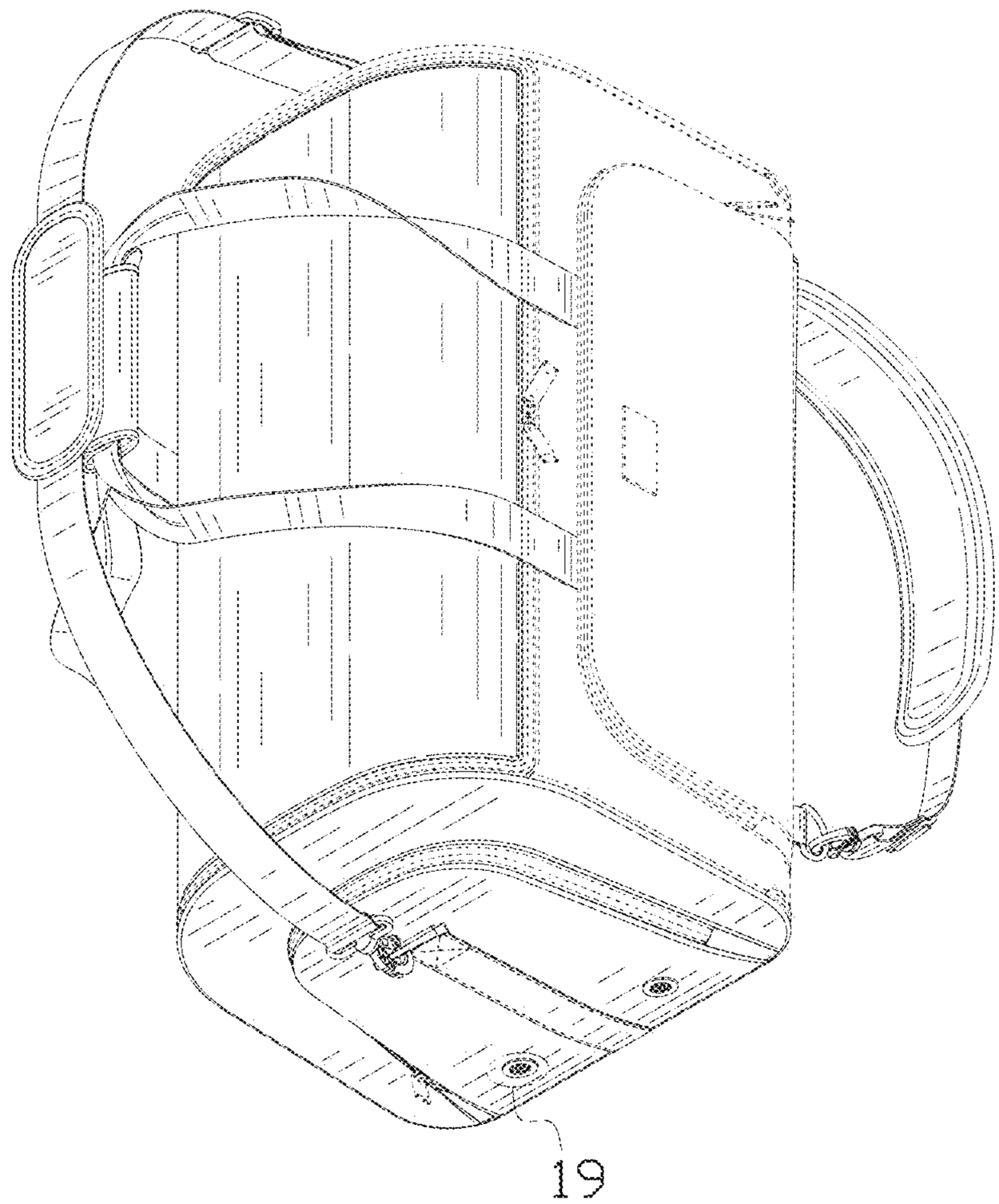

FIG. 3

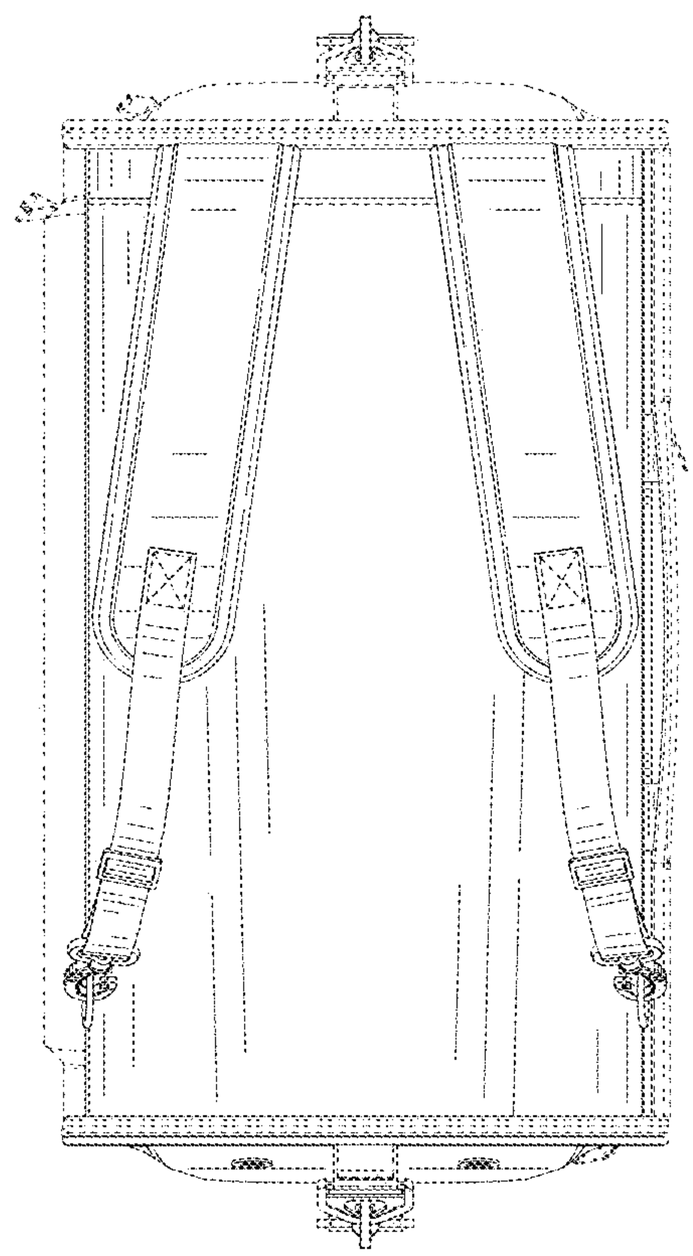

FIG. 4

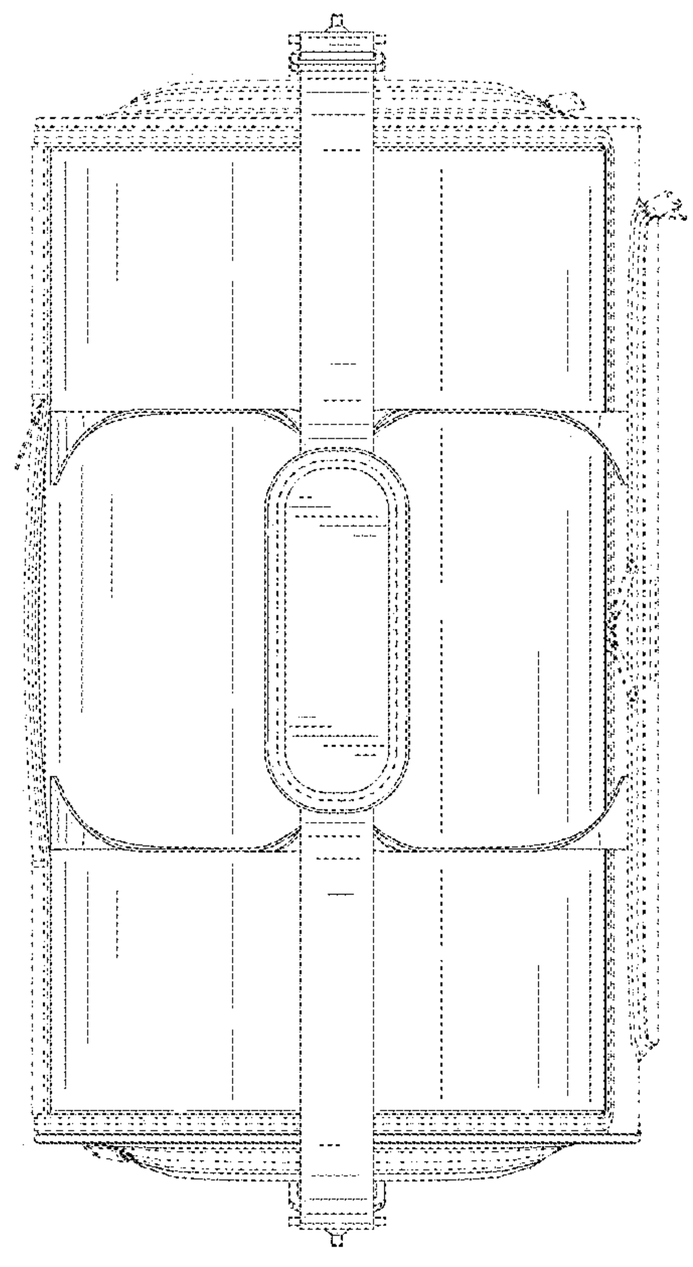

FIG. 5

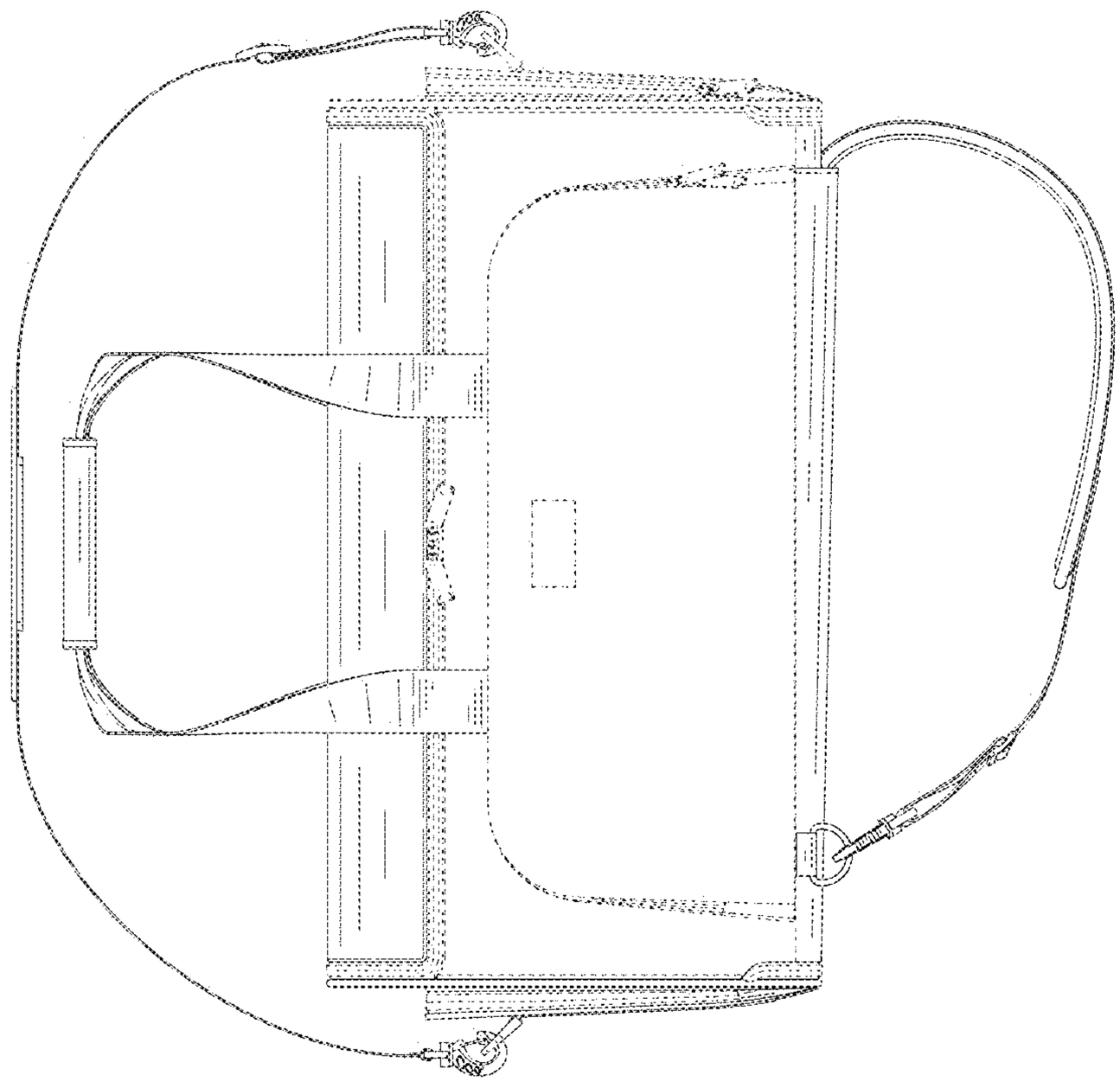

FIG. 6

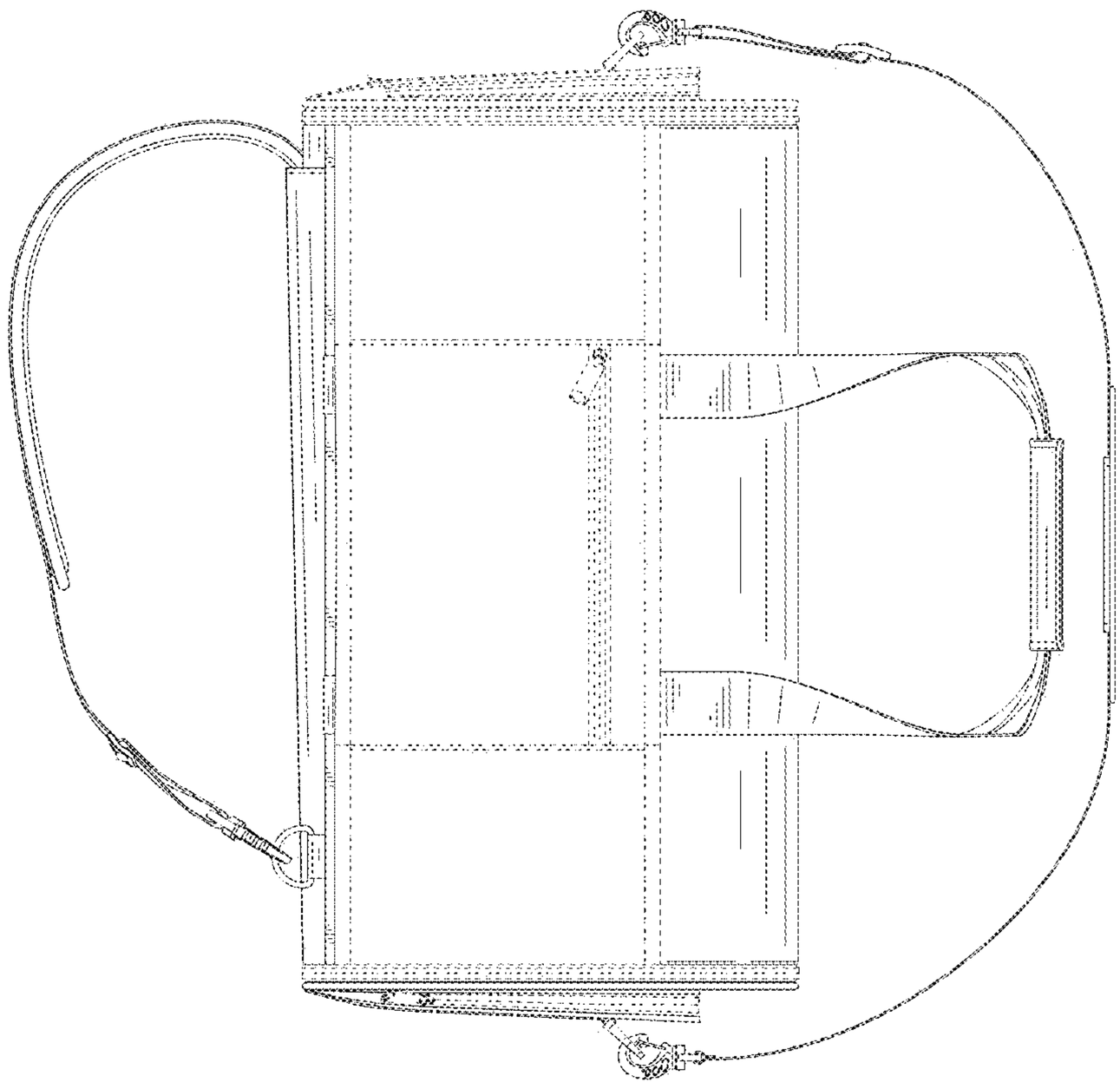

FIG. 7

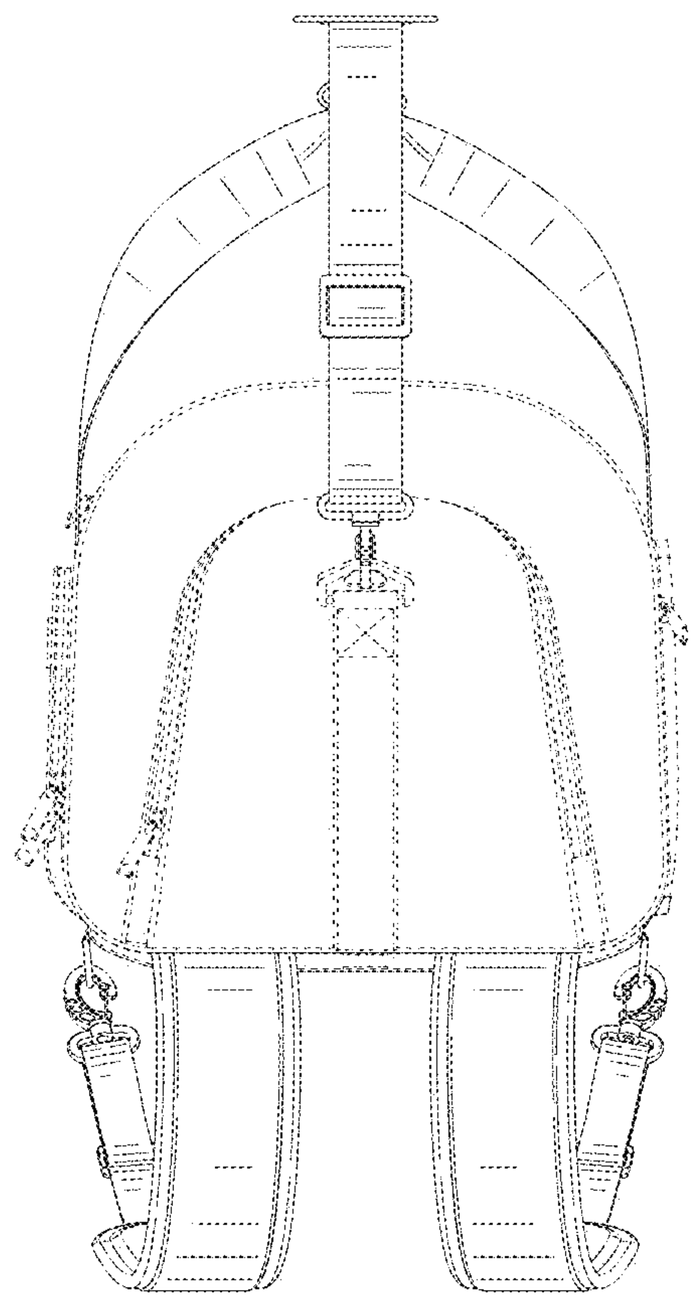

FIG. 8

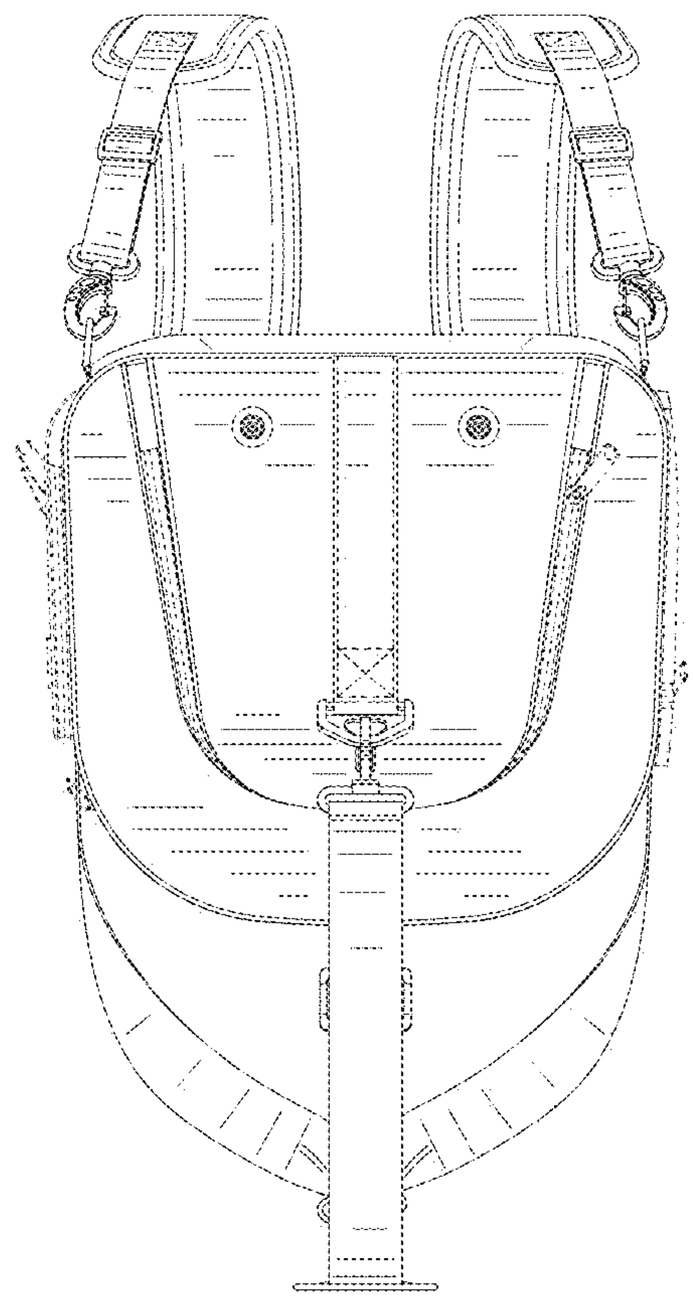

FIG. 9

FIG. 10

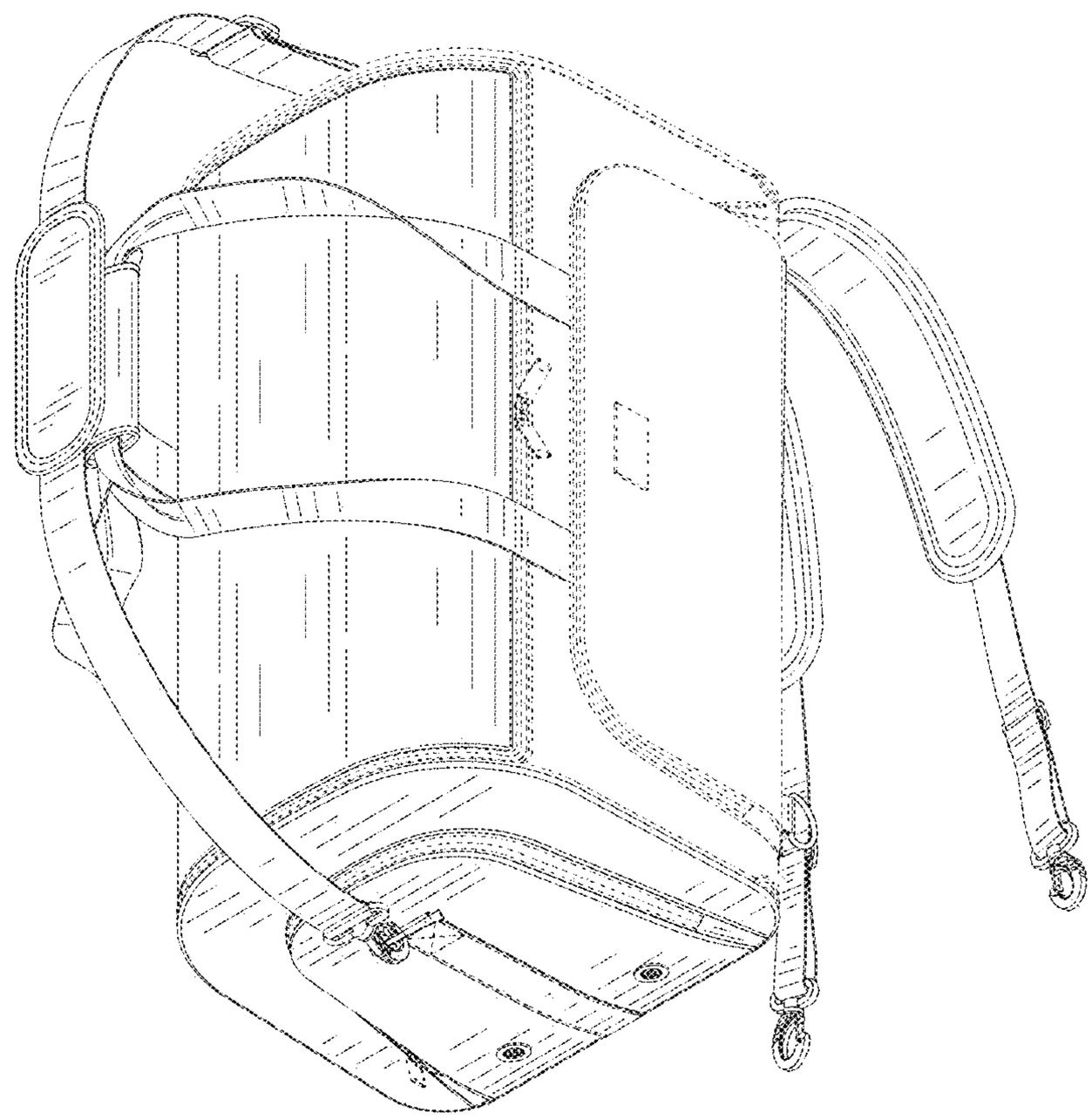

FIG. 11

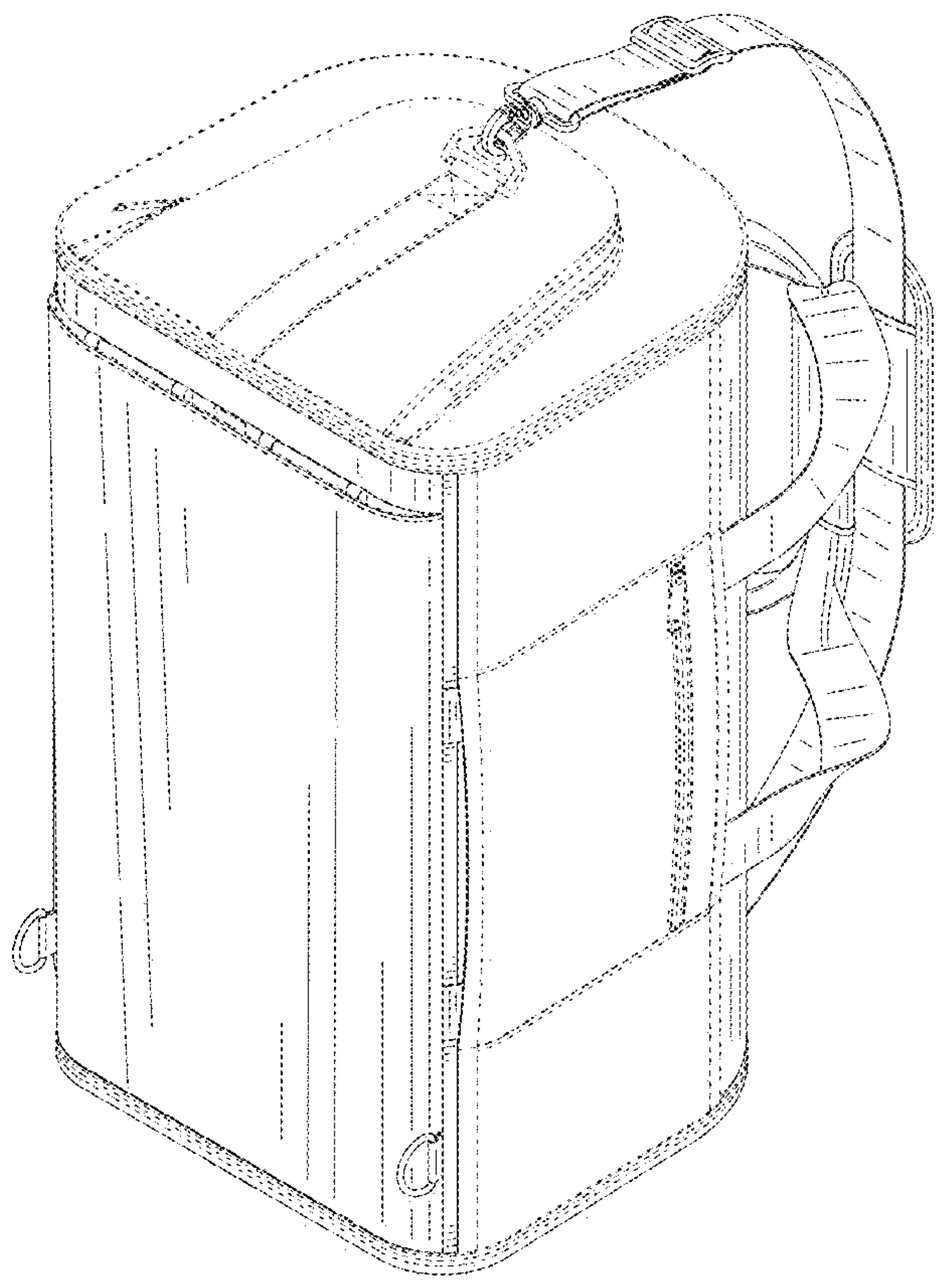

FIG. 12

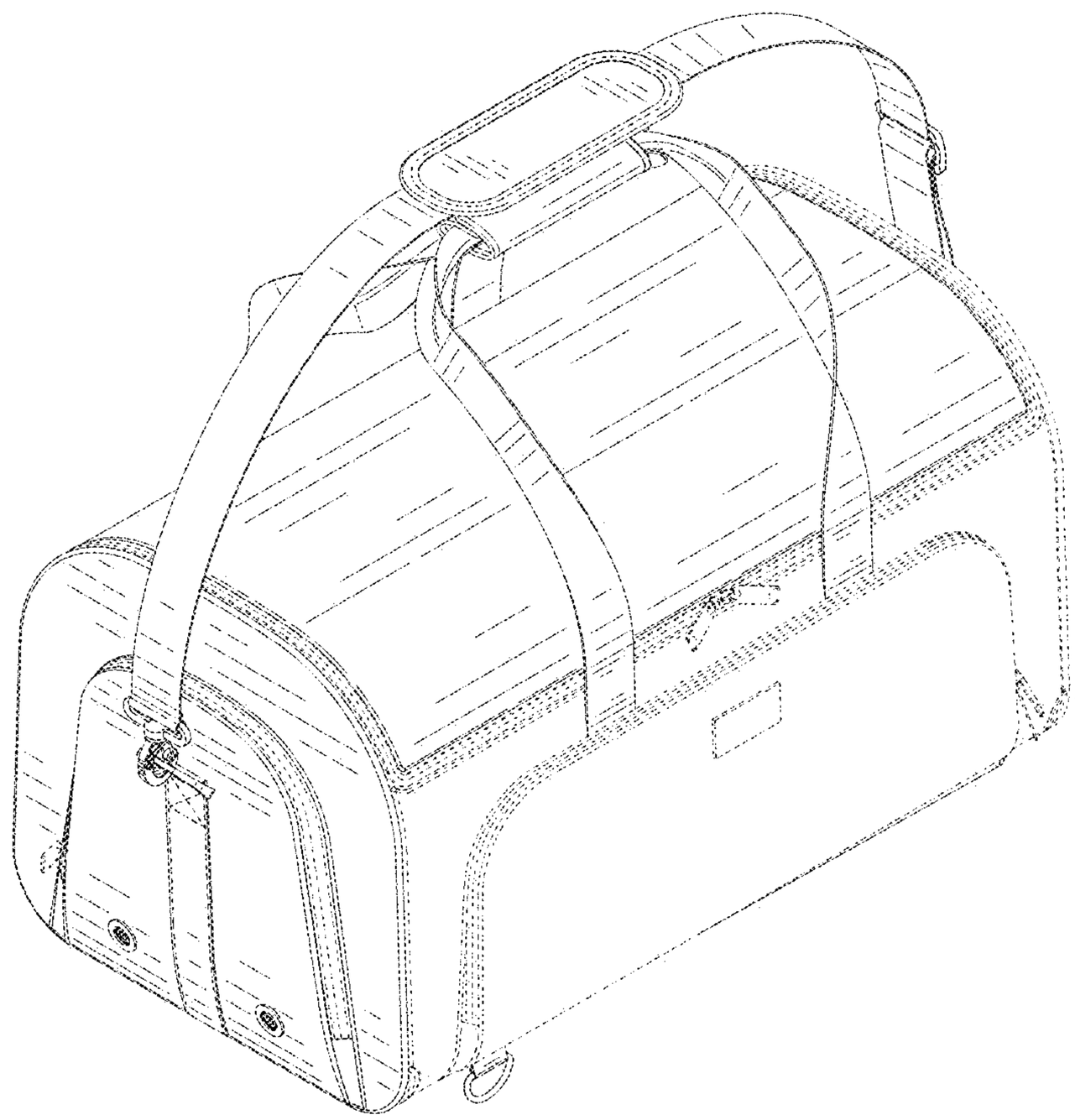

FIG. 13

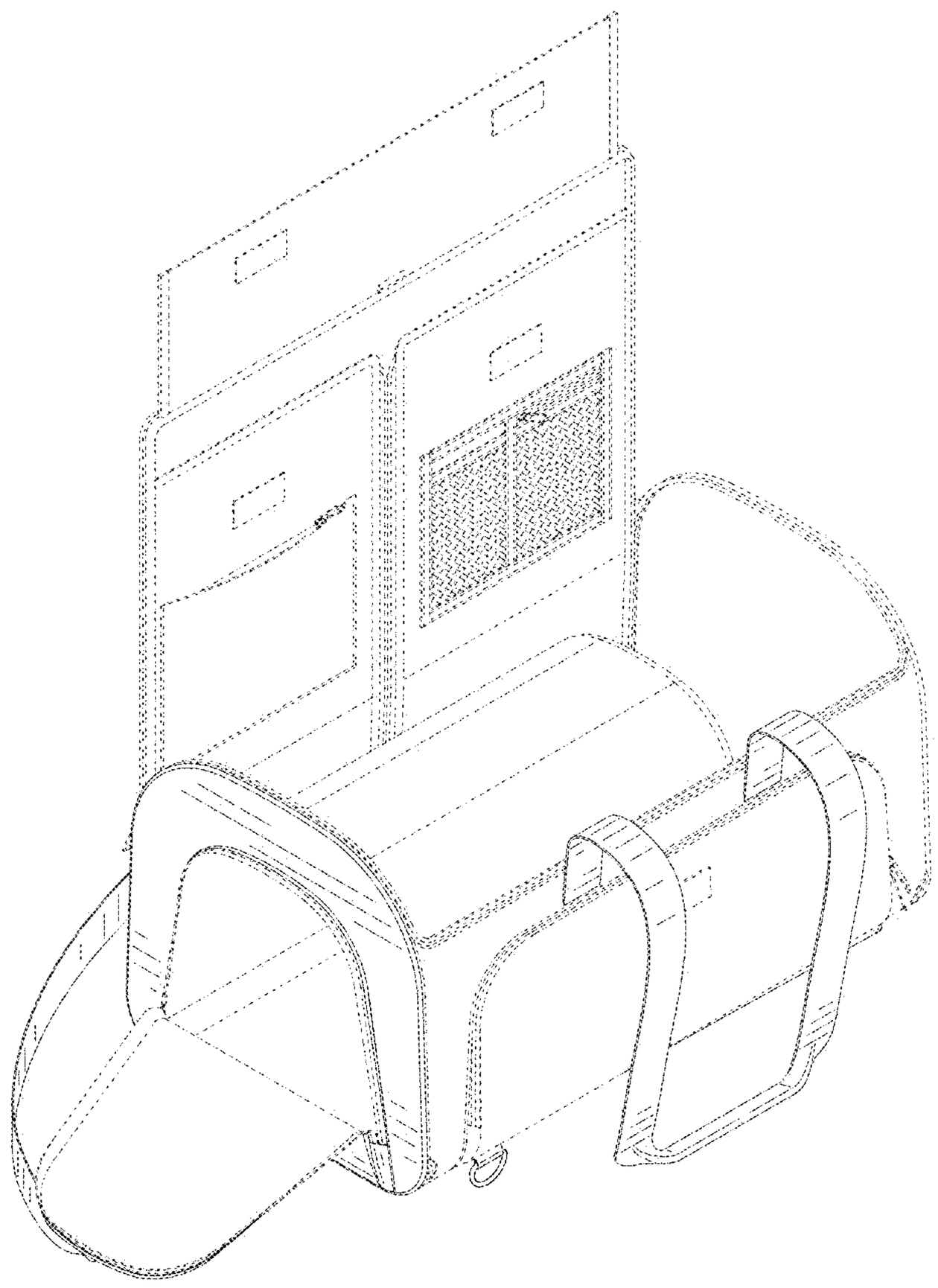

FIG. 14

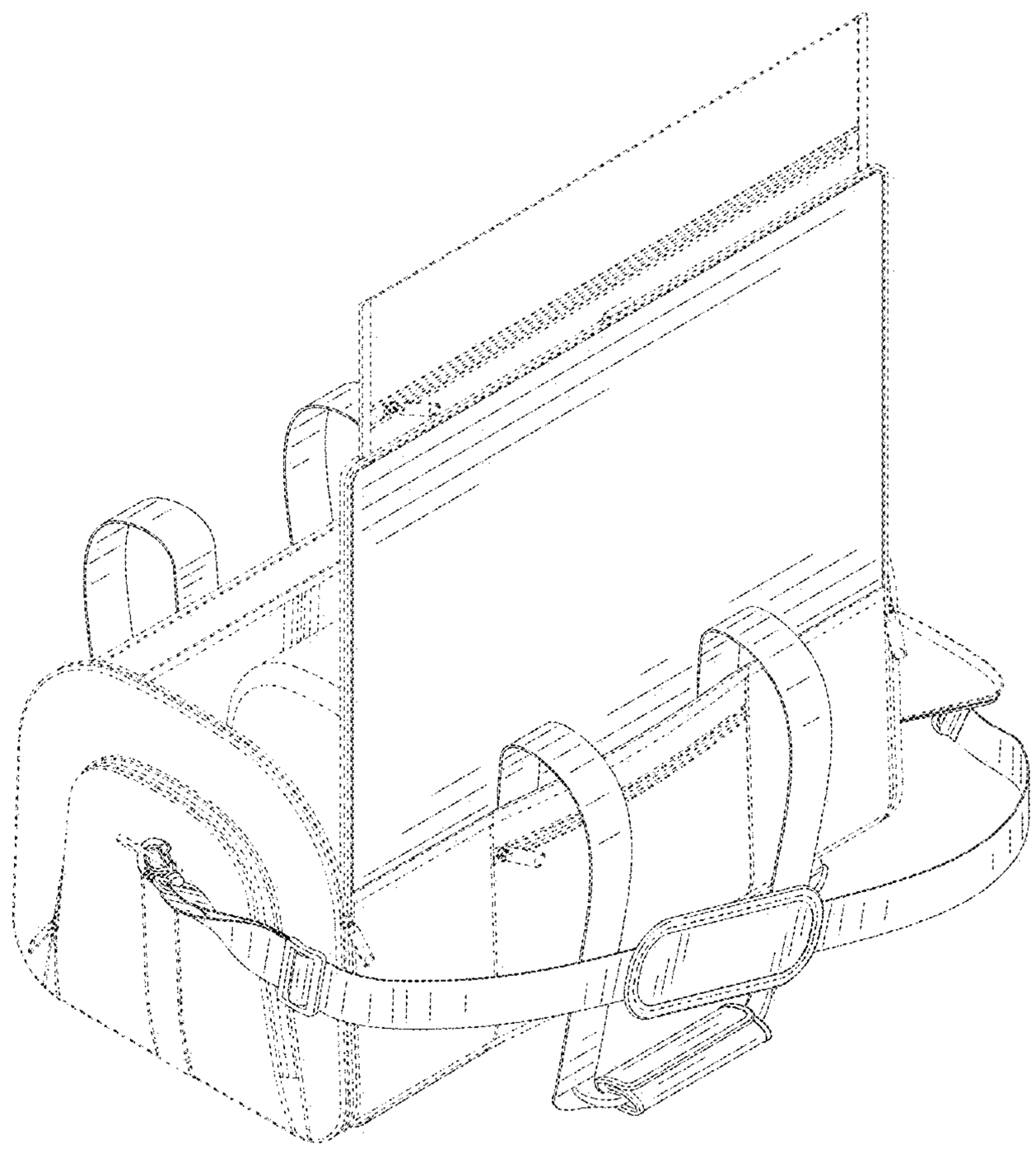

FIG. 15

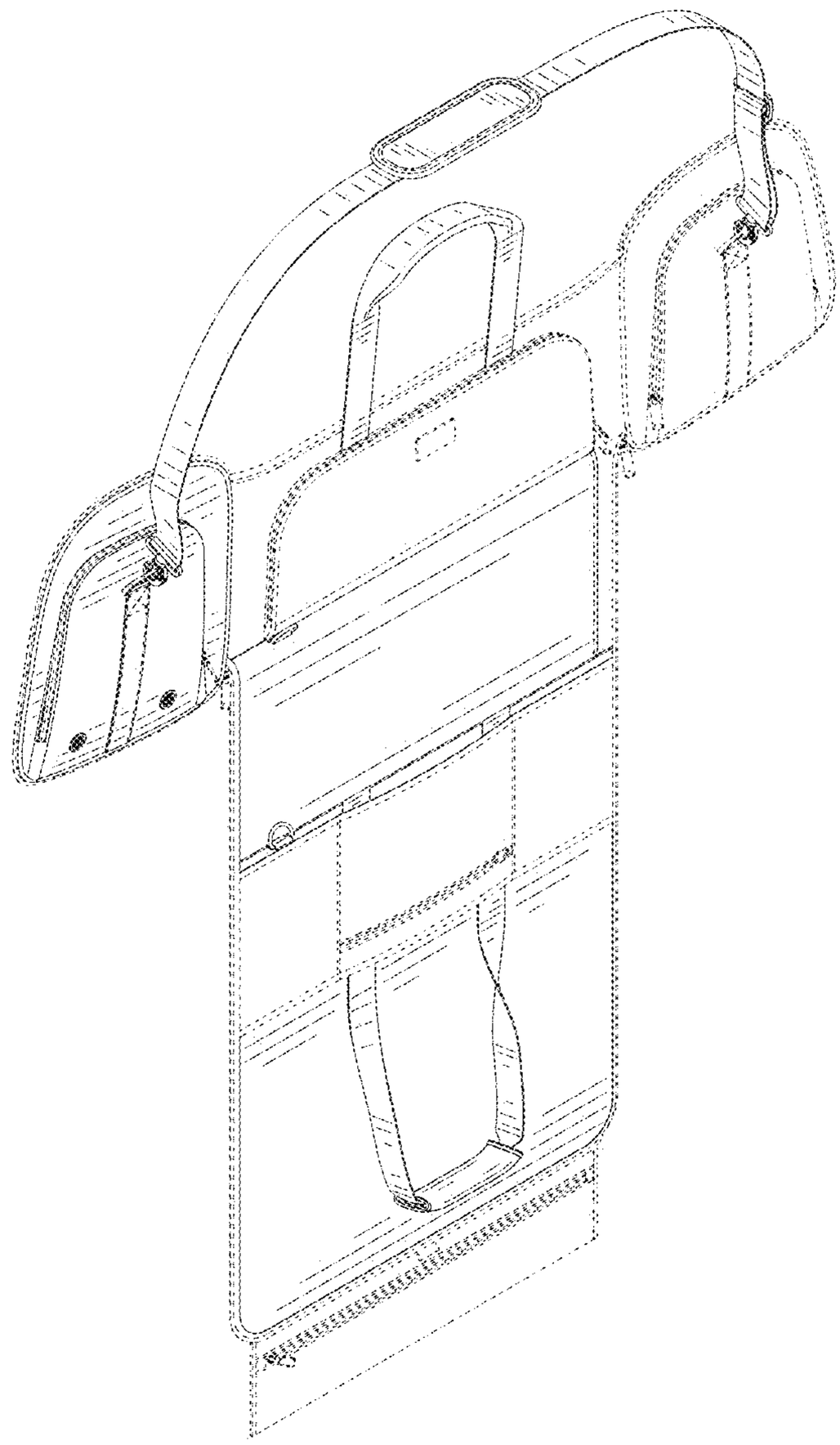

FIG. 16

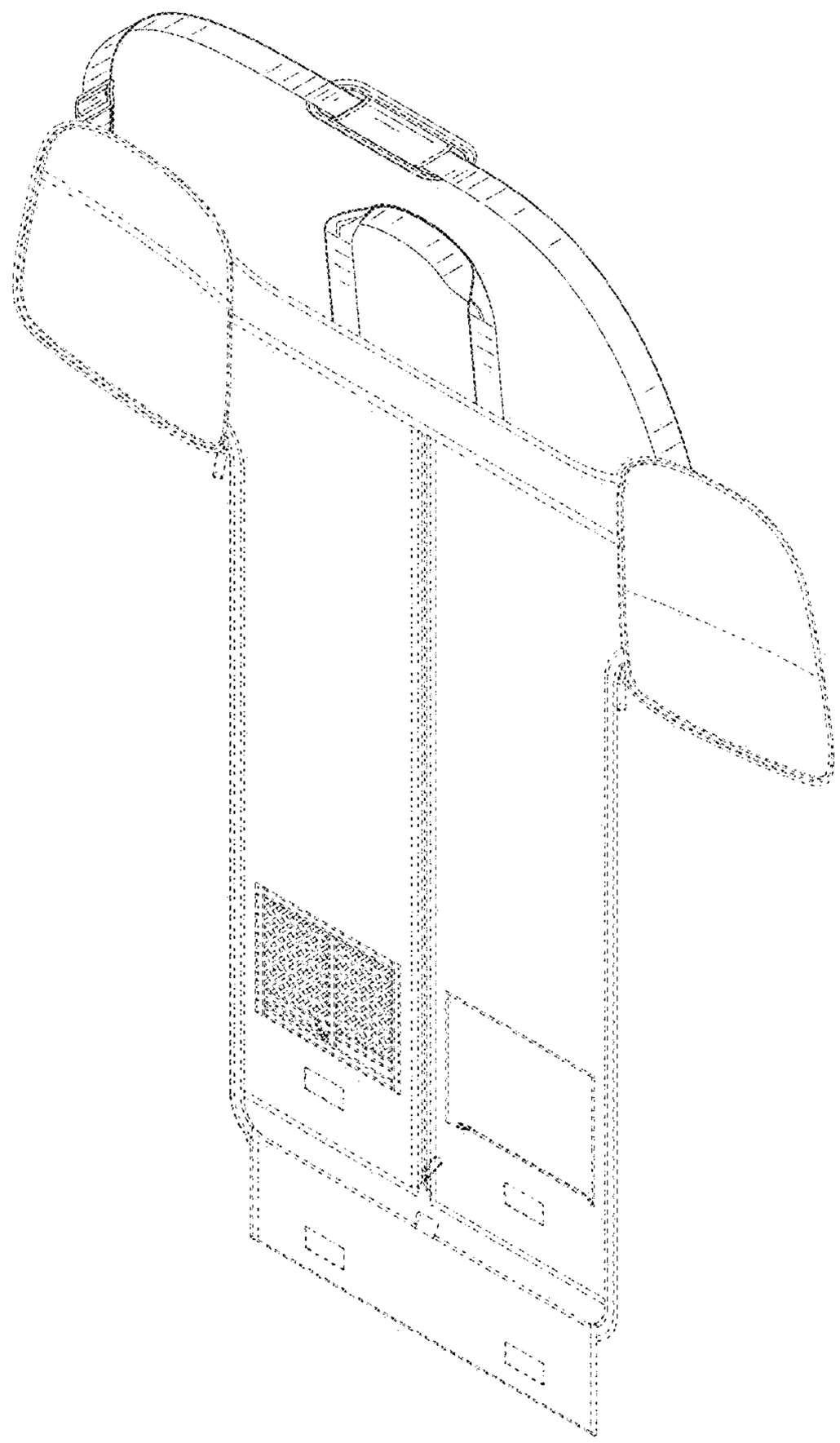

FIG. 17

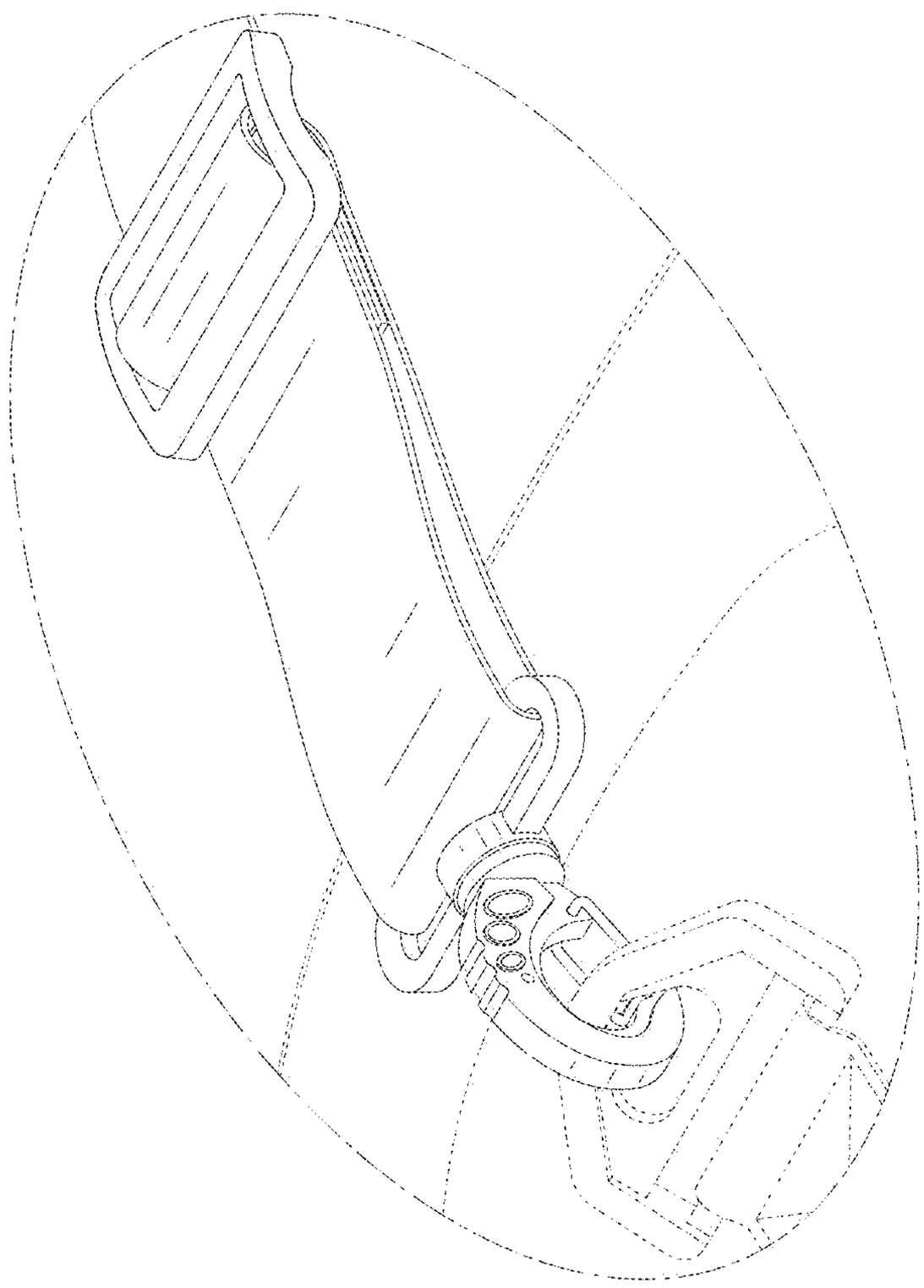

FIG. 18

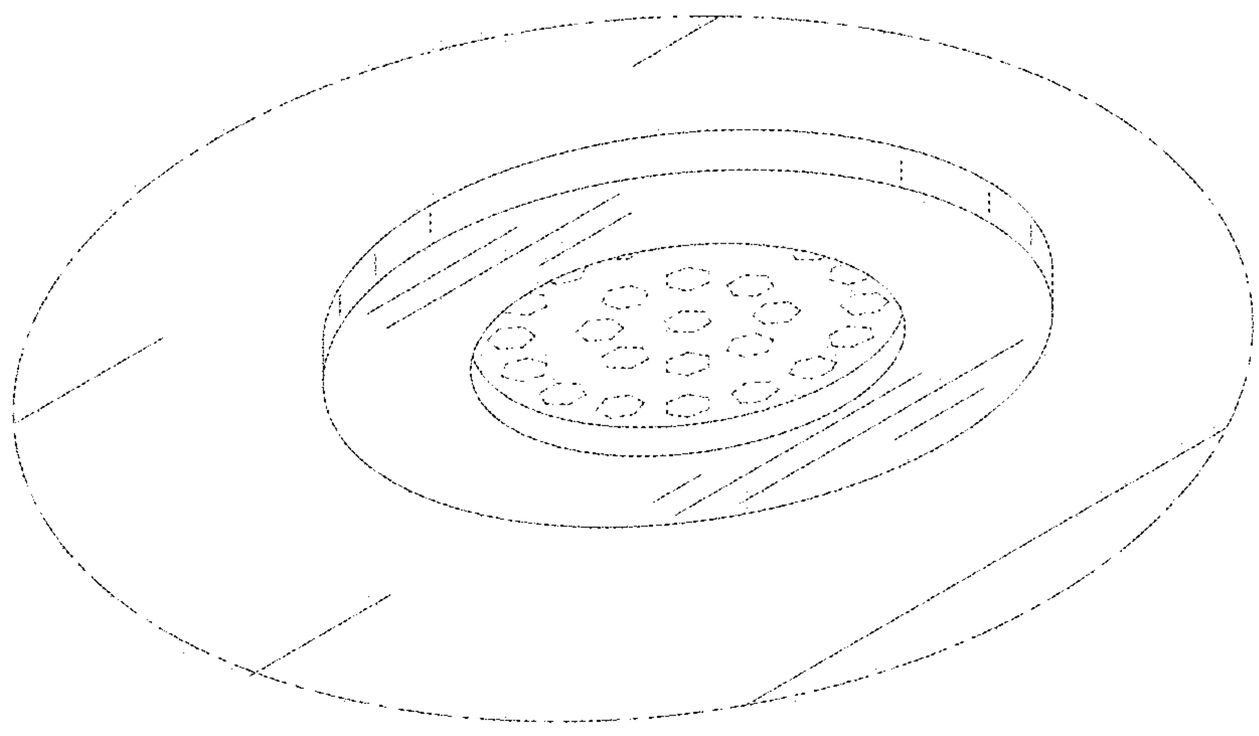

FIG. 19