US0D1011660S

(12) United States Design Patent

Park et al.

(10) Patent No.: US D1,011,660 S
(45) Date of Patent: ** Jan. 16, 2024

(54) **CLOTHING CARE MACHINE**

(71) Applicant: **Samsung Electronics Co., Ltd.**, Suwon-si (KR)

(72) Inventors: **Jinsook Park**, Suwon-si (KR); **Junkyo Lee**, Suwon-si (KR); **Jichang Kang**, Suwon-si (KR)

(73) Assignee: **SAMSUNG ELECTRONICS CO., LTD.**, Gyeonggi-Do (KR)

(**) Term: **15 Years**

(21) Appl. No.: **29/825,629**

(22) Filed: **Feb. 3, 2022**

(30) **Foreign Application Priority Data**

Aug. 4, 2021 (KR) 30-2021-0037070

(51) **LOC (14) Cl.** **15-05**

(52) **U.S. Cl.**
USPC **D32/6**

(58) **Field of Classification Search**
USPC D32/1, 5, 9; D6/559, 560, 561, 662, D6/662.1, 663, 703, 703.2
(Continued)

(56) **References Cited**

U.S. PATENT DOCUMENTS

2,703,973 A * 3/1955 Fawcett D06F 73/02 223/51
D512,081 S * 11/2005 Chang D15/81
(Continued)

FOREIGN PATENT DOCUMENTS

DE 40201731-0002 6/2021
WO WO-2020105864 A1 * 5/2020 ..... D06F 58/12

OTHER PUBLICATIONS

Steam Closet, posted Apr. 21, 2021 [online], [retrieved May 31, 2023]. Retrieved from internet, https://www.amazon.com/LG-Household-Deodorize-Technology-S3WFBN/dp/B0932M7GH9/ref=sr_1_2_sspa?keywords=clothing%2Bsteamer%2Bcloset&qid=1685551817&sr=8-2-spons&spLa=ZW5jcnlwdGVkUXVhbGlmaWVyPUExWUwxTEU3ODBXTE5PJmVuY3J5c (Year: 2021).*

(Continued)

Primary Examiner — Khawaja Anwar
Assistant Examiner — Taylor O Mortorff
(74) *Attorney, Agent, or Firm* — CANTOR COLBURN LLP

(57) **CLAIM**

The ornamental design for a clothing care machine, as shown and described.

DESCRIPTION

FIG. **1** is a front perspective view of a clothing care machine, showing our new design;
FIG. **2** is a front view thereof;
FIG. **3** is a rear view thereof;
FIG. **4** is a left-side view thereof;
FIG. **5** is a right-side view thereof;
FIG. **6** is a top view thereof;
FIG. **7** is a bottom view thereof;
FIG. **8** is an enlarged perspective view of a shutter portion in FIG. **1**;
FIG. **9** is a front perspective view of the clothing care machine in an alternate position;
FIG. **10** is a front view thereof;
FIG. **11** is a rear view thereof;
FIG. **12** is a left-side view thereof;
FIG. **13** is a right-side view thereof;
FIG. **14** is a top view thereof;
FIG. **15** is a bottom view thereof; and,
FIG. **16** is an enlarged perspective view of a shutter portion in FIG. **9**.
The broken lines illustrating portions of the clothing care machine form no part of the claimed design.

1 Claim, 16 Drawing Sheets

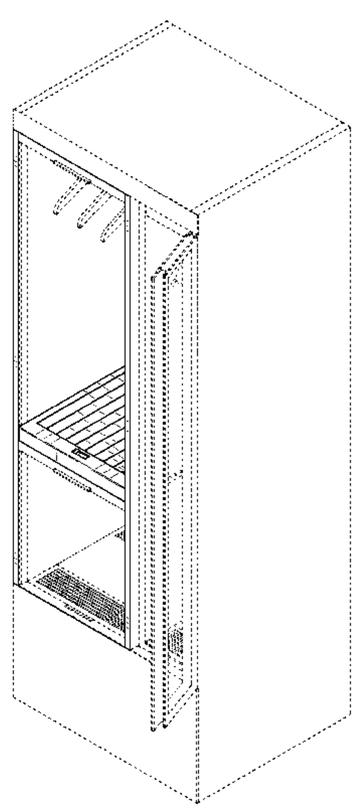

(58) **Field of Classification Search**
CPC D06F 73/02; D06F 58/10; D06F 2103/34; D06F 2105/40; D06F 67/005
See application file for complete search history.

(56) **References Cited**

U.S. PATENT DOCUMENTS

8,484,860	B2 *	7/2013	Moon	D06F 58/10	38/14
8,484,861	B2 *	7/2013	Park	D06F 73/02	219/400
D711,936	S *	8/2014	Hynes	A47B 73/00	D15/89
8,925,357	B2 *	1/2015	Moon	D06F 58/20	68/6
D765,151	S *	8/2016	Park	D15/81	
D769,947	S *	10/2016	Lee	D15/89	
D770,543	S *	11/2016	Lee	D15/89	
D770,544	S *	11/2016	Lee	D15/89	
D828,656	S *	9/2018	Chung	D32/6	
D892,874	S *	8/2020	Cho	F25D 25/025	D15/90
D895,912	S *	9/2020	Kim	D32/10	
D912,106	S *	3/2021	Diamond	D15/89	
11,060,237	B2 *	7/2021	Park	D06F 71/36	
2009/0241268	A1 *	10/2009	Yoo	D06F 73/02	8/149.3
2017/0342651	A1 *	11/2017	Choi	D06F 58/44	
2021/0062404	A1 *	3/2021	Ham	D06F 71/34	

OTHER PUBLICATIONS

Clothes Steamer, posted Apr. 21, 2021 [online], [retrieved May 31, 2023]. Retrieved from internet, https://www.amazon.com/LG-Household-Deodorize-Technology-S3MFBN/dp/B0932K1LR7/ref=sr_1_4?keywords=clothing%2Bsteamer%2Bcloset&qid=1685551817&sr=8-4&th=1 (Year: 2021).*

* cited by examiner

FIG. 1

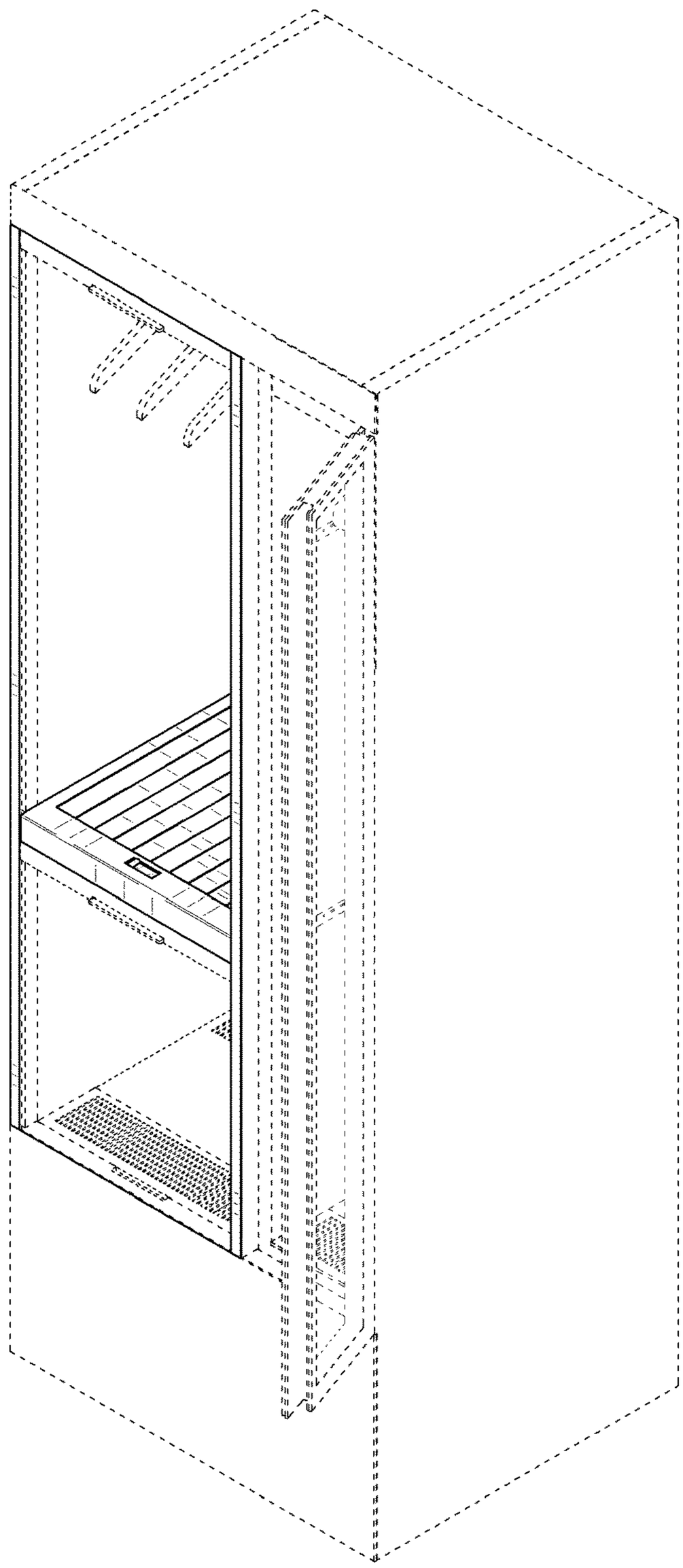

FIG. 2

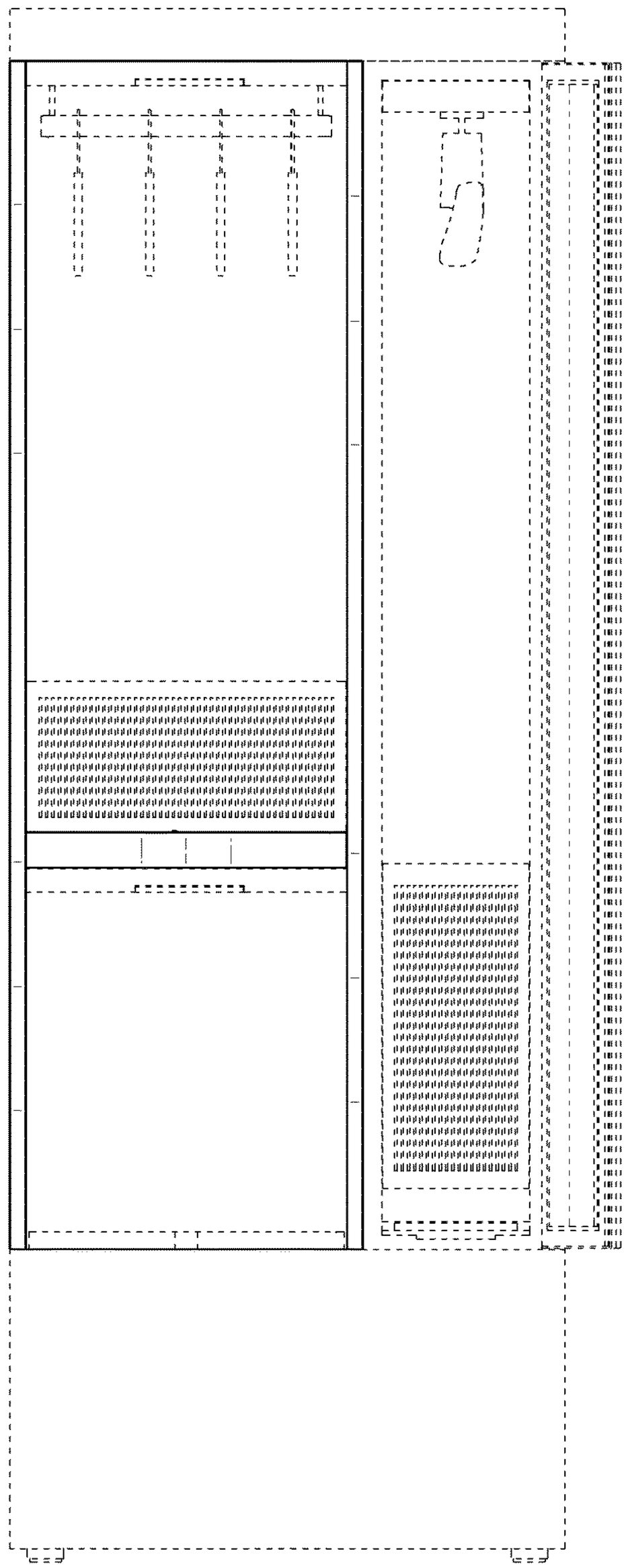

FIG. 3

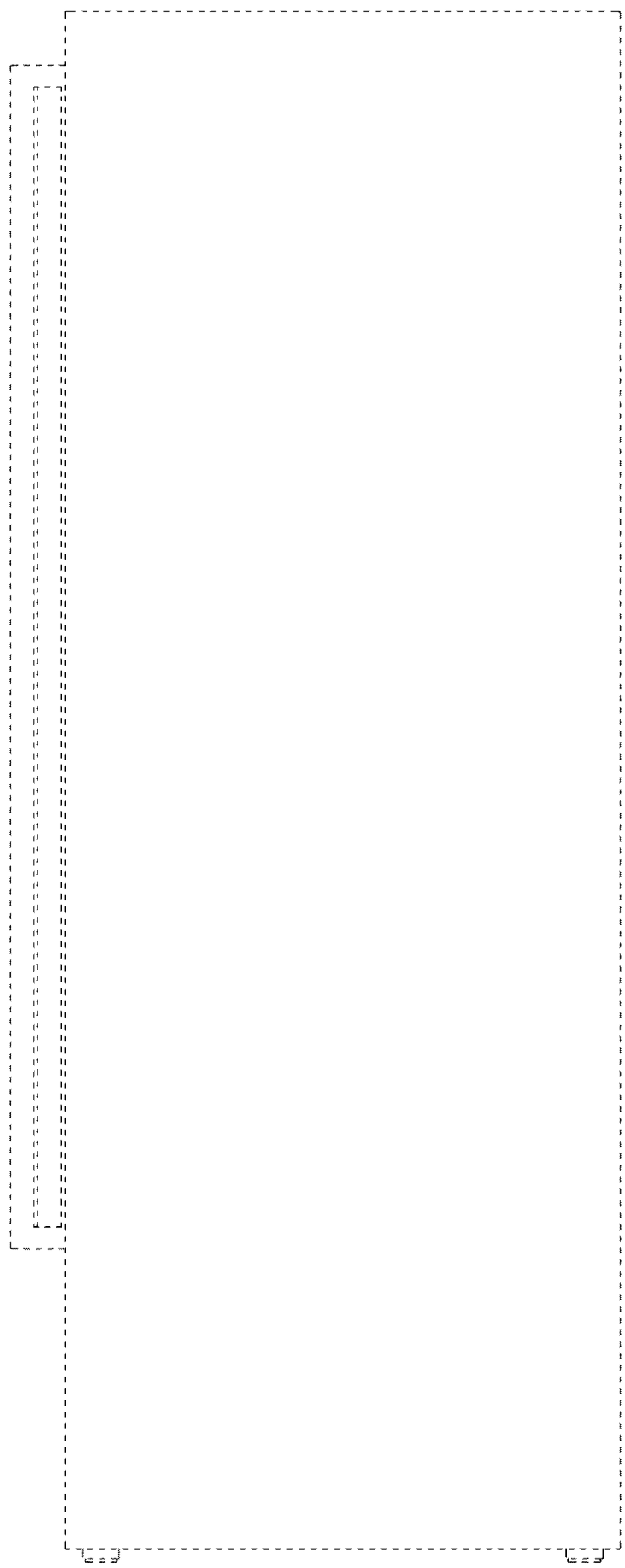

FIG. 4

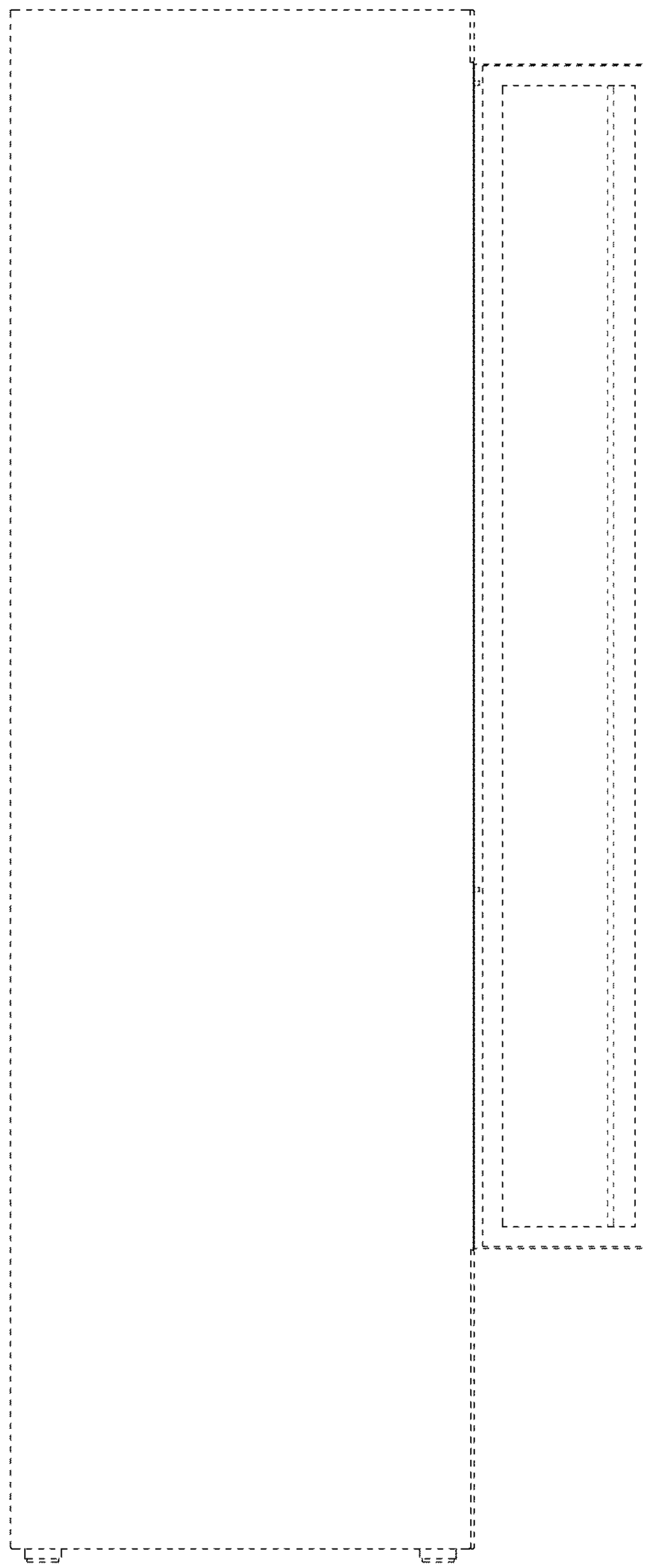

FIG. 5

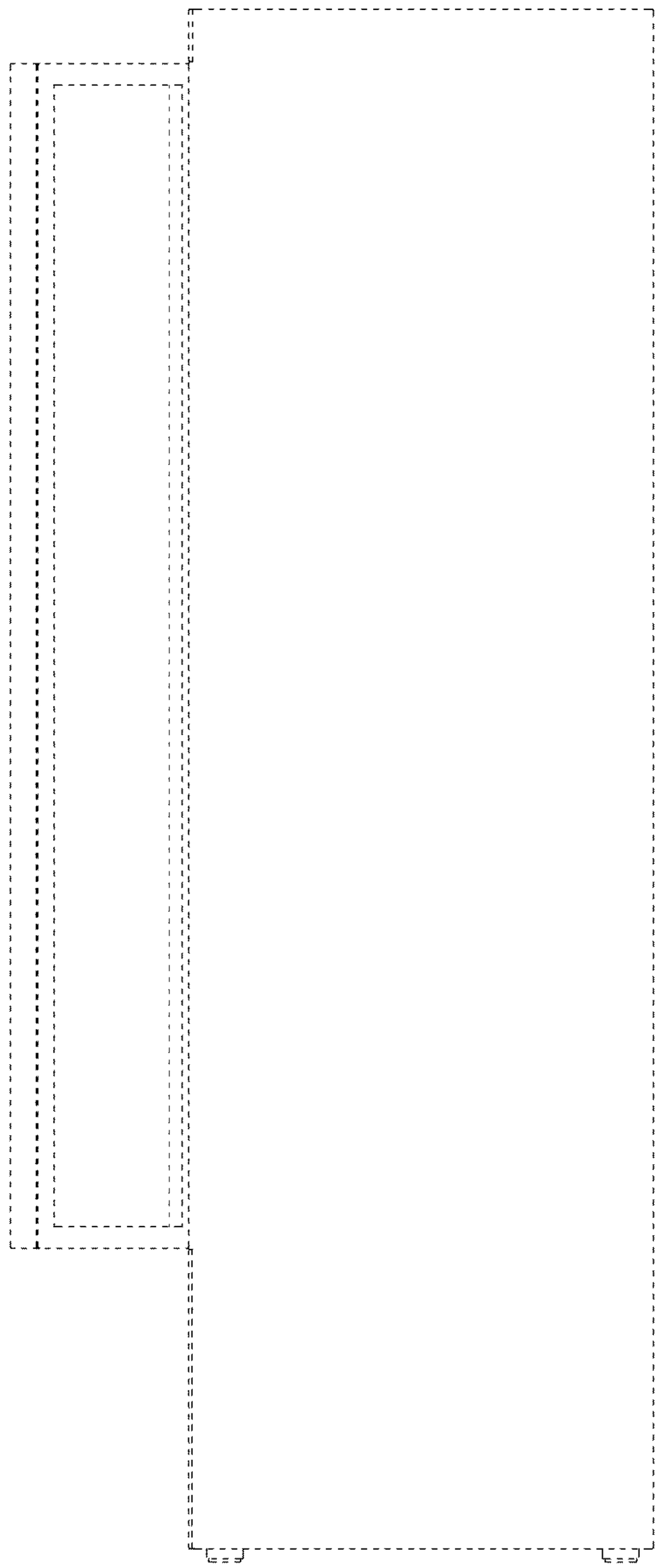

FIG. 6

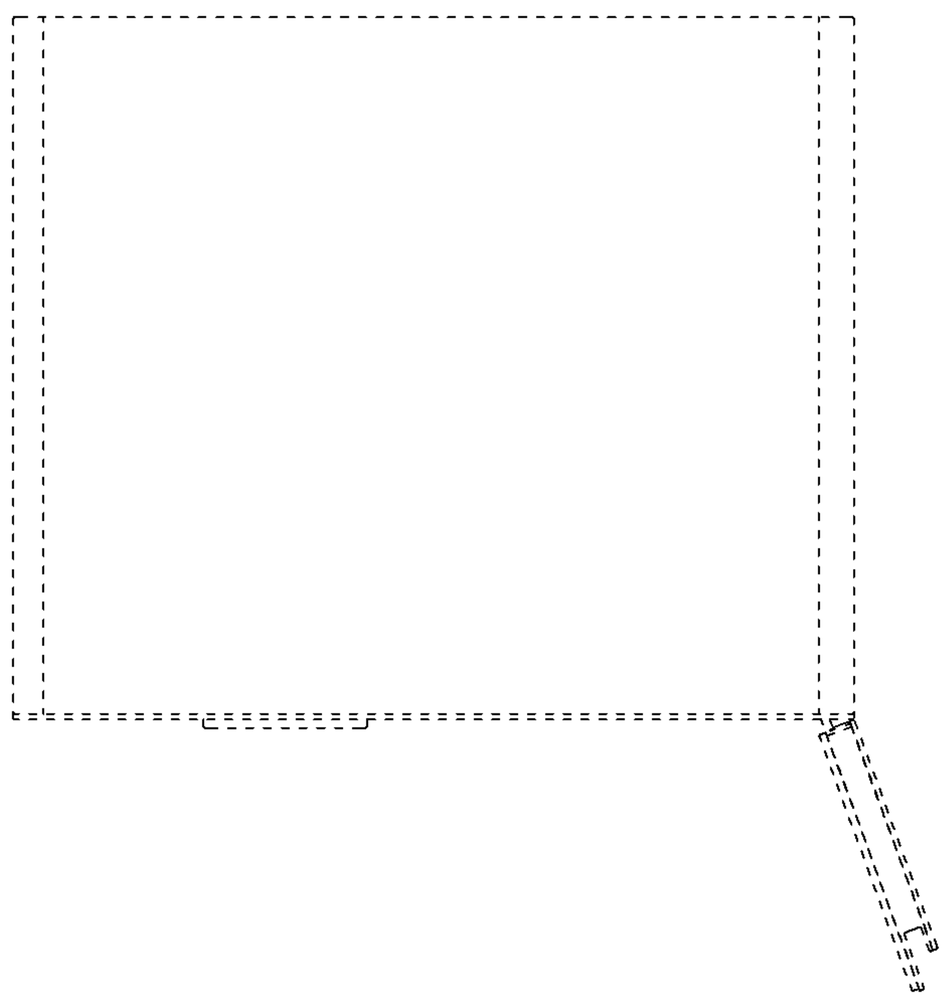

FIG. 7

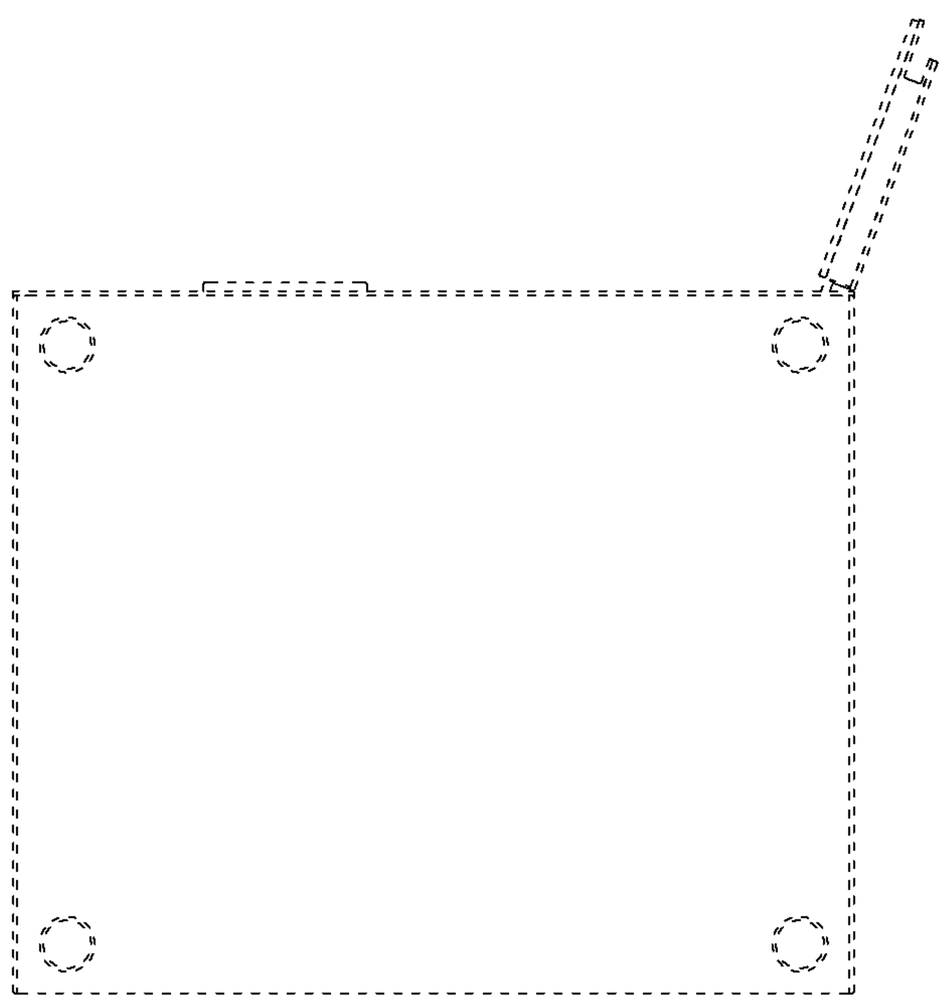

FIG. 8

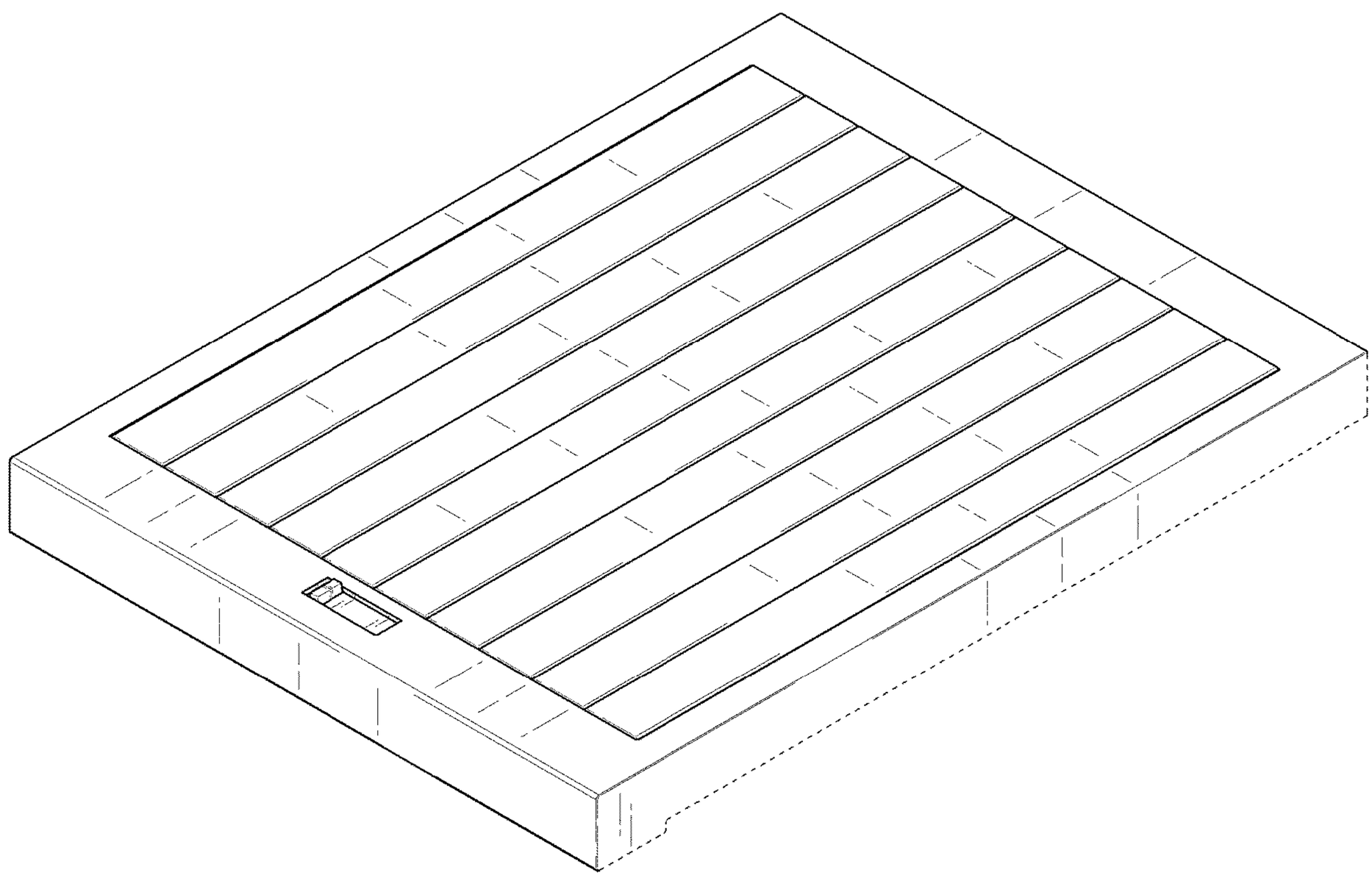

FIG. 9

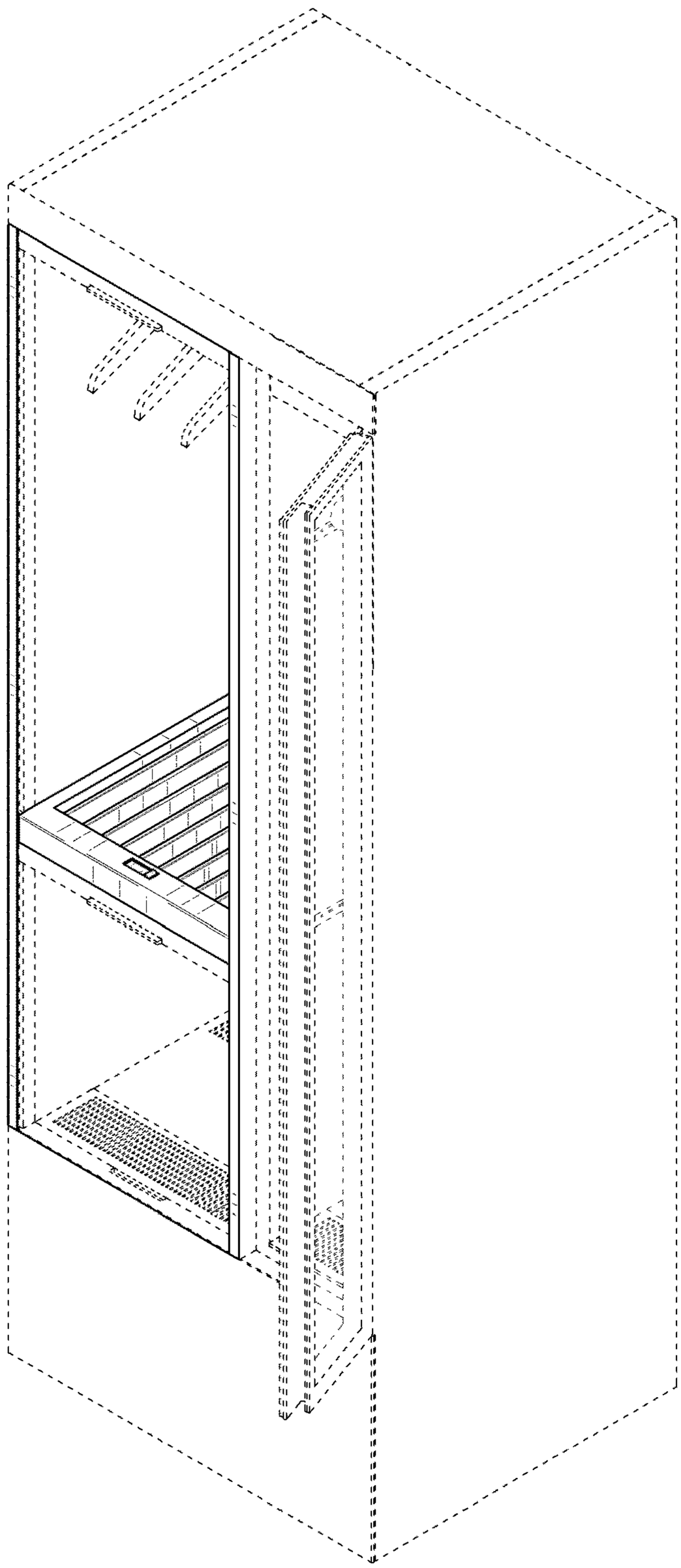

FIG. 10

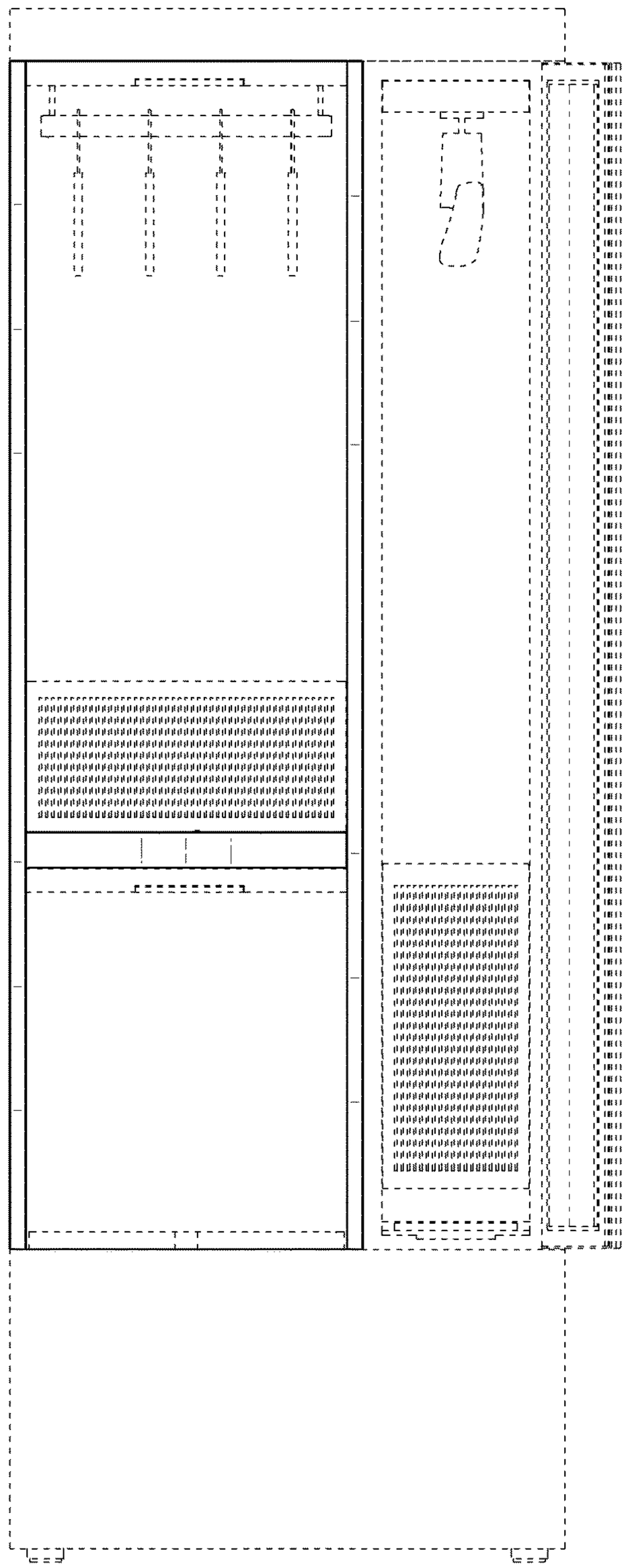

FIG. 11

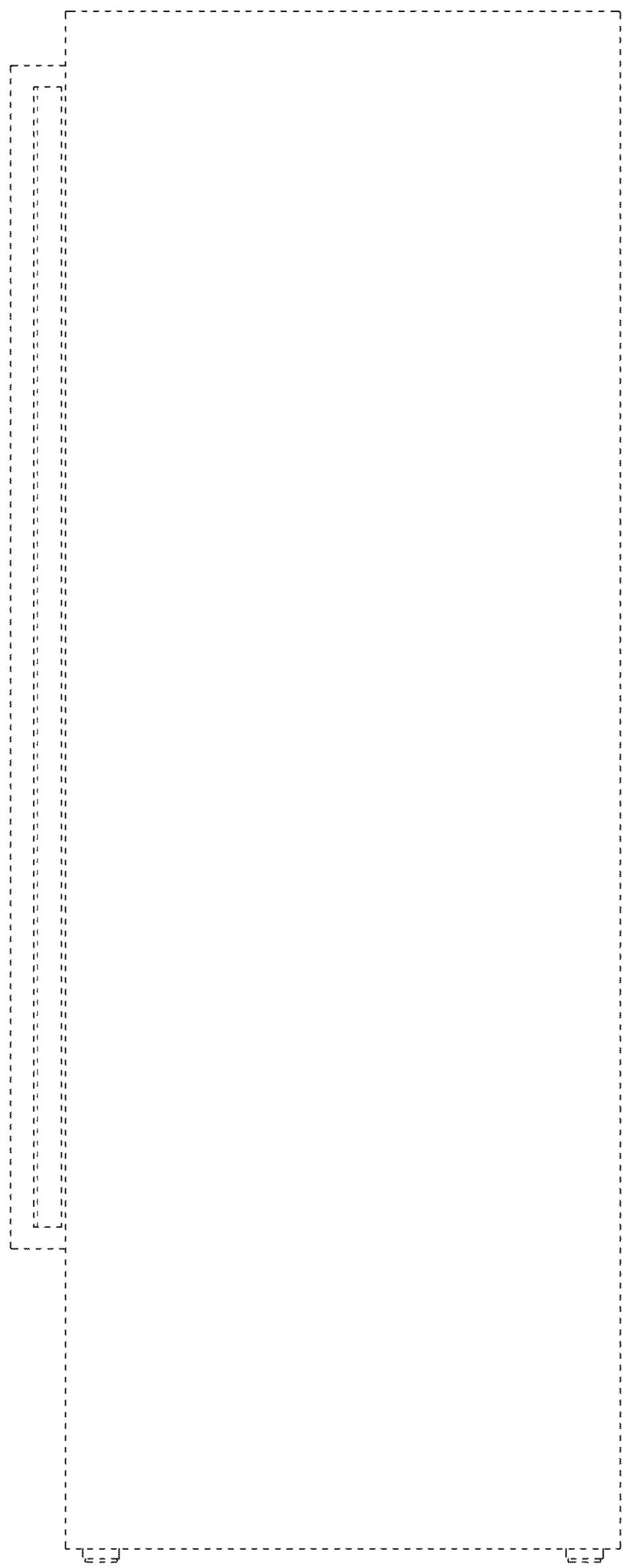

FIG. 12

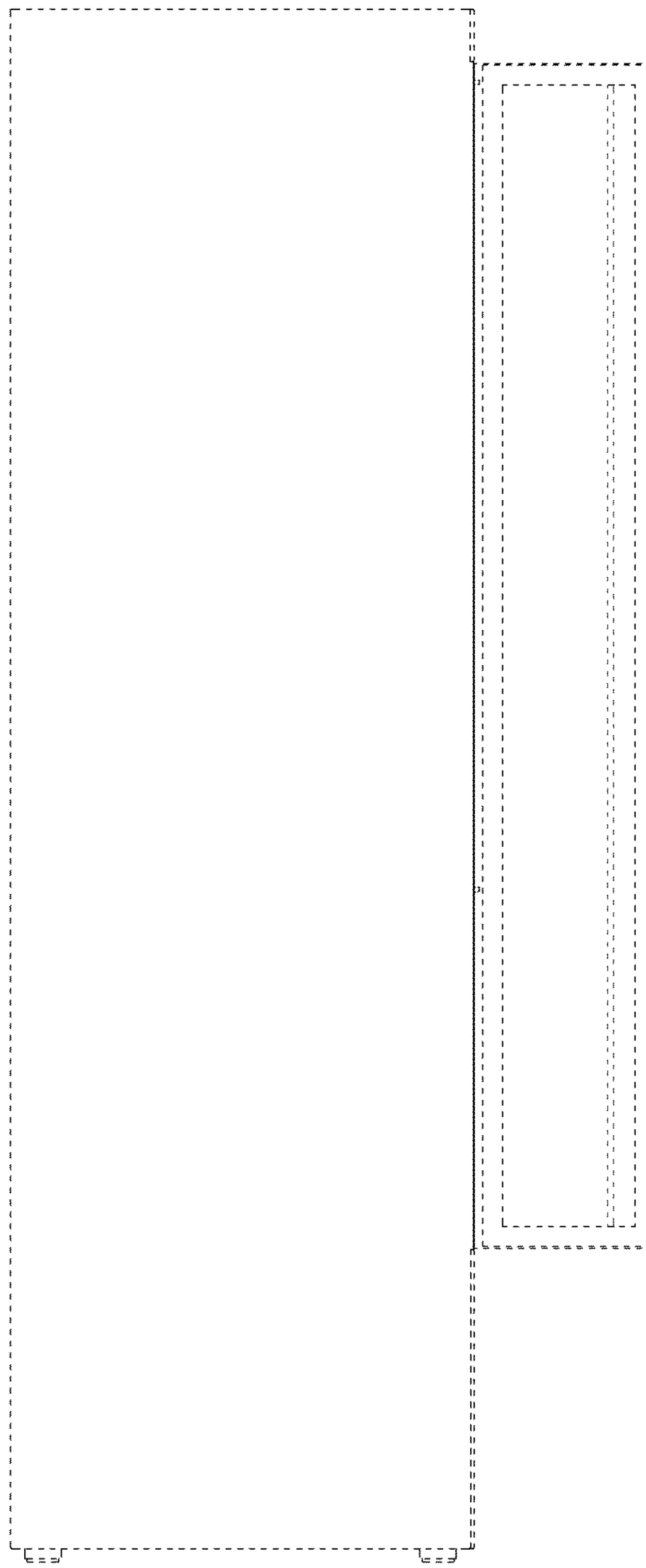

FIG. 13

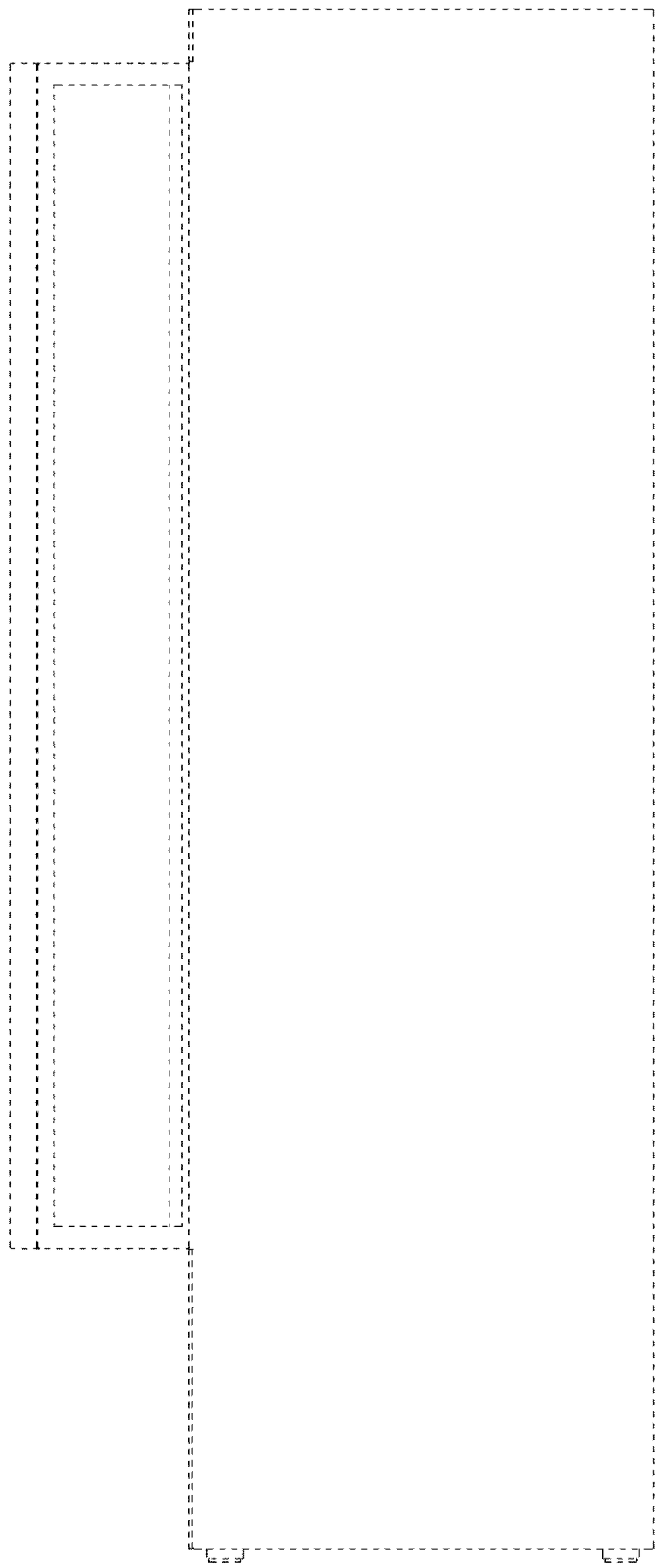

FIG. 14

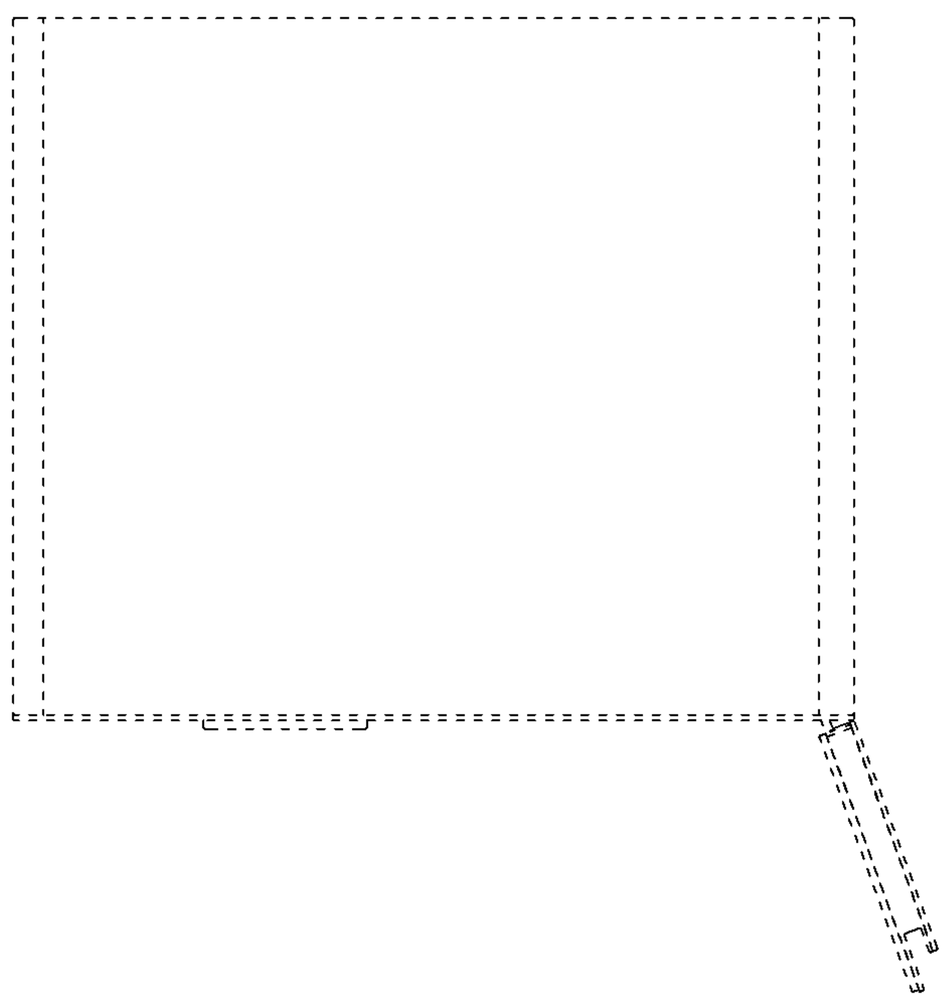

FIG. 15

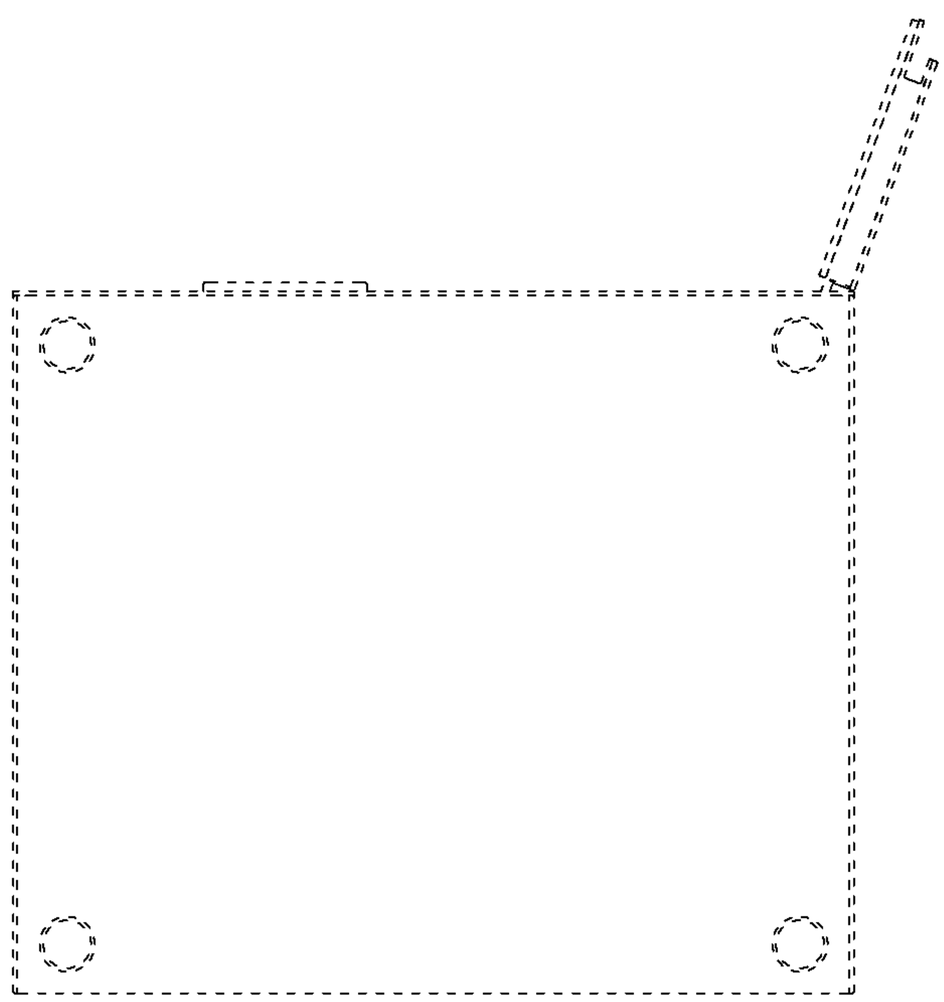
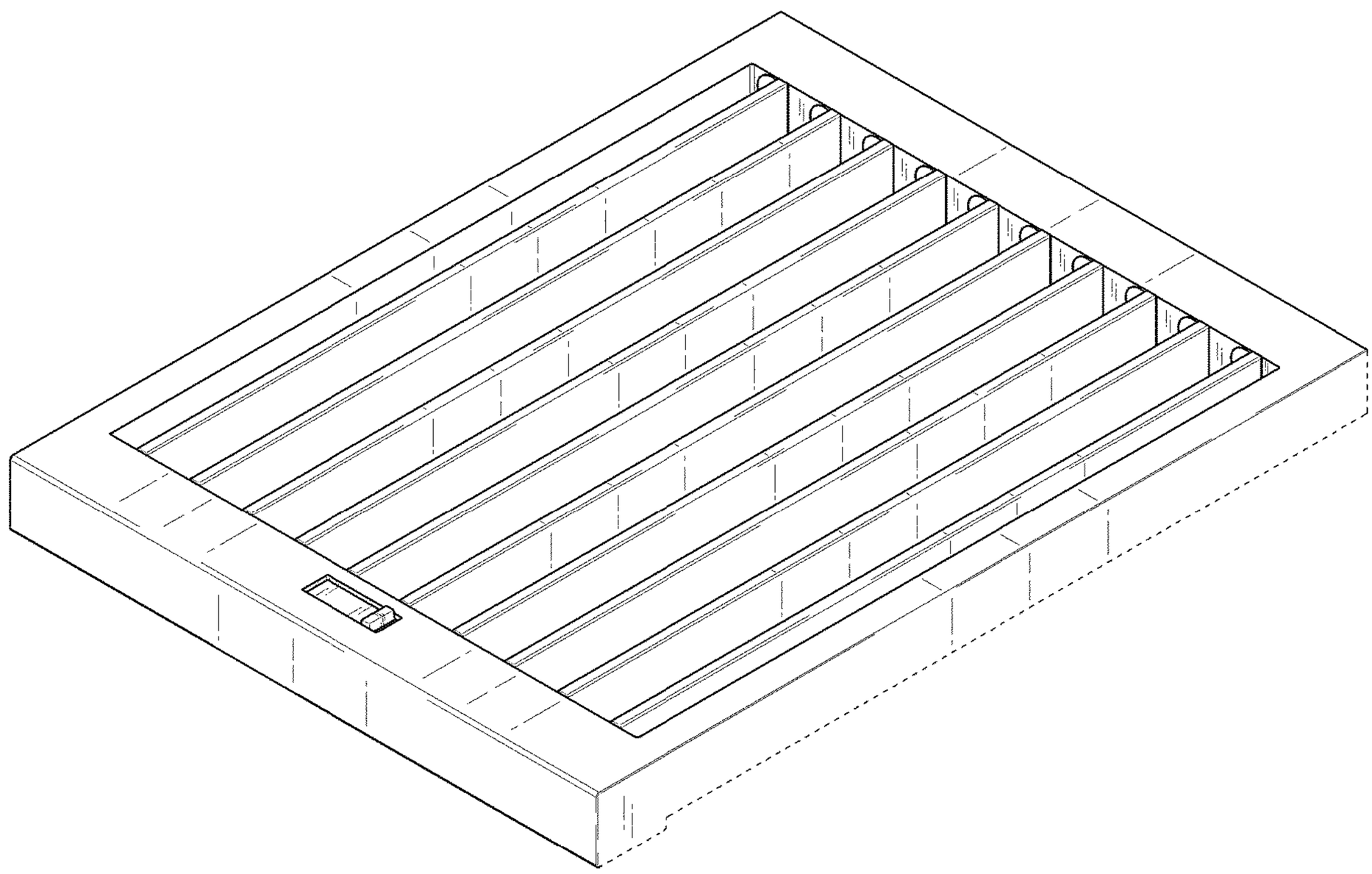
FIG. 16