US0D1009826S

(12) United States Design Patent

Billaudet et al.

(10) Patent No.: US D1,009,826 S
(45) Date of Patent: ** Jan. 2, 2024

(54) **HEADPHONES**

(71) Applicant: **Austrian Audio GmbH**, Vienna (AT)

(72) Inventors: **Patrice Billaudet**, Markt Piesting (AT); **Philipp Schuster**, Vienna (AT); **Bernhard Pinter**, Moosbrunn (AT)

(73) Assignee: **AUSTRIAN AUDIO GMBH**, Vienna (AT)

(**) Term: **15 Years**

(21) Appl. No.: **35/516,046**

(22) Filed: **Nov. 2, 2022**

(80) **Hague Agreement Data**

Int. Filing Date: **Nov. 2, 2022**
Int. Reg. No.: **DM/226040**
Int. Reg. Date: **Nov. 2, 2022**
Int. Reg. Pub. Date: **Jan. 20, 2023**

(51) **LOC (14) Cl.** **14-01**

(52) **U.S. Cl.**
USPC **D14/206**

(58) **Field of Classification Search**
USPC D14/206, 205, 226, 192; D29/112; 2/209; 381/380–381, 374, 375; 455/575.2; 181/129
CPC H04R 25/00; H04R 25/02; H04R 1/1066; H04R 1/1016; H04R 5/033; H04R 5/0335; H04R 1/1058; H04R 1/1083; H04R 3/14; H04R 1/1091; H04R 1/1041; A61F 11/14
See application file for complete search history.

(56) **References Cited**

U.S. PATENT DOCUMENTS

1,503,908 A * 8/1924 Manson H04R 1/1066 381/374
1,714,377 A * 5/1929 Kiernan H04R 1/10 381/374
3,488,457 A * 1/1970 Lahti H04R 1/1008 381/376
D246,259 S * 11/1977 Nishimura D14/205
D262,019 S * 11/1981 Upshaw D14/205
4,409,442 A * 10/1983 Kamimura H04R 5/0335 381/370
4,453,050 A * 6/1984 Enokido H04R 1/1066 381/381
5,185,807 A * 2/1993 Bergin H04R 1/1066 181/129
D347,434 S * 5/1994 Yamatogi D14/205
5,574,795 A * 11/1996 Seki H04R 5/0335 381/385
D391,573 S * 3/1998 Nakamura D14/205
D410,466 S * 6/1999 Mouri D14/205
6,006,115 A * 12/1999 Wingate H04M 1/6033 379/430
D431,550 S * 10/2000 Yoneda D14/205

(Continued)

FOREIGN PATENT DOCUMENTS

EM 008634927-0001 * 7/2021
JP D1746889 * 6/2023

Primary Examiner — Paula Allen Greene
(74) *Attorney, Agent, or Firm* — Raven Patents, LLC; Anton E. Skaugset

(57) **CLAIM**

The ornamental design for headphones, as shown and described.

DESCRIPTION

1. Headphones
1.1: Front perspective view
1.2: Front elevational view
1.3: Rear elevational view
1.4: Left side elevational view
1.5 Right side elevational view
1.6: Top plan view
1.7: Bottom plan view
1.8: rear perspective view

1 Claim, 8 Drawing Sheets

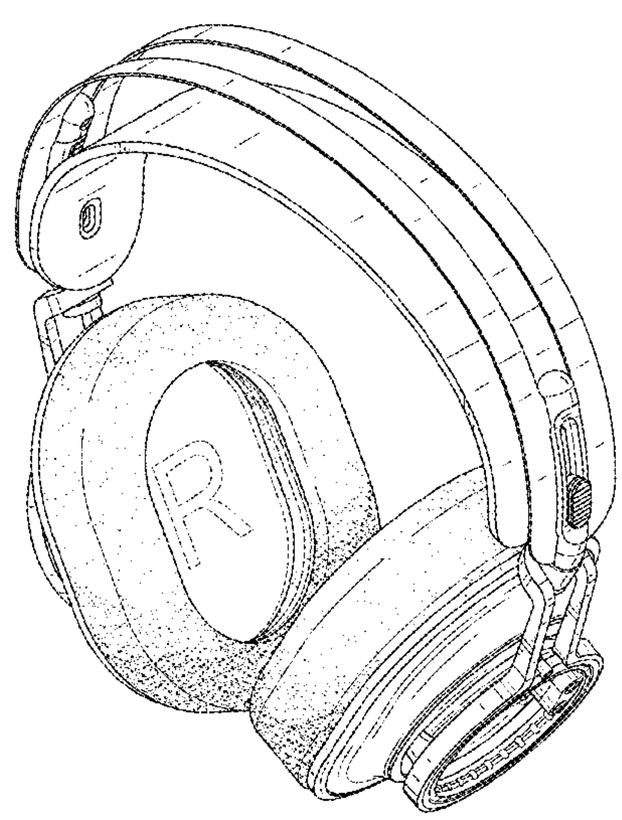

(56) **References Cited**

U.S. PATENT DOCUMENTS

D457,512 S * 5/2002 Yoneda H04R 5/0335 D14/205
6,678,897 B2 * 1/2004 Lindgren A61F 11/14 181/129
D525,237 S * 7/2006 Viduya D14/223
7,172,052 B2 * 2/2007 Lenhard-Backhaus H04R 1/1066 181/129
D556,187 S * 11/2007 Feng D14/205
D560,654 S * 1/2008 Feng D14/205
D563,382 S * 3/2008 Wikel D14/205
D567,215 S * 4/2008 Lee D14/205
D570,825 S * 6/2008 Schultz D14/205
D576,604 S * 9/2008 Suzuki D14/205
D587,683 S * 3/2009 Ham D14/205
D633,896 S * 3/2011 Kondo D14/205
D643,405 S * 8/2011 Rath D14/206
D661,685 S * 6/2012 Lee D14/205
8,325,962 B2 * 12/2012 Ishida H04R 5/0335 381/384
D695,263 S * 12/2013 Mogili D14/205
D722,590 S * 2/2015 Lu D14/205
D722,591 S * 2/2015 Son D14/205
D723,508 S * 3/2015 Garland D14/205
D724,560 S * 3/2015 Galler D14/205
D765,056 S * 8/2016 Yang D14/205
D769,219 S * 10/2016 Ohmachi D14/205
D810,718 S * 2/2018 Galler D14/205
D849,712 S * 5/2019 Billaudet D14/205
D851,622 S * 6/2019 Billaudet D14/205
D886,078 S * 6/2020 He D14/206
D890,129 S * 7/2020 Liu D14/206
D891,399 S * 7/2020 Chen D14/206
D910,593 S * 2/2021 Schuster D14/205
D914,637 S * 3/2021 Shen D14/206
D953,292 S * 5/2022 Zhang D14/206
D991,214 S * 7/2023 Roberts, Jr. D14/205
11,735,154 B2 * 8/2023 Karasawa H04R 1/1075 381/370
2014/0016812 A1 * 1/2014 Willberg H04R 1/1091 381/374
2017/0019728 A1 * 1/2017 Cochran H04R 1/1091
2017/0246038 A1 * 8/2017 Sjöman H01Q 1/273
2017/0366893 A1 * 12/2017 Karasawa H04R 1/1008
2020/0396532 A1 * 12/2020 Bui H04R 1/1083
2021/0219646 A1 * 7/2021 Samuel, Jr. A42B 3/12
2022/0360884 A1 * 11/2022 Eggert-Richter H01Q 9/42
2023/0179900 A1 * 6/2023 Tseng H04R 1/1058 381/378
2023/0225905 A1 * 7/2023 Kårekull A61F 11/145 381/72

* cited by examiner

1.1

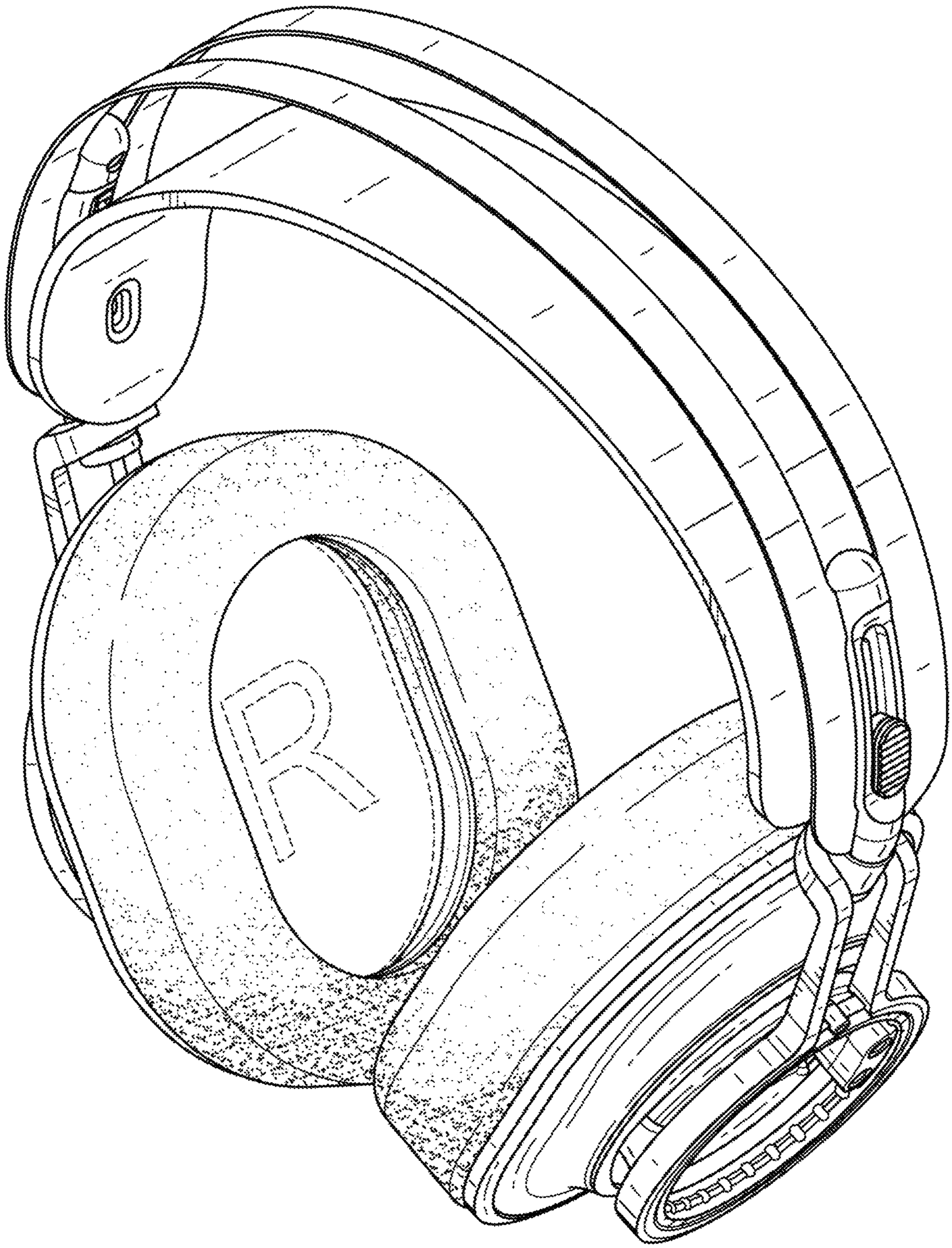

1.2

1.3

1.4

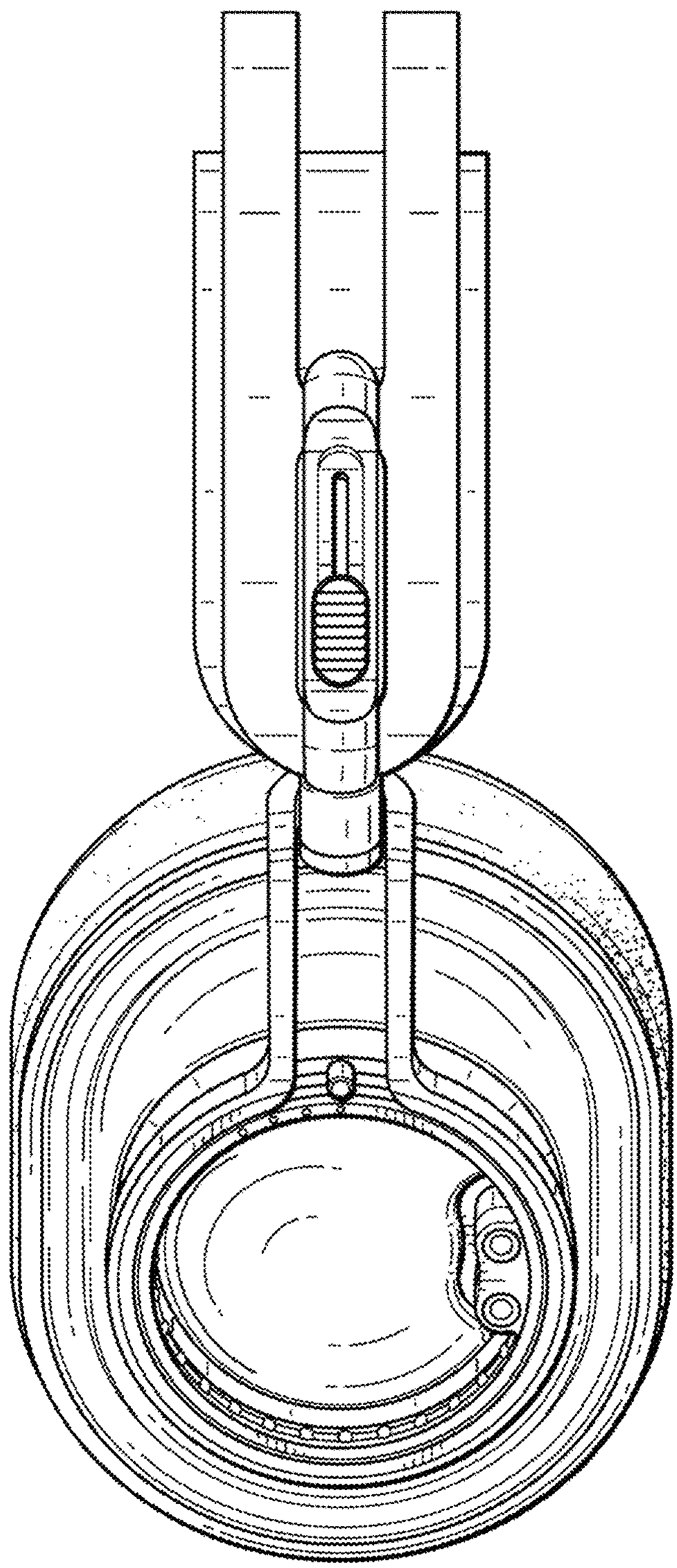

1.5

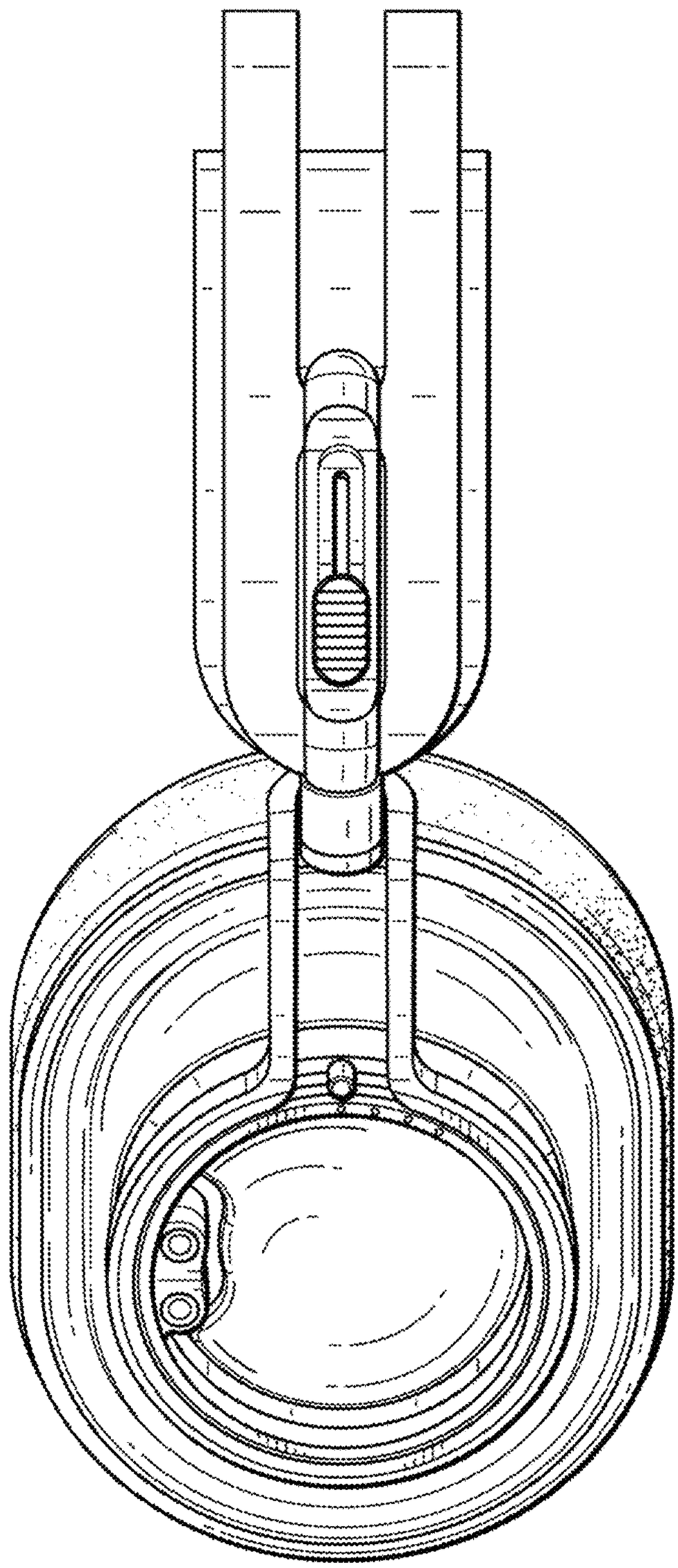

1.6

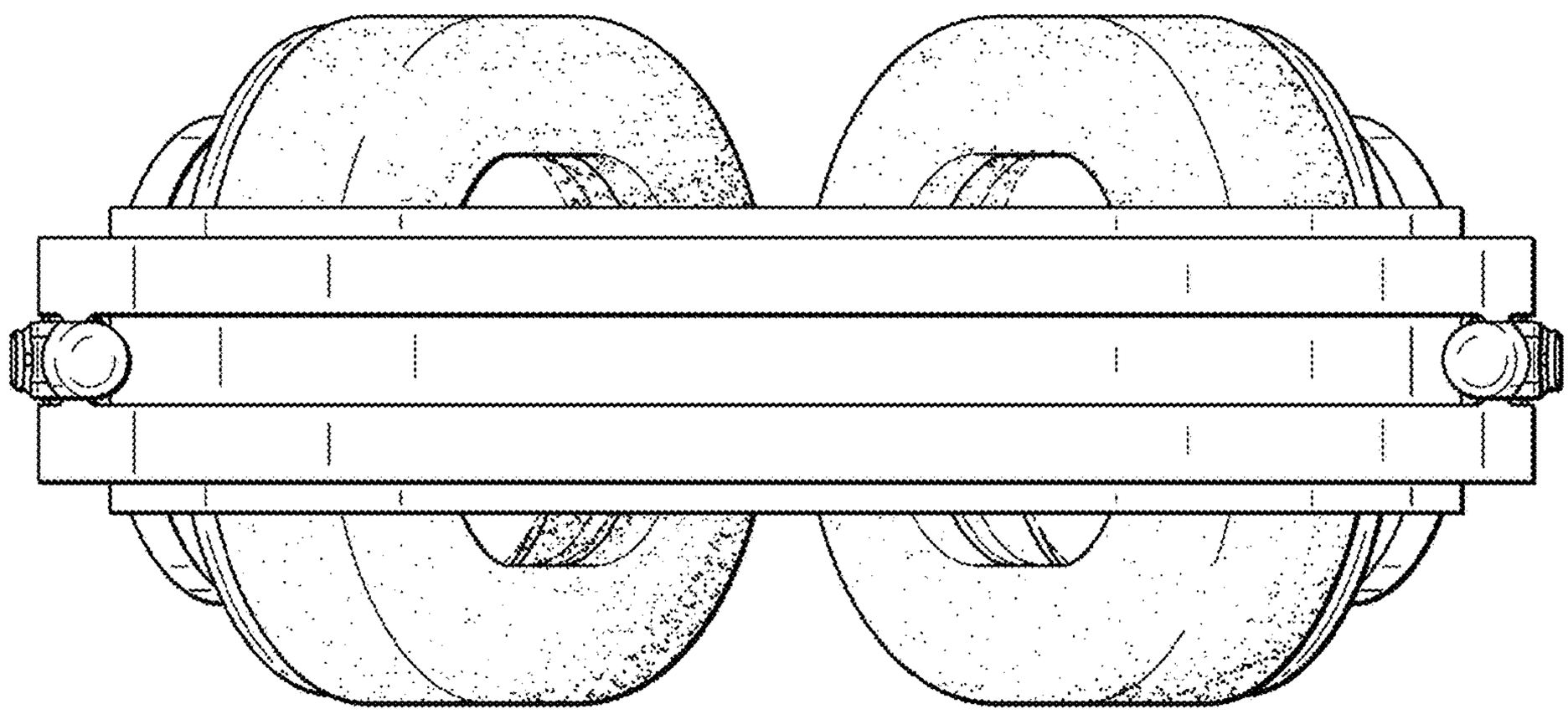

1.7

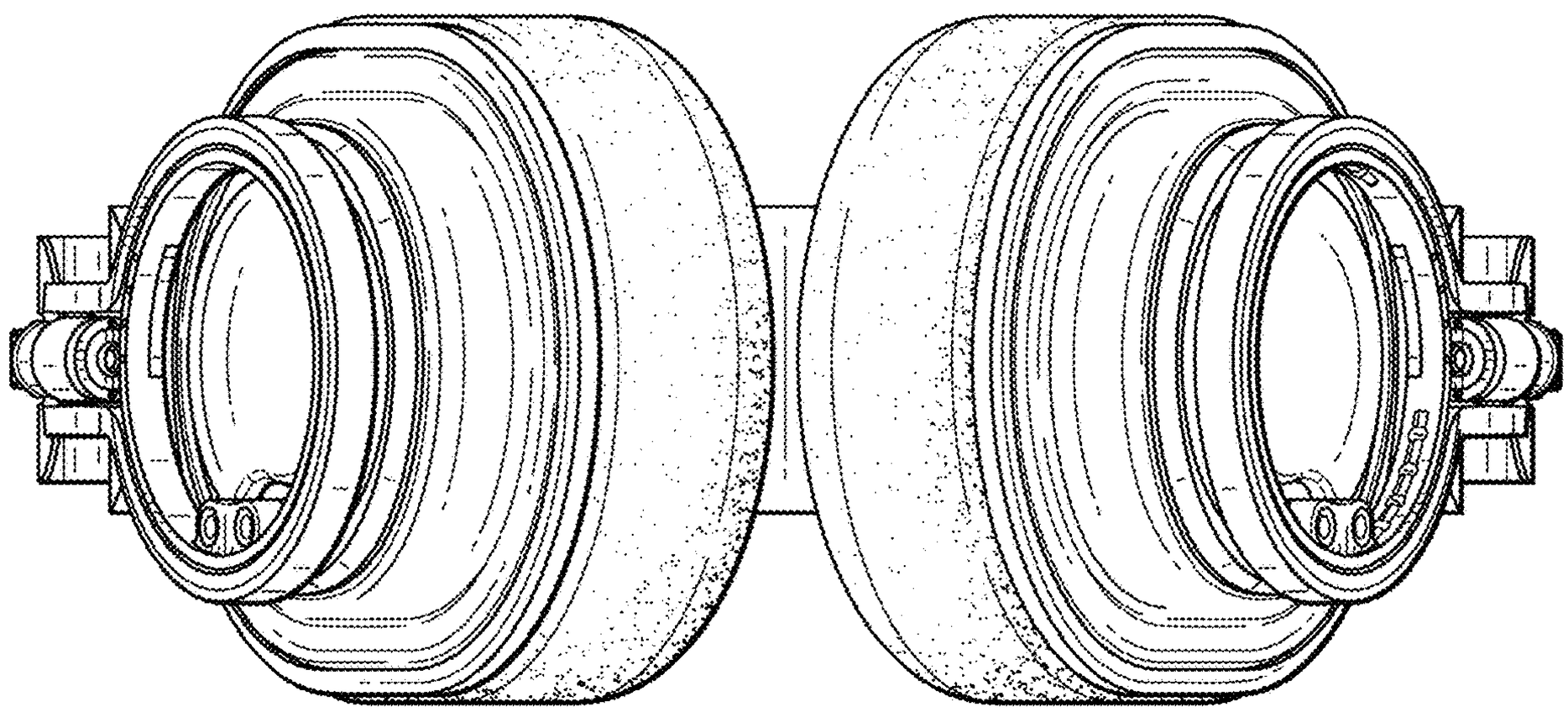
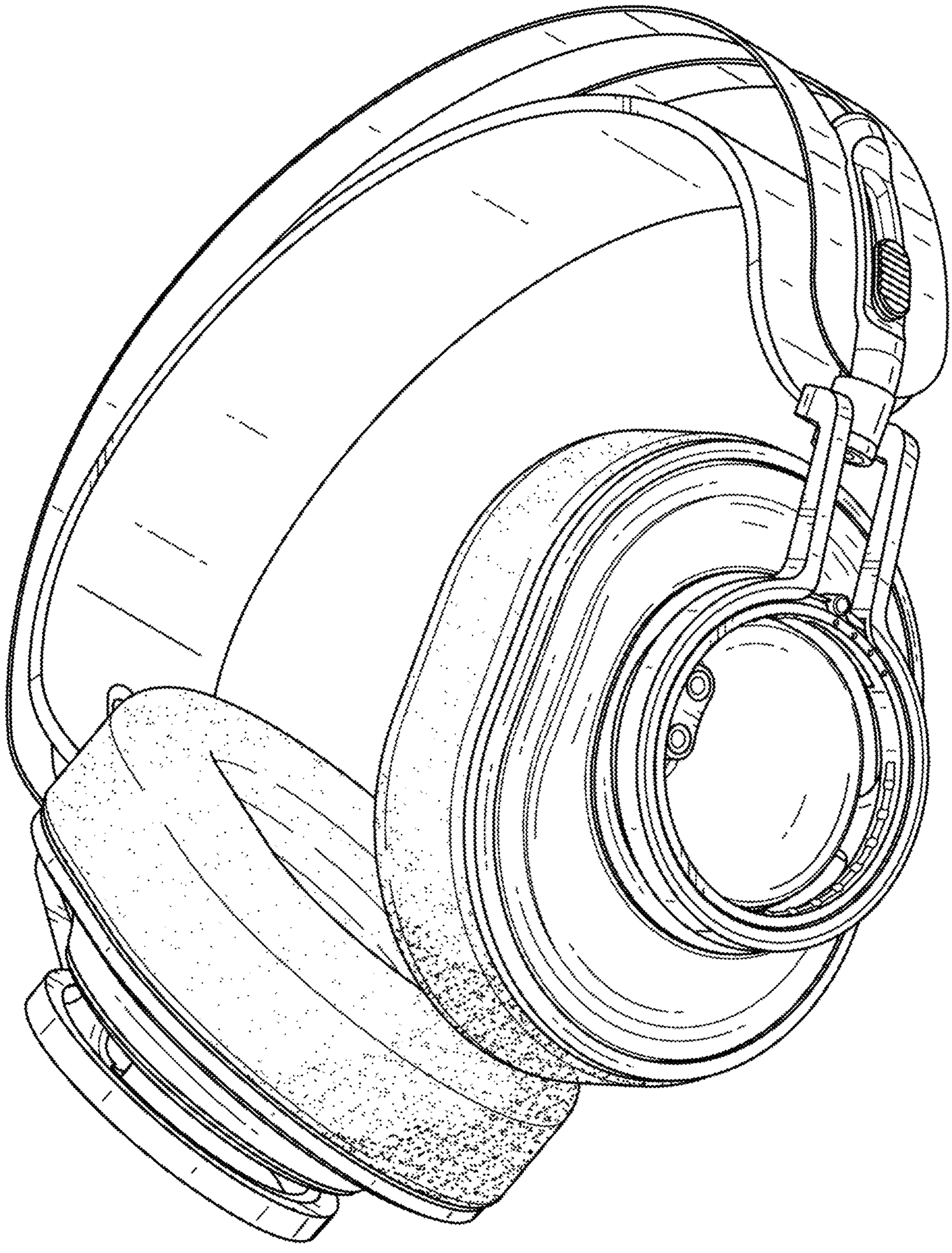
1.8