US0D1008963S

(12) United States Design Patent

Morioka et al.

(10) Patent No.: US D1,008,963 S
(45) Date of Patent: ** Dec. 26, 2023

(54) **PLATE OF BATTERY MODULE**

(71) Applicants: **Yazaki Corporation**, Tokyo (JP); **TOYOTA JIDOSHA KABUSHIKI KAISHA**, Toyota (JP); **KABUSHIKI KAISHA TOYOTA JIDOSHOKKI**, Kariya (JP)

(72) Inventors: **Satoshi Morioka**, Okazaki (JP); **Motoyoshi Okumura**, Nagoya (JP); **Hiromi Ueda**, Kariya (JP); **Naoto Morisaku**, Kariya (JP); **Yutaro Okazaki**, Kakegawa (JP); **Shinichi Yanagihara**, Kakegawa (JP)

(73) Assignees: **YAZAKI CORPORATION**, Tokyo (JP); **TOYOTA JIDOSHA KABUSHIKI KAISHA**, Toyota (JP); **KABUSHIKI KAISHA TOYOTA JIDOSHOKKI**, Kariya (JP)

(**) Term: **15 Years**

(21) Appl. No.: **29/813,598**

(22) Filed: **Oct. 29, 2021**

(30) **Foreign Application Priority Data**

Apr. 30, 2021 (JP) ..... 2021-009369 D

(51) **LOC (14) Cl.** **13-02**

(52) **U.S. Cl.**
USPC **D13/121**

(58) **Field of Classification Search**
USPC D13/103, 107, 108, 110, 112, 118, 119, D13/122, 184, 199, 121
CPC H02J 7/025; H02J 7/005; H02J 7/02; H02J 7/0042; H02J 7/0045; H01R 2201/26; H01M 50/209; H01M 50/536
See application file for complete search history.

(56) **References Cited**

U.S. PATENT DOCUMENTS

D635,506	S	*	4/2011	Morisawa	D13/103
D669,850	S	*	10/2012	Morisawa	D13/103
D670,240	S	*	11/2012	Morisawa	D13/103
D709,441	S	*	7/2014	Kwon	D13/103

(Continued)

FOREIGN PATENT DOCUMENTS

CN	307500159	*	8/2022
CN	307925744	*	3/2023

(Continued)

Primary Examiner — Rosemary K Tarcza
Assistant Examiner — Seth David Kumpf
(74) *Attorney, Agent, or Firm* — Sughrue Mion, PLLC

(57) **CLAIM**

The ornamental design for a plate of battery module, as shown and described.

DESCRIPTION

FIG. **1** is a first perspective view of a plate of battery module showing our new design;
FIG. **2** is a second perspective view thereof;
FIG. **3** is a third perspective view thereof;
FIG. **4** is a fourth perspective view thereof;
FIG. **5** is a front view thereof;
FIG. **6** is a rear view thereof;
FIG. **7** is a left side view thereof;
FIG. **8** is a right side view thereof;
FIG. **9** is a top plan view thereof;
FIG. **10** is a bottom plan view thereof;
FIG. **11** is an enlarged cross-sectional view taken along lines **11-11** shown in FIG. **5**;
FIG. **12** is a first perspective view in a closed state thereof;
FIG. **13** is a second perspective view in a closed state thereof; and,
FIG. **14** is a top plan view in a closed state thereof.

1 Claim, 13 Drawing Sheets

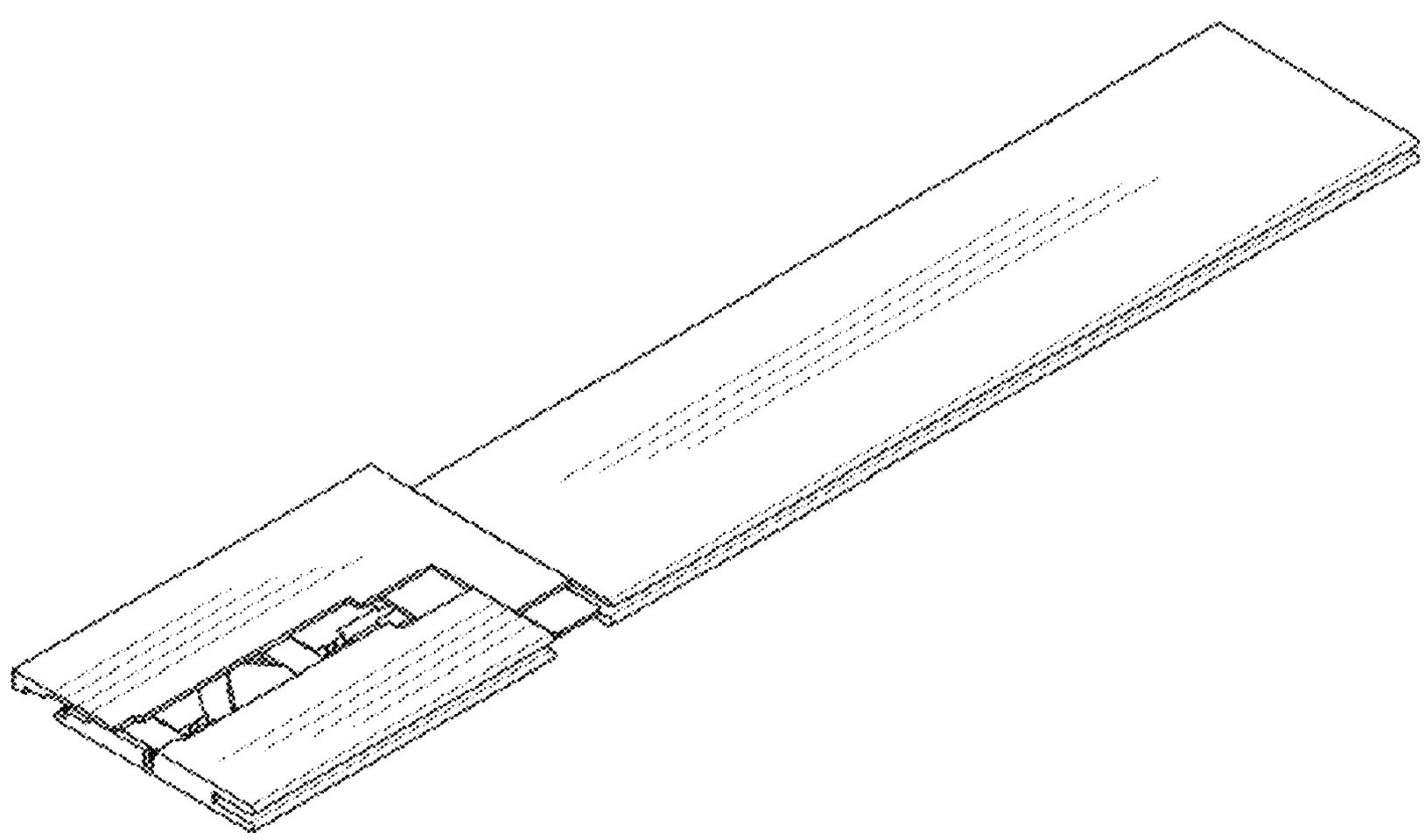

(56) **References Cited**

U.S. PATENT DOCUMENTS

D716,722	S	*	11/2014	Kwon	D13/103
D821,308	S	*	6/2018	Chia	D13/108
D935,389	S	*	11/2021	Park	D13/103
D956,685	S	*	7/2022	Cohen	D13/103
2014/0234691	A1	*	8/2014	Lee	H01M 10/6567 429/120
2016/0126516	A1	*	5/2016	Komiya	H01M 50/227 429/153
2020/0365844	A1	*	11/2020	Jeon	H01M 50/264
2022/0102818	A1	*	3/2022	Rhee	H01M 50/176
2022/0115752	A1	*	4/2022	Wang	H01M 50/211

FOREIGN PATENT DOCUMENTS

JP	D1262677	*	2/2006
JP	D1697202	*	10/2021
JP	D1697203	*	10/2021
JP	D1697204	*	10/2021
JP	D1697238	*	10/2021

* cited by examiner

FIG. 1

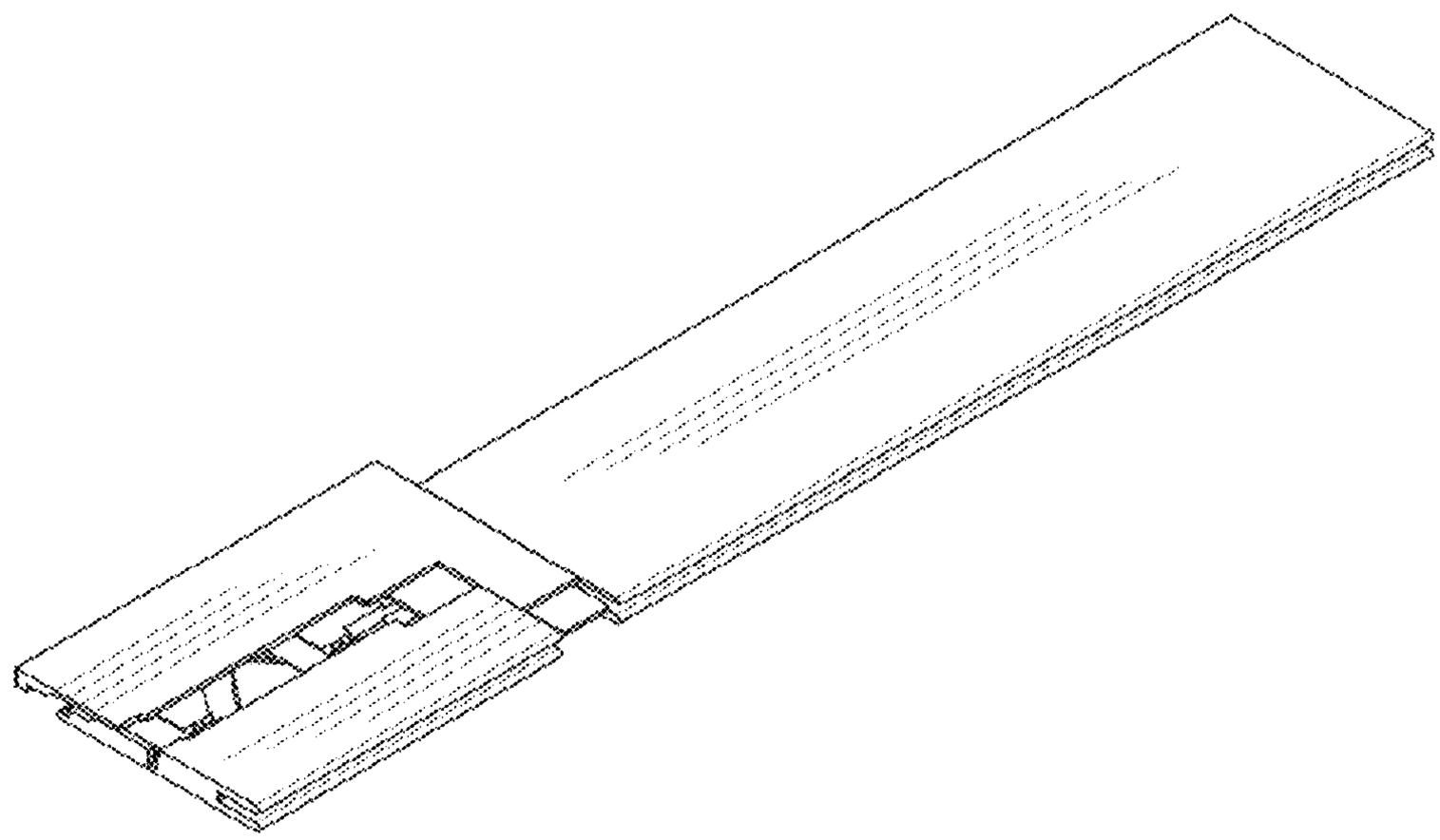

FIG. 2

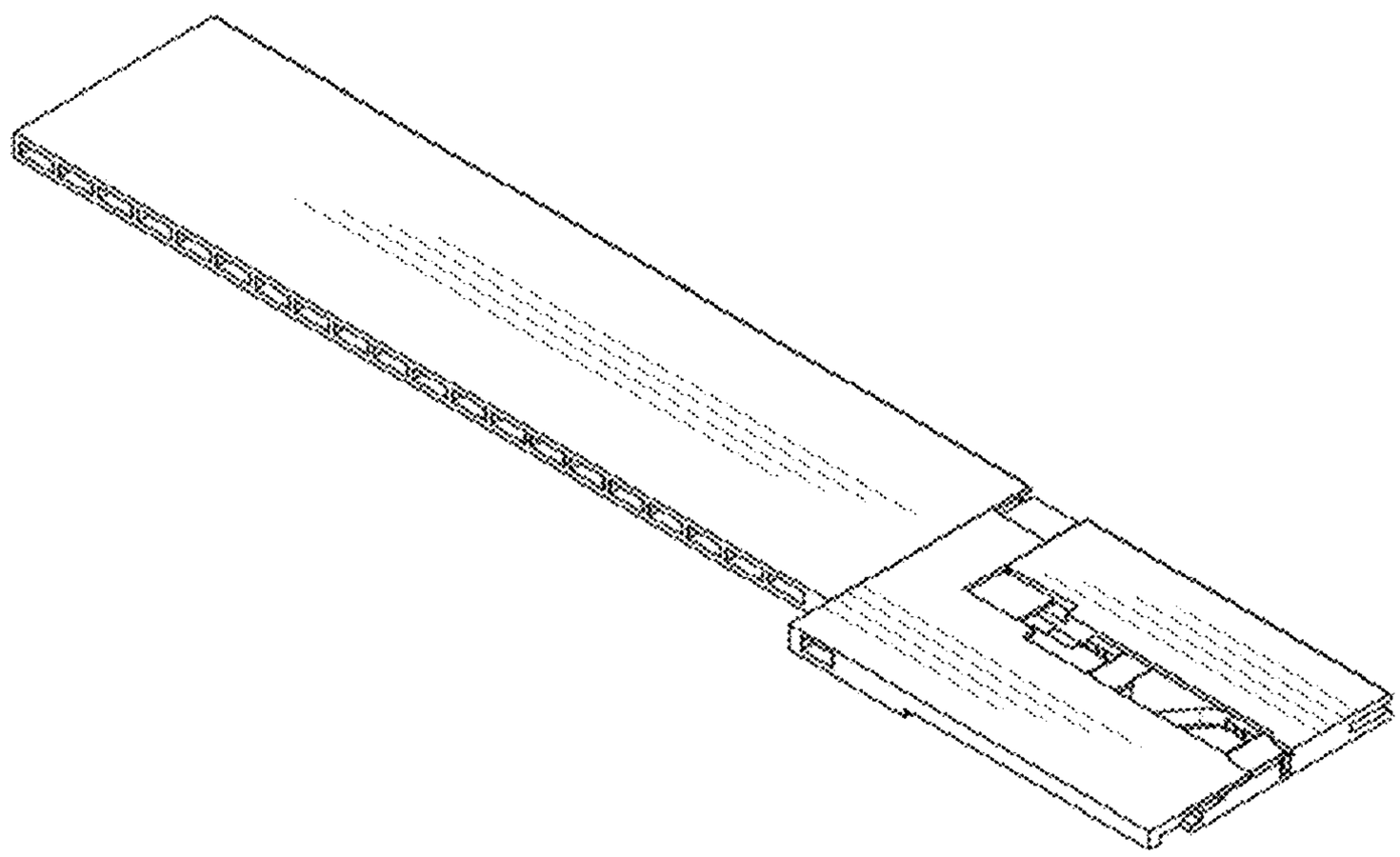

FIG. 3

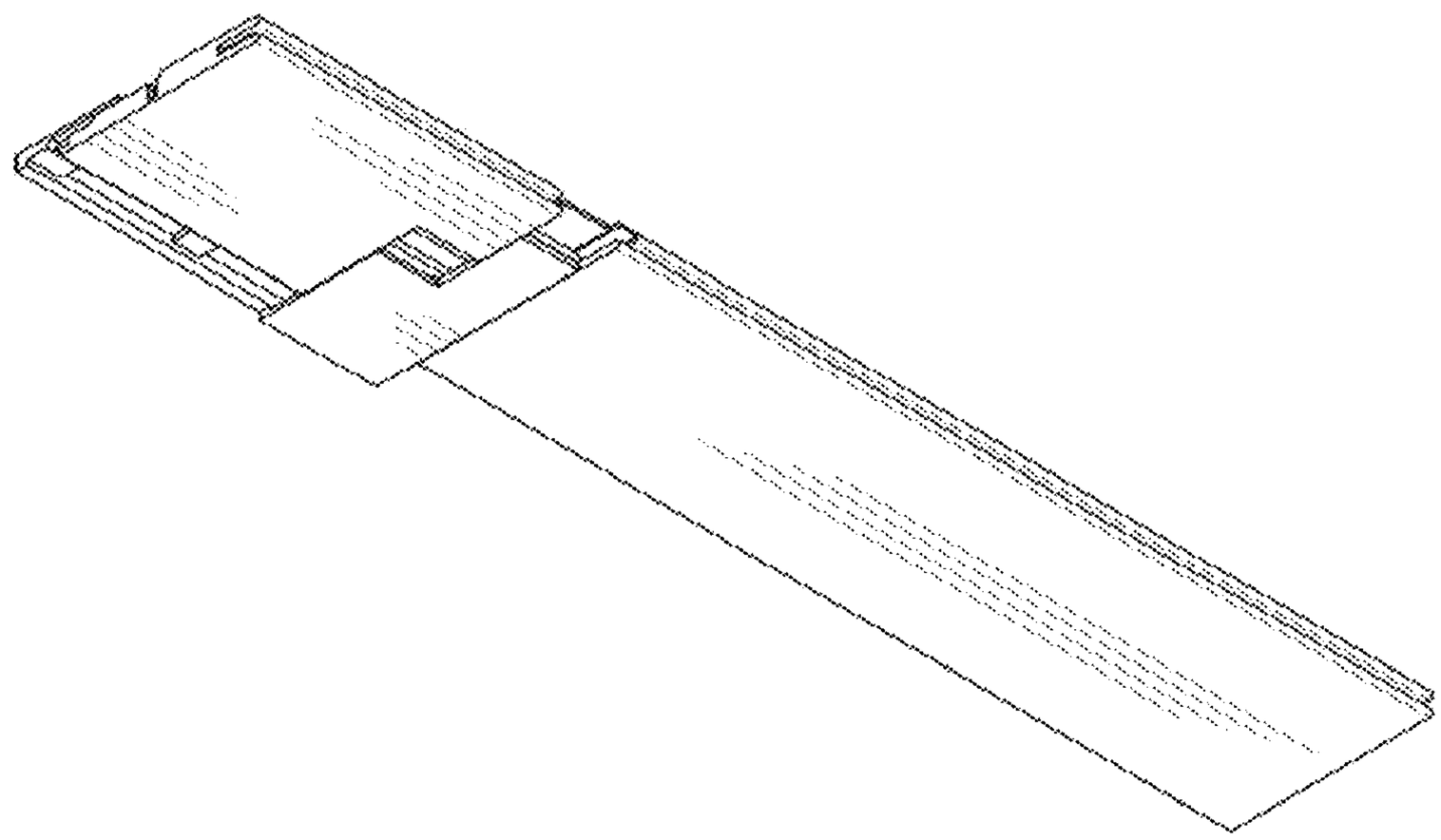

FIG. 4

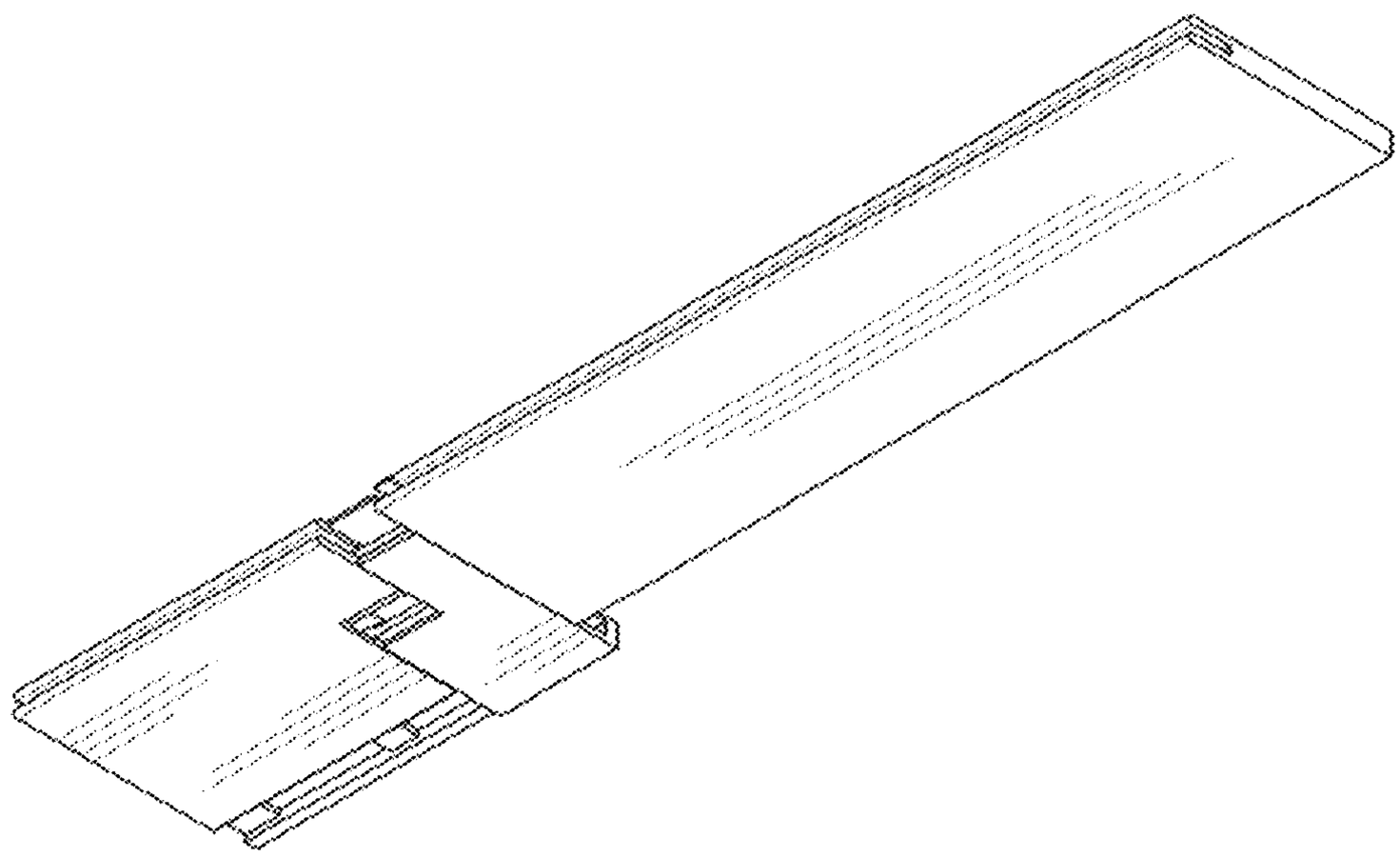

FIG. 5

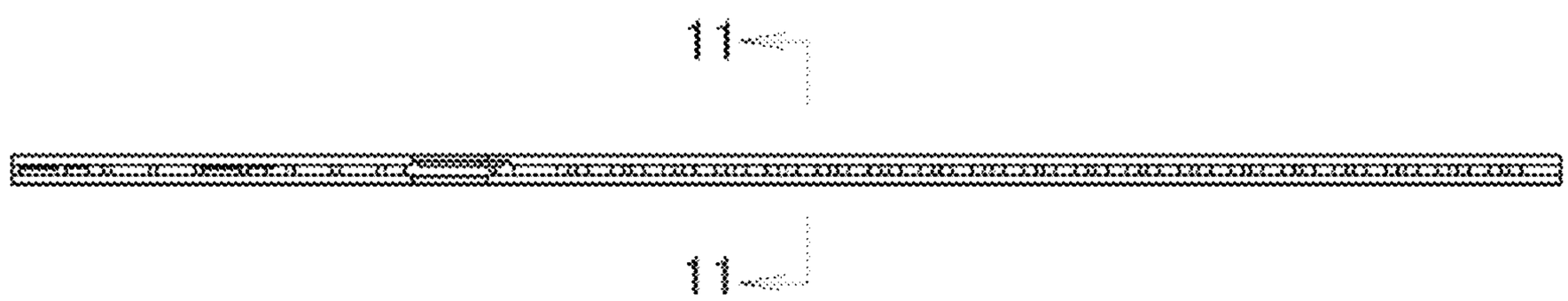

FIG. 6

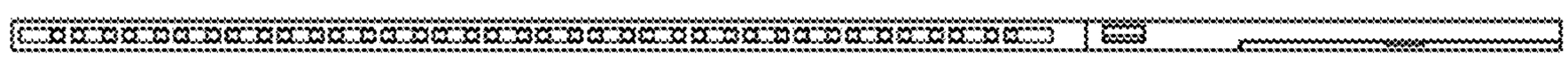

FIG. 7

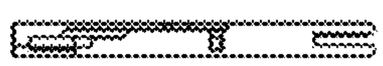

FIG. 8

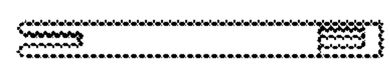

FIG. 9

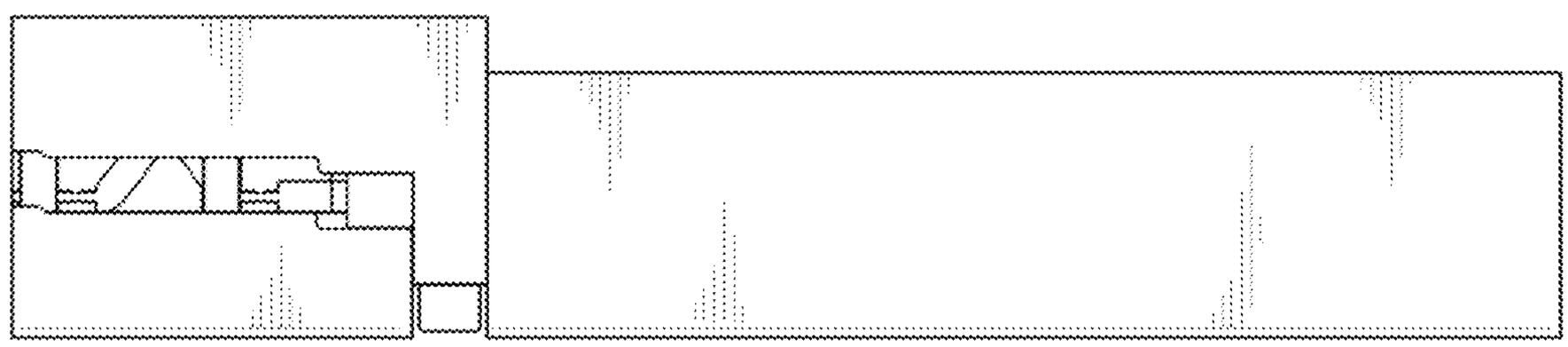

FIG. 10

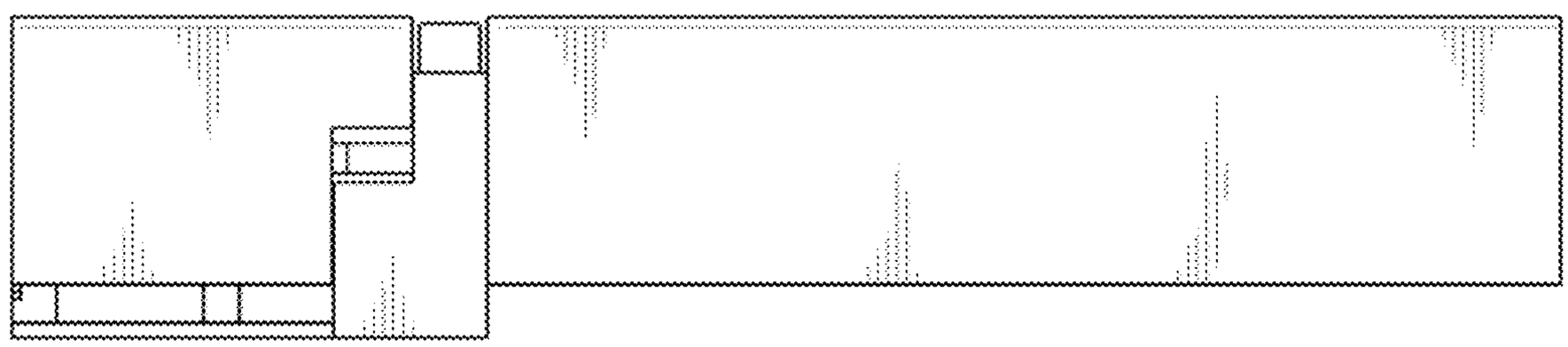

FIG. 11

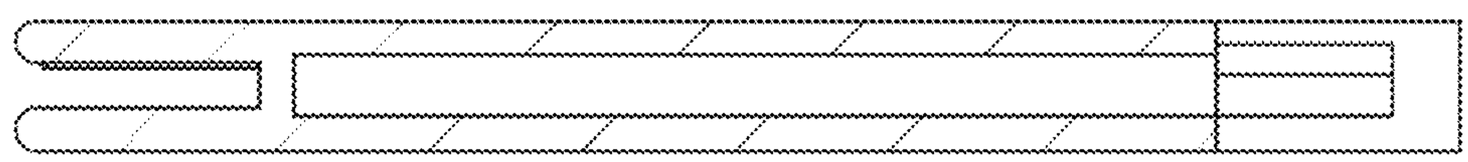

FIG. 12

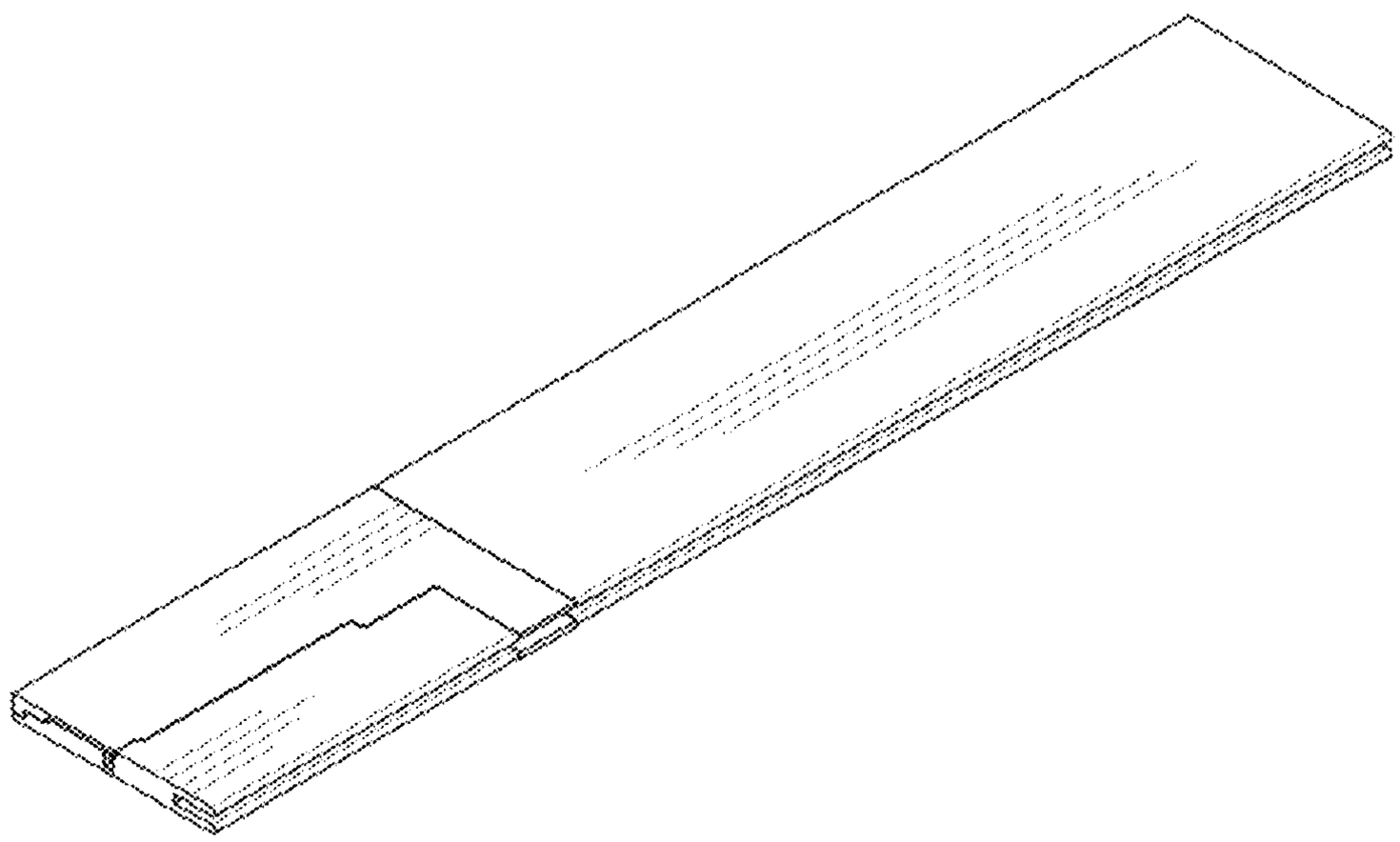

FIG. 13

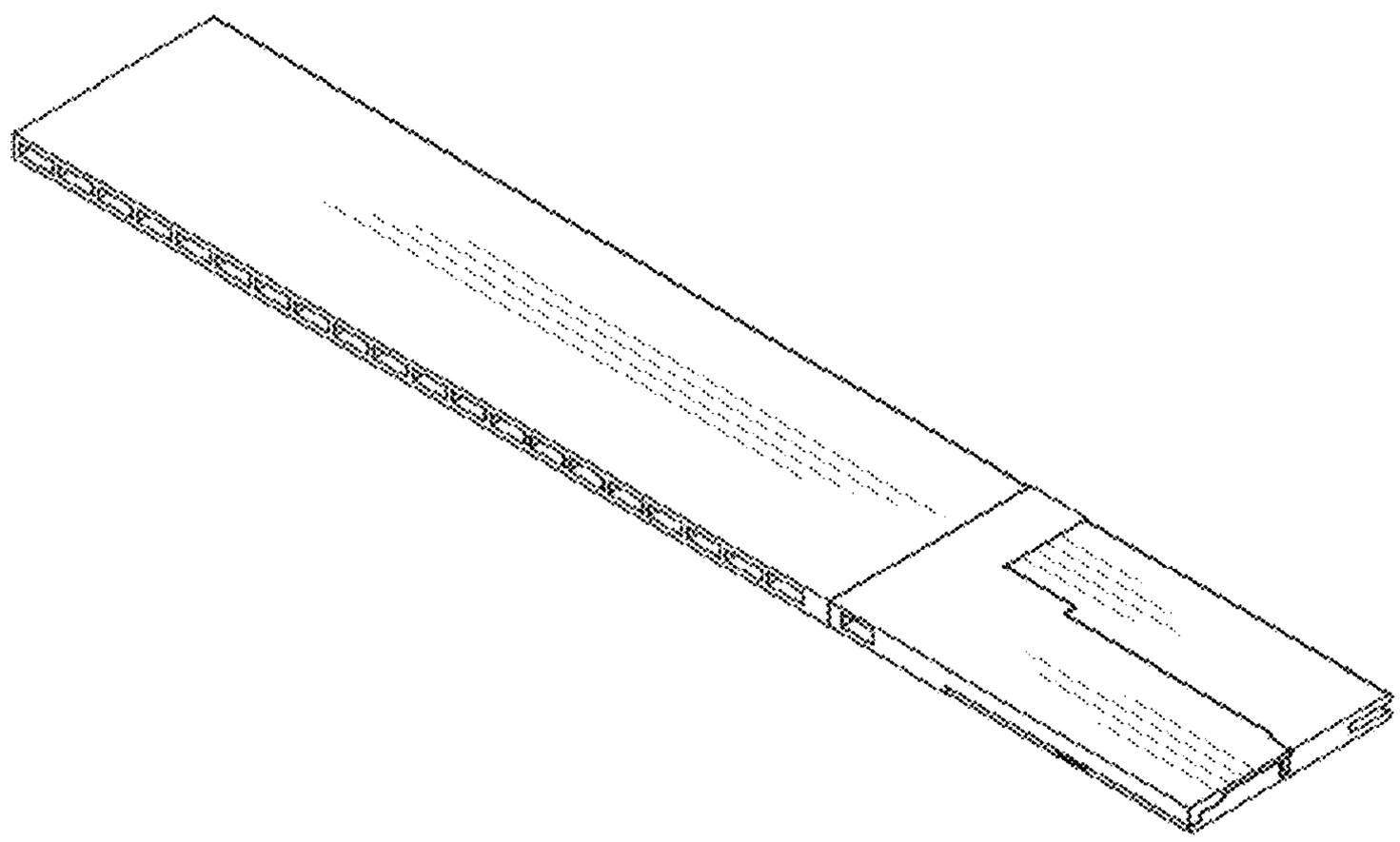
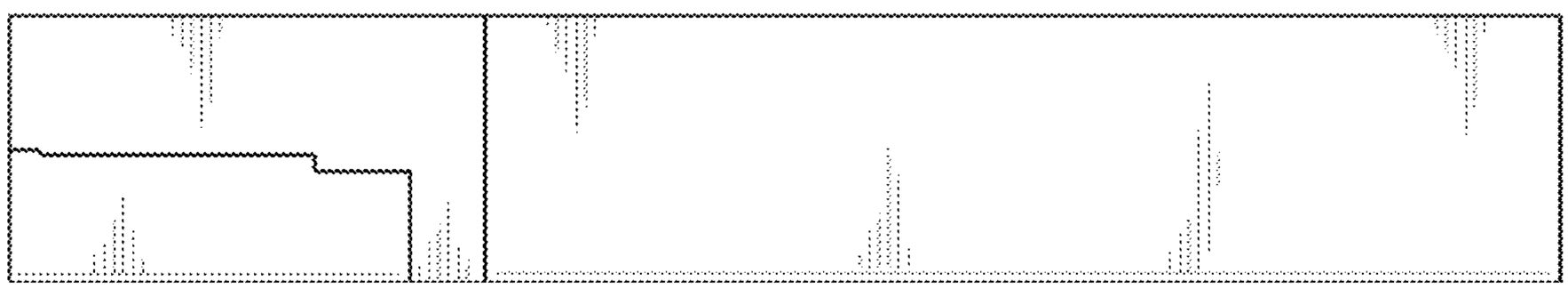
FIG. 14