US0D1003197S

(12) United States Design Patent

Jiang et al.

(10) Patent No.: US D1,003,197 S
(45) Date of Patent: ** Oct. 31, 2023

(54) **CAR**

(71) Applicant: **Foxtron Vehicle Technologies Co., Ltd.**, New Taipei (TW)

(72) Inventors: **Feng-Shuen Jiang**, New Taipei (TW); **Wen-Tai Lin**, New Taipei (TW); **Chia-Yi Cho**, New Taipei (TW)

(73) Assignee: **Foxtron Vehicle Technologies Co., Ltd.**, New Taipei (TW)

(**) Term: **15 Years**

(21) Appl. No.: **29/813,314**

(22) Filed: **Oct. 27, 2021**

(30) **Foreign Application Priority Data**

Sep. 30, 2021 (TW) 110305308

(51) **LOC (14) Cl.** **12-08**

(52) **U.S. Cl.**
USPC **D12/91**

(58) **Field of Classification Search**
USPC D12/86, 90–92, 164; D21/433, 434, 533, D21/535; 296/181.1–181.5, 183.1
CPC B62D 25/00; B62D 25/06; B62D 33/00; B62D 35/00
See application file for complete search history.

(56) **References Cited**

U.S. PATENT DOCUMENTS

D727,209 S * 4/2015 Kawasaki D12/91
D832,742 S * 11/2018 Fisker D12/84
D864,025 S * 10/2019 Tomasson D12/91
D872,650 S * 1/2020 Tomasson D12/91
D881,755 S * 4/2020 Tomasson D12/91
D885,981 S * 6/2020 Lian D12/91
D894,047 S * 8/2020 Tomasson D12/91
D912,577 S * 3/2021 Fontaeus D12/91
D914,544 S * 3/2021 Sheffield D12/91
D920,842 S * 6/2021 Yao D12/91
D940,589 S * 1/2022 Nakamura D12/86
D956,626 S * 7/2022 Fang D12/91
D974,962 S * 1/2023 Tovey D12/91
D976,755 S * 1/2023 Koide D12/91
D983,090 S * 4/2023 Jung D12/91

* cited by examiner

Primary Examiner — Melody N Brown
(74) *Attorney, Agent, or Firm* — ScienBiziP, P.C.

(57) **CLAIM**

The ornamental design for a car, as shown and described.

DESCRIPTION

FIG. **1** is a top, front and left side perspective view of a car showing our new design;
FIG. **2** is a top, rear and left side perspective view thereof;
FIG. **3** is a top, front and right side perspective view thereof;
FIG. **4** is a top, rear and right side perspective view thereof;
FIG. **5** is a left side elevation view thereof;
FIG. **6** is a right side elevation view thereof;
FIG. **7** is a front elevation view thereof;
FIG. **8** is a rear elevation view thereof; and,
FIG. **9** is a top plan view thereof.

1 Claim, 9 Drawing Sheets

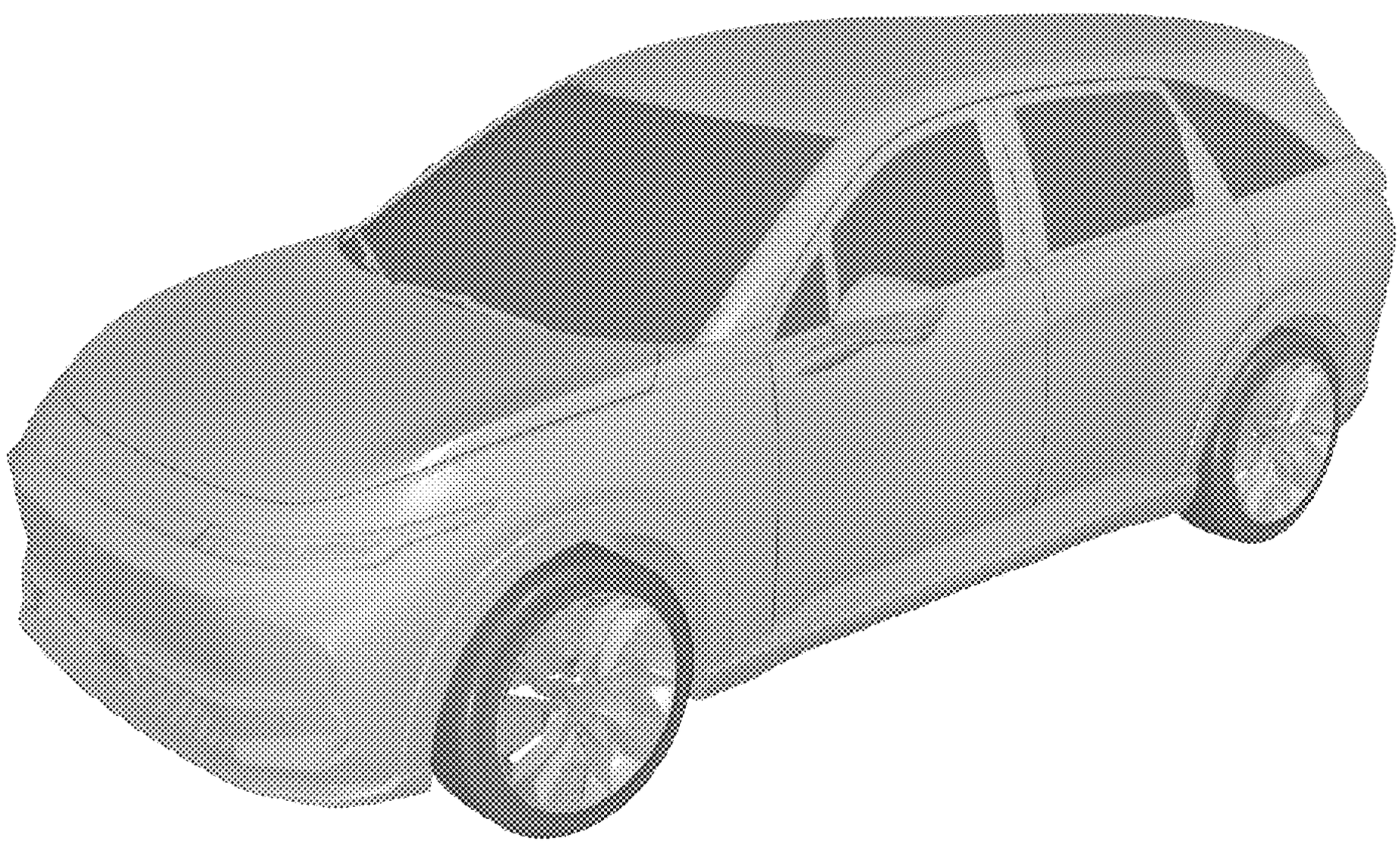

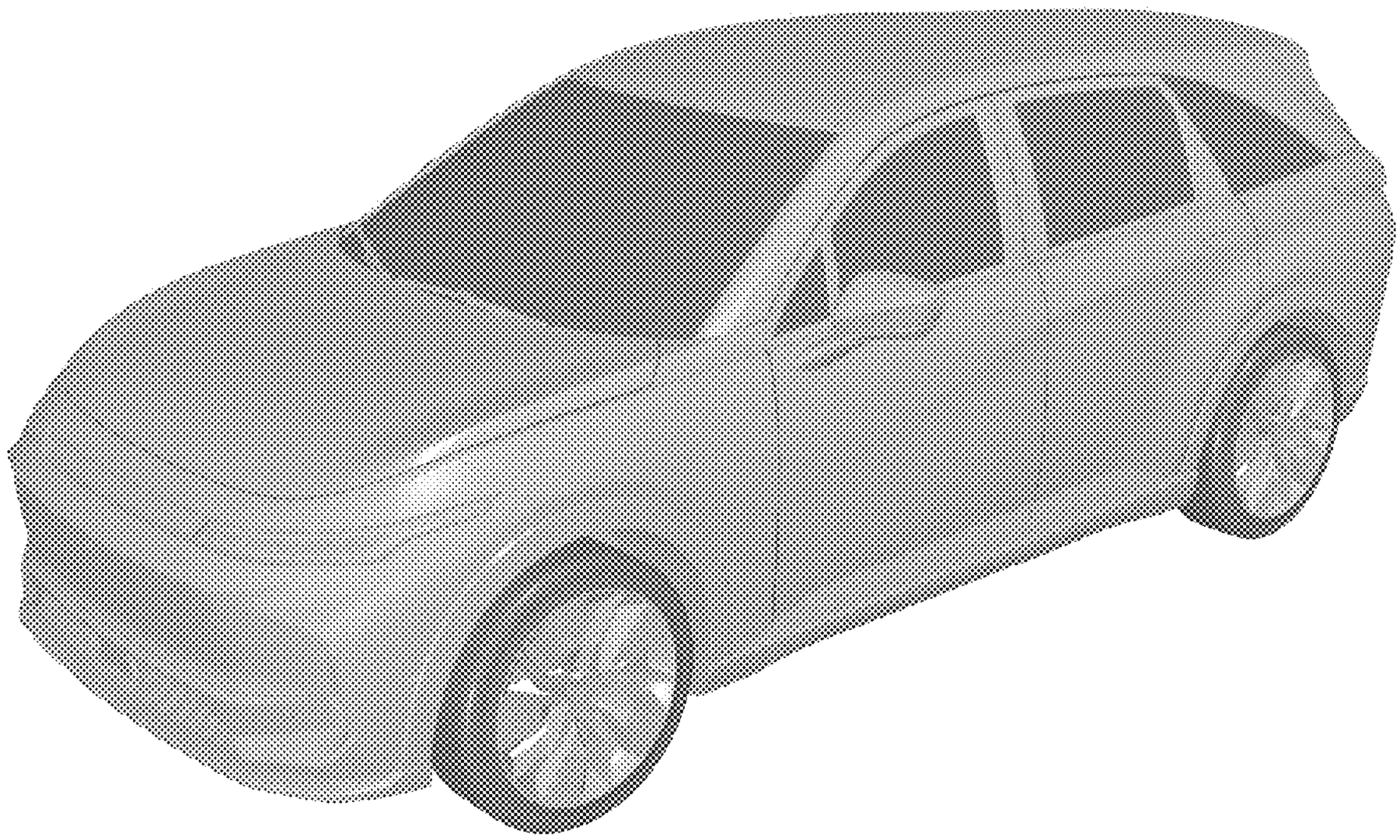

FIG. 1

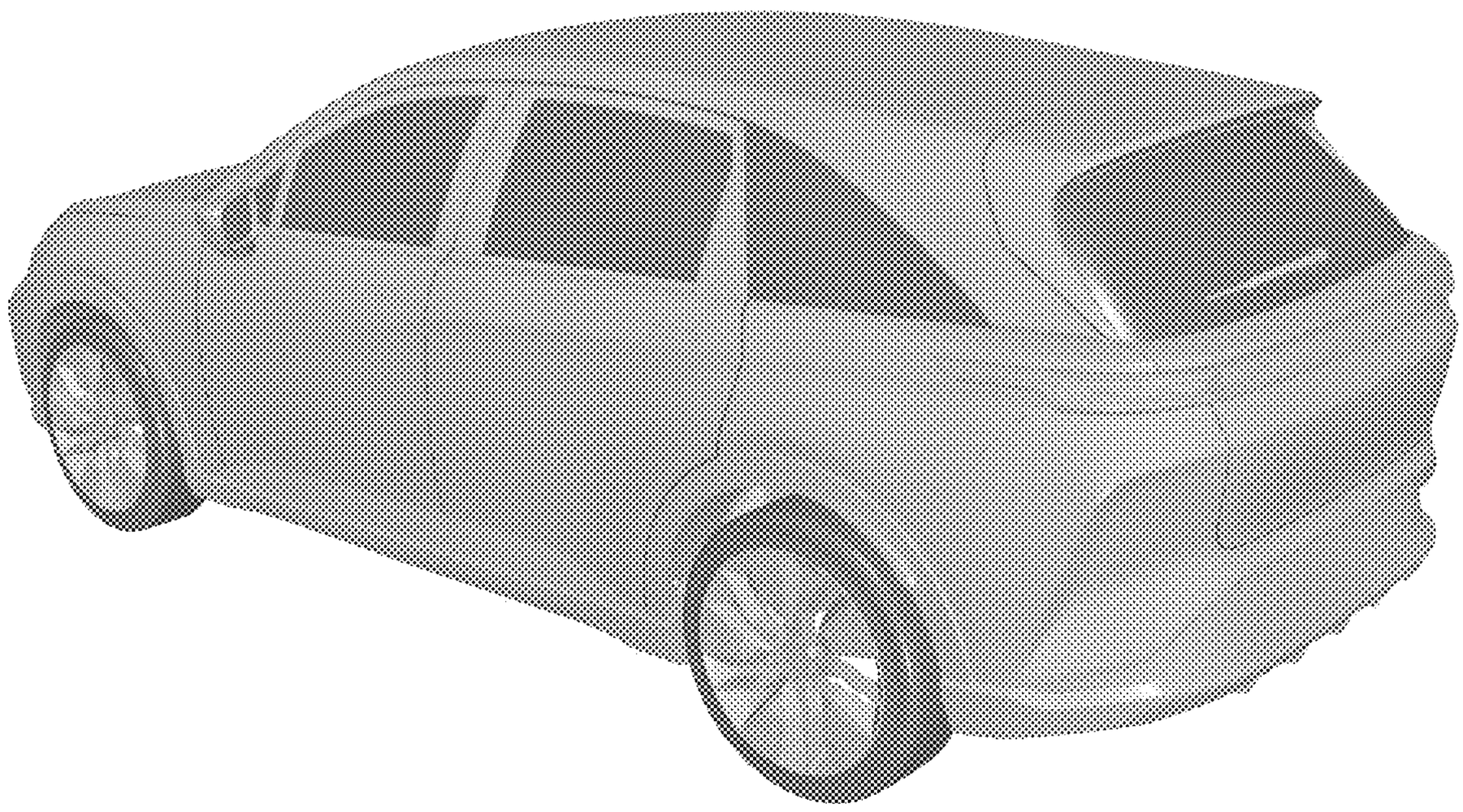

FIG. 2

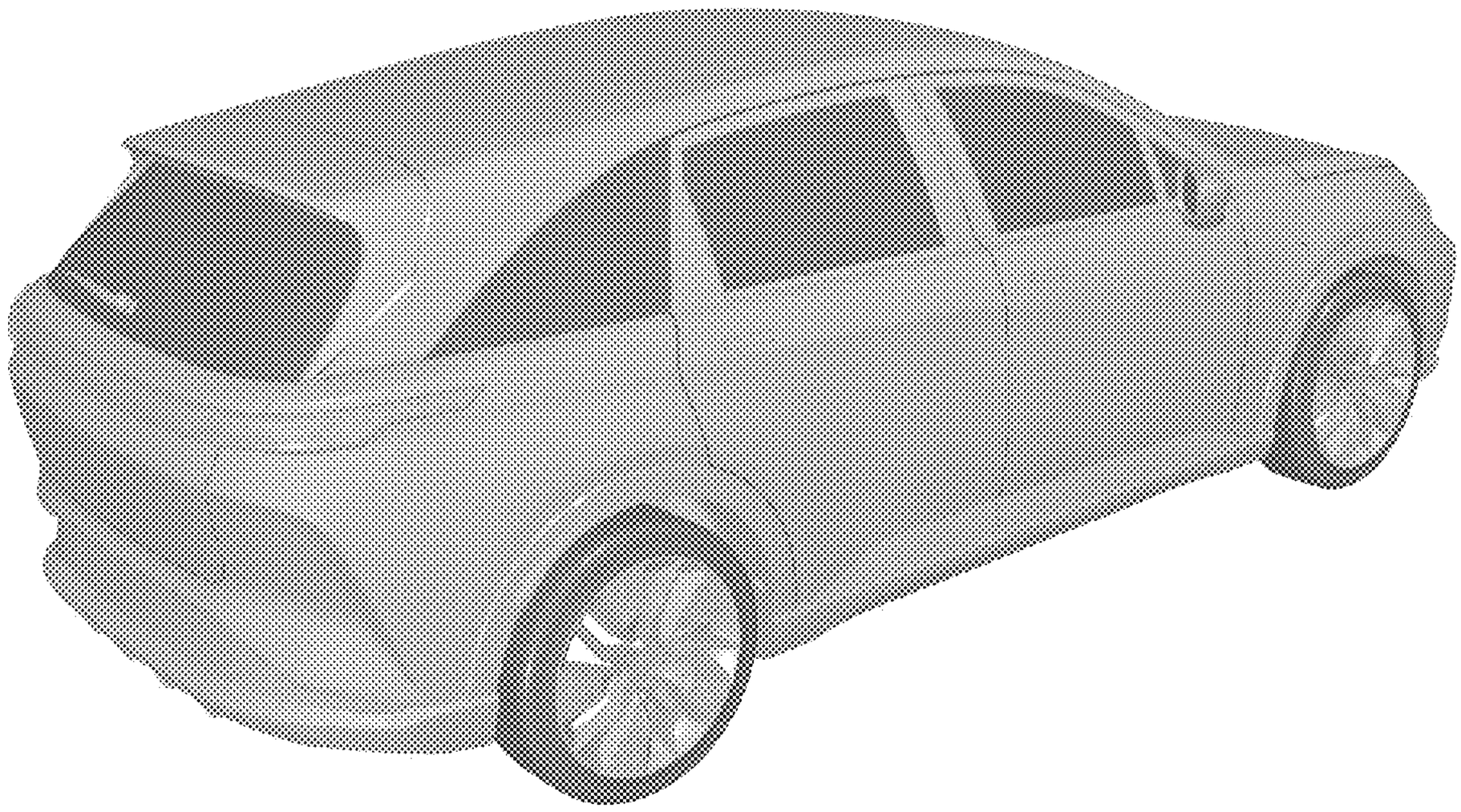

FIG. 3

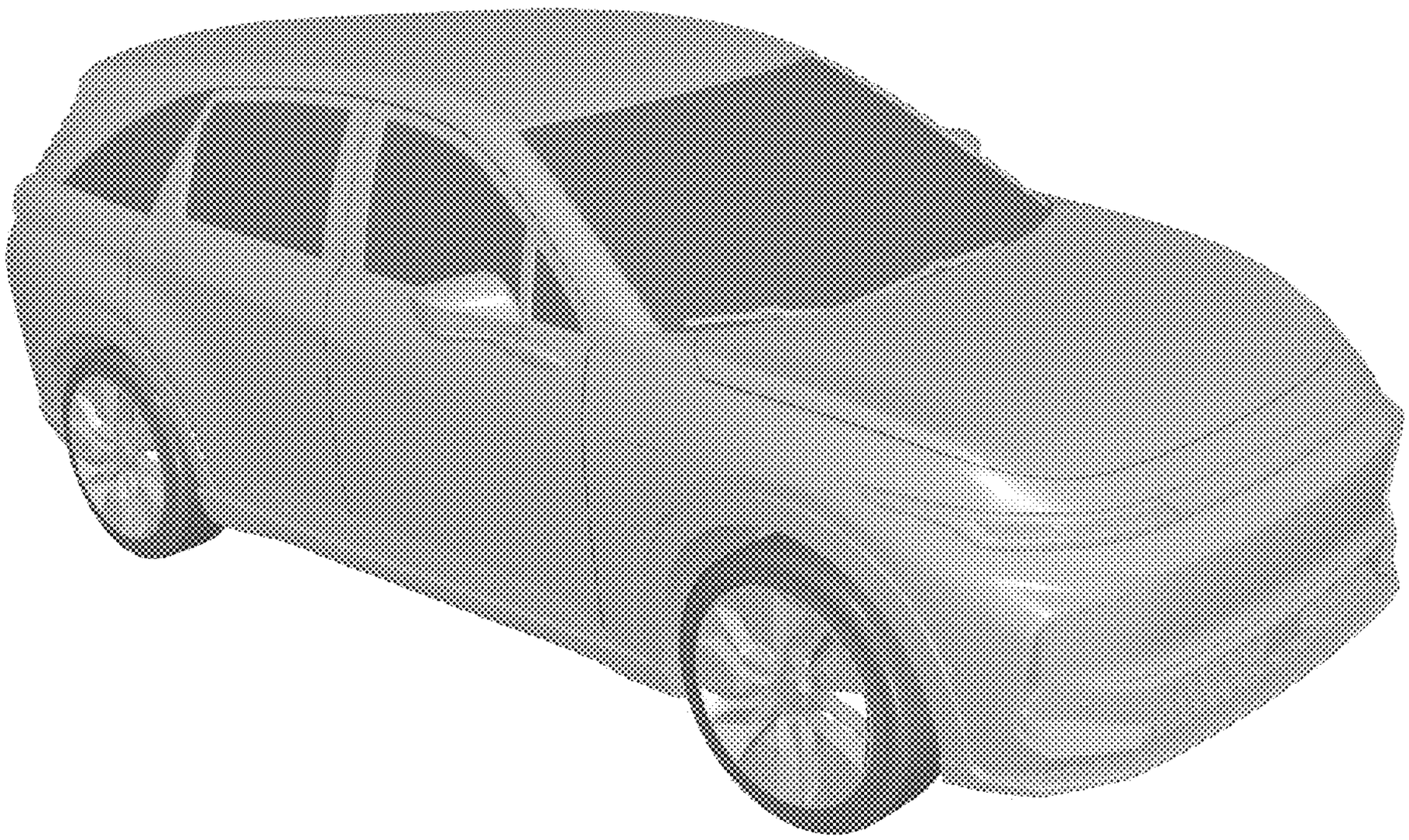

FIG. 4

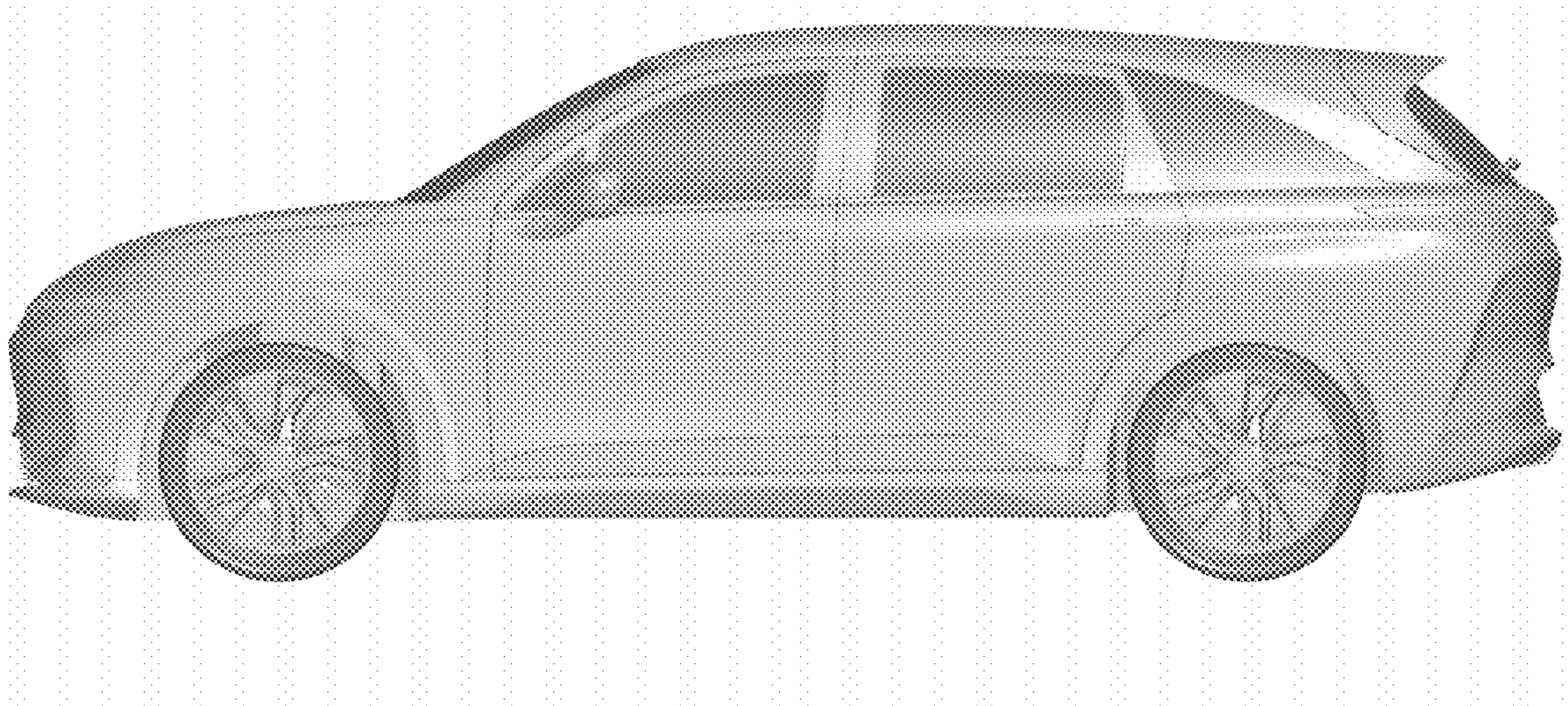

FIG. 5

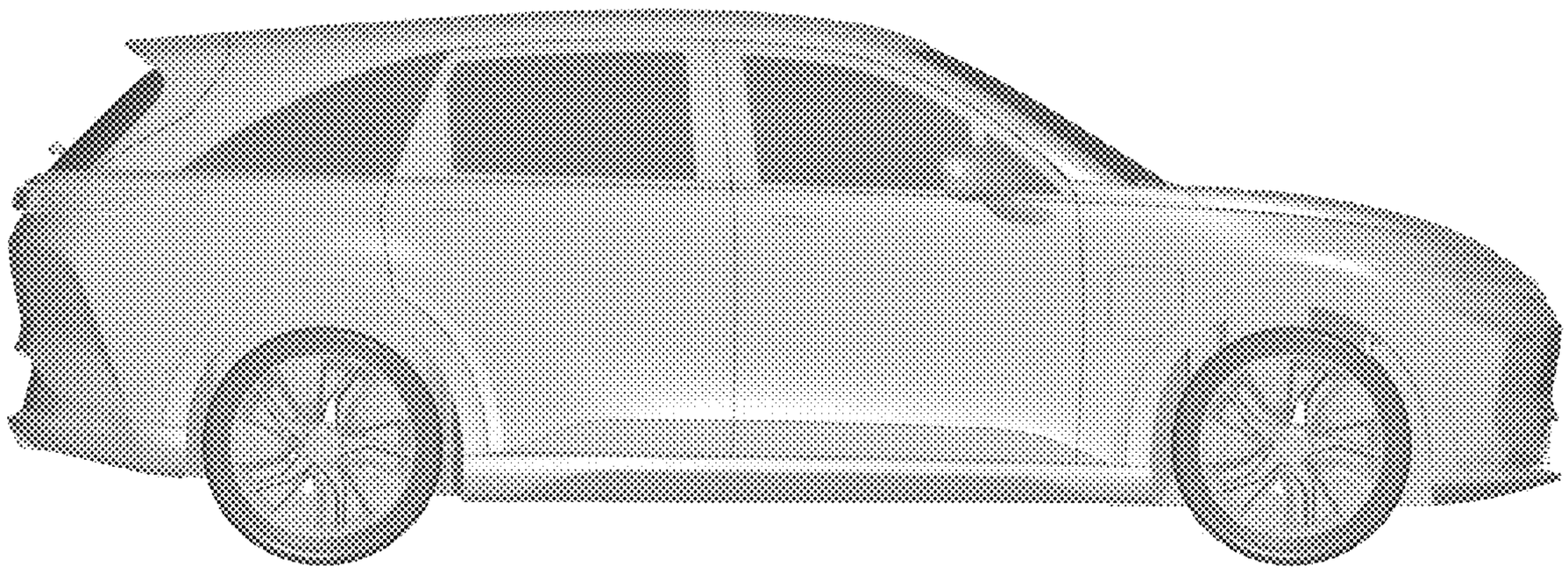

FIG. 6

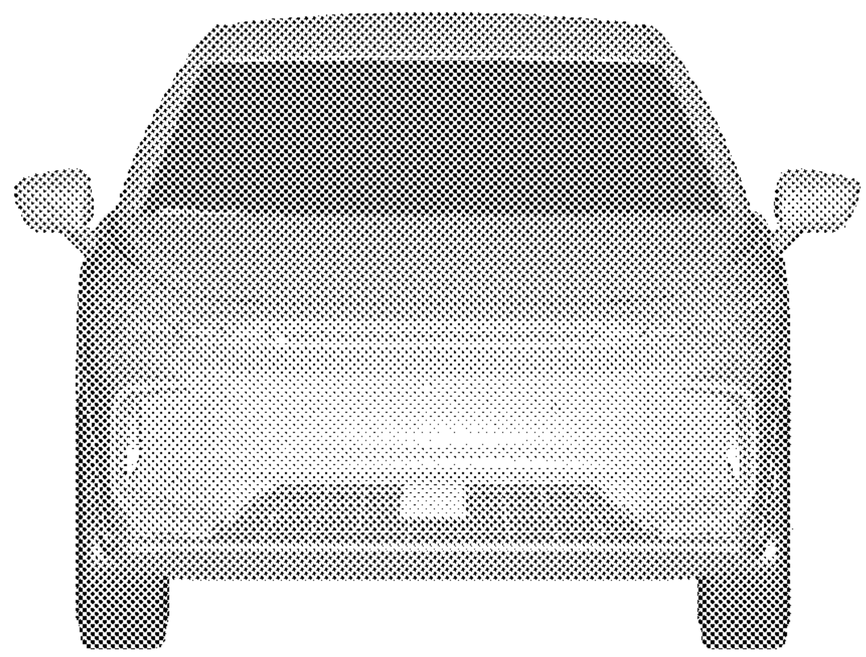

FIG. 7

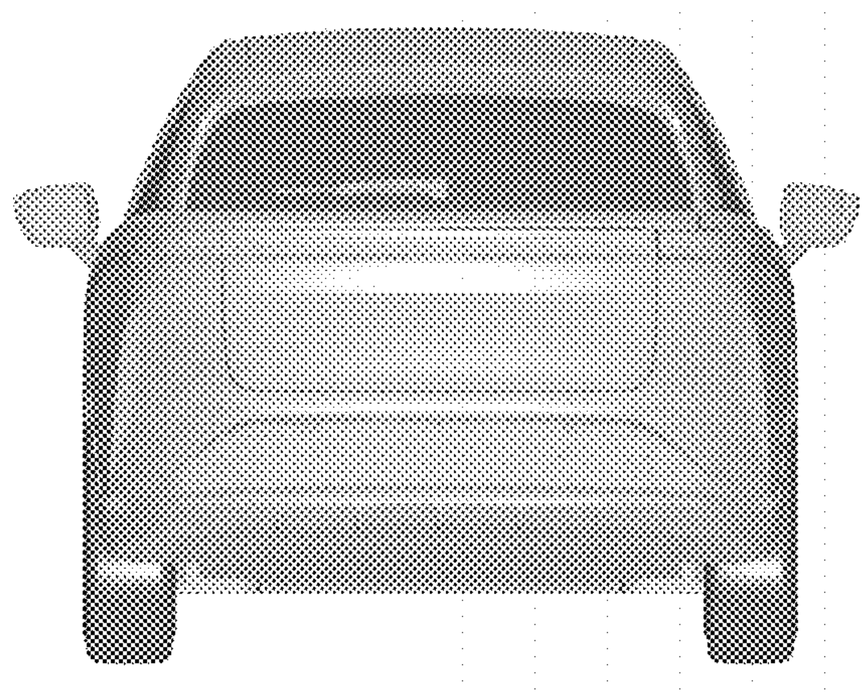

FIG. 8

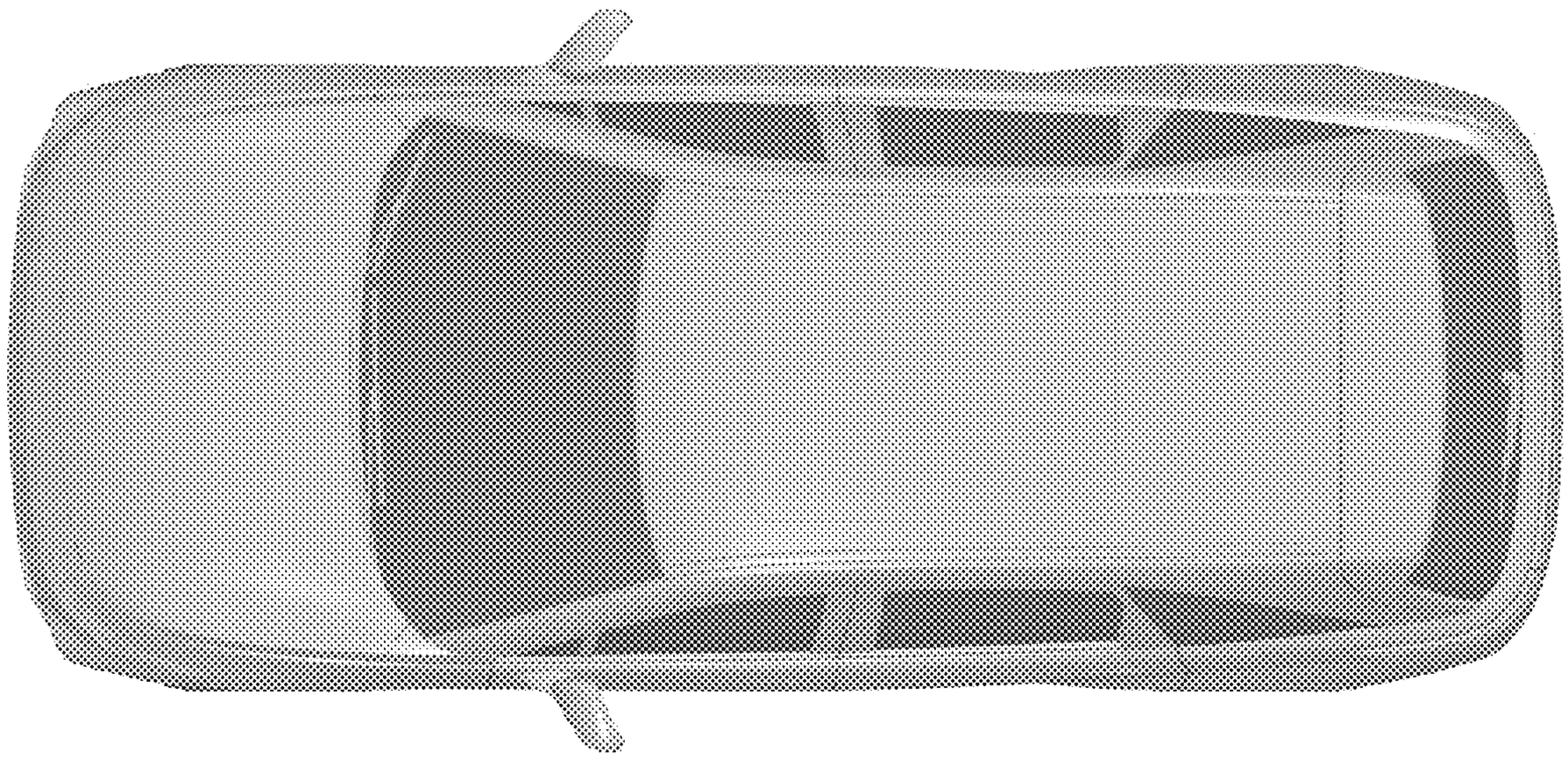

FIG. 9