US009565395B1

(12) United States Patent
Kuwata et al.

(10) Patent No.: US 9,565,395 B1
(45) Date of Patent: Feb. 7, 2017

(54) **VIDEO IMAGE PROCESSING APPARATUS AND RECORDING MEDIUM**

(71) Applicants: **Koji Kuwata**, Kanagawa (JP); **Tomoyuki Goto**, Kanagawa (JP); **Hiroaki Uchiyama**, Kanagawa (JP); **Kiyoto Igarashi**, Kanagawa (JP); **Kazuki Kitazawa**, Kanagawa (JP); **Masato Takahashi**, Tokyo (JP); **Nobumasa Gingawa**, Kanagawa (JP)

(72) Inventors: **Koji Kuwata**, Kanagawa (JP); **Tomoyuki Goto**, Kanagawa (JP); **Hiroaki Uchiyama**, Kanagawa (JP); **Kiyoto Igarashi**, Kanagawa (JP); **Kazuki Kitazawa**, Kanagawa (JP); **Masato Takahashi**, Tokyo (JP); **Nobumasa Gingawa**, Kanagawa (JP)

(73) Assignee: **Ricoh Company, Ltd.**, Tokyo (JP)

(*) Notice: Subject to any disclaimer, the term of this patent is extended or adjusted under 35 U.S.C. 154(b) by 0 days.

(21) Appl. No.: **15/196,221**

(22) Filed: **Jun. 29, 2016**

(30) **Foreign Application Priority Data**

Jul. 16, 2015 (JP) 2015-142504

(51) **Int. Cl.**

H04N 7/14	(2006.01)
H04N 7/15	(2006.01)
H04N 19/107	(2014.01)
H04N 19/17	(2014.01)
H04N 19/85	(2014.01)
H04N 21/233	(2011.01)
H04N 21/2383	(2011.01)

(52) **U.S. Cl.**
CPC ***H04N 7/15*** (2013.01); ***H04N 19/107*** (2014.11); ***H04N 19/17*** (2014.11); ***H04N 19/85*** (2014.11); ***H04N 21/233*** (2013.01); ***H04N 21/2383*** (2013.01)

(58) **Field of Classification Search**
CPC H04N 7/14
USPC 348/14.01, 14.12, 14.13, 14.16
See application file for complete search history.

(56) **References Cited**

U.S. PATENT DOCUMENTS

5,959,667	A	9/1999	Maeng
6,618,073	B1	9/2003	Lambert et al.

(Continued)

FOREIGN PATENT DOCUMENTS

JP	3173257	6/2001
JP	2002-305733	10/2002
JP	2014-200076	10/2014

Primary Examiner — Olisa Anwah
(74) *Attorney, Agent, or Firm* — IPUSA, PLLC

(57) **ABSTRACT**

A video image processing apparatus including, a generation unit configured to generate a video image frame from an image area to be used included in a video image captured by a camera, a spatial area in the video image being defined by the image area to be used, an encoding unit configured to encode the video image frame into any one of a first video image frame and a second video image frame, and a detection unit configured to detect a trigger for changing the image area to be used to report the detection of the trigger to the generation unit, wherein the encoding unit reports a encoded video image frame type to the generation unit in advance, and in response to receiving the detection of the trigger, the generation unit changes the image area to be used in a video image frame based on the reported type.

7 Claims, 7 Drawing Sheets

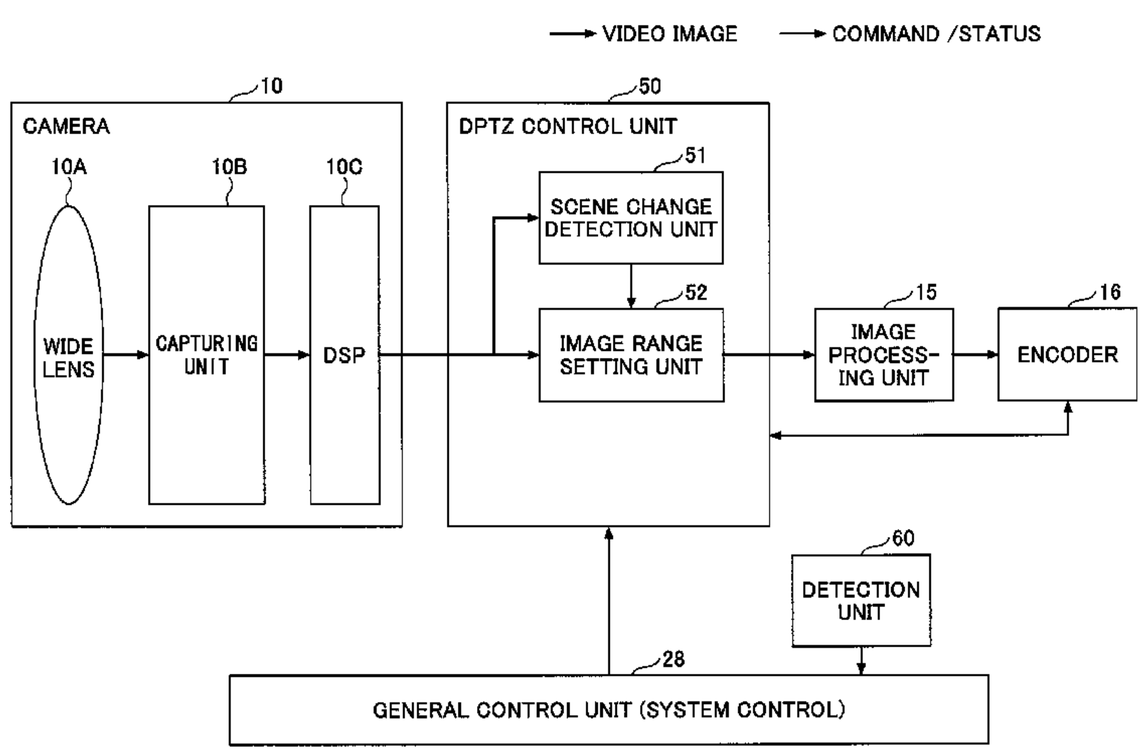

(56) **References Cited**

U.S. PATENT DOCUMENTS

6,943,819	B2	9/2005	Takaki et al.
7,113,201	B1	9/2006	Taylor et al.
7,117,157	B1	10/2006	Taylor et al.
7,675,539	B2	3/2010	Matsui
8,044,990	B2	10/2011	Kawaguchi
8,111,282	B2	2/2012	Cutler et al.
8,234,113	B2	7/2012	Zhang et al.
8,248,448	B2	8/2012	Feng et al.
8,314,829	B2	11/2012	Cutler
8,330,787	B2	12/2012	Cutler
8,358,328	B2	1/2013	Friel et al.
8,395,653	B2	3/2013	Feng et al.
8,433,061	B2	4/2013	Cutler
8,510,110	B2	8/2013	Zhang et al.
9,030,520	B2	5/2015	Chu et al.
9,084,068	B2	7/2015	Abrahamsson et al.
9,363,623	B2	6/2016	Nakamura
2008/0246833	A1	10/2008	Yasui et al.
2011/0285807	A1	11/2011	Feng
2013/0271559	A1	10/2013	Feng et al.
2014/0049595	A1*	2/2014	Feng H04N 7/15 348/14.08
2014/0376740	A1	12/2014	Shigenaga et al.
2015/0023524	A1	1/2015	Shigenaga et al.
2015/0046581	A1	2/2015	Inoue
2015/0047002	A1	2/2015	Tamura
2015/0071130	A1	3/2015	Okuyama
2015/0133106	A1	5/2015	Nakamura
2015/0146078	A1	5/2015	Aarrestad et al.
2015/0149909	A1	5/2015	Nakamura et al.
2015/0149990	A1	5/2015	Nakamura
2016/0021405	A1	1/2016	Kasatani

* cited by examiner

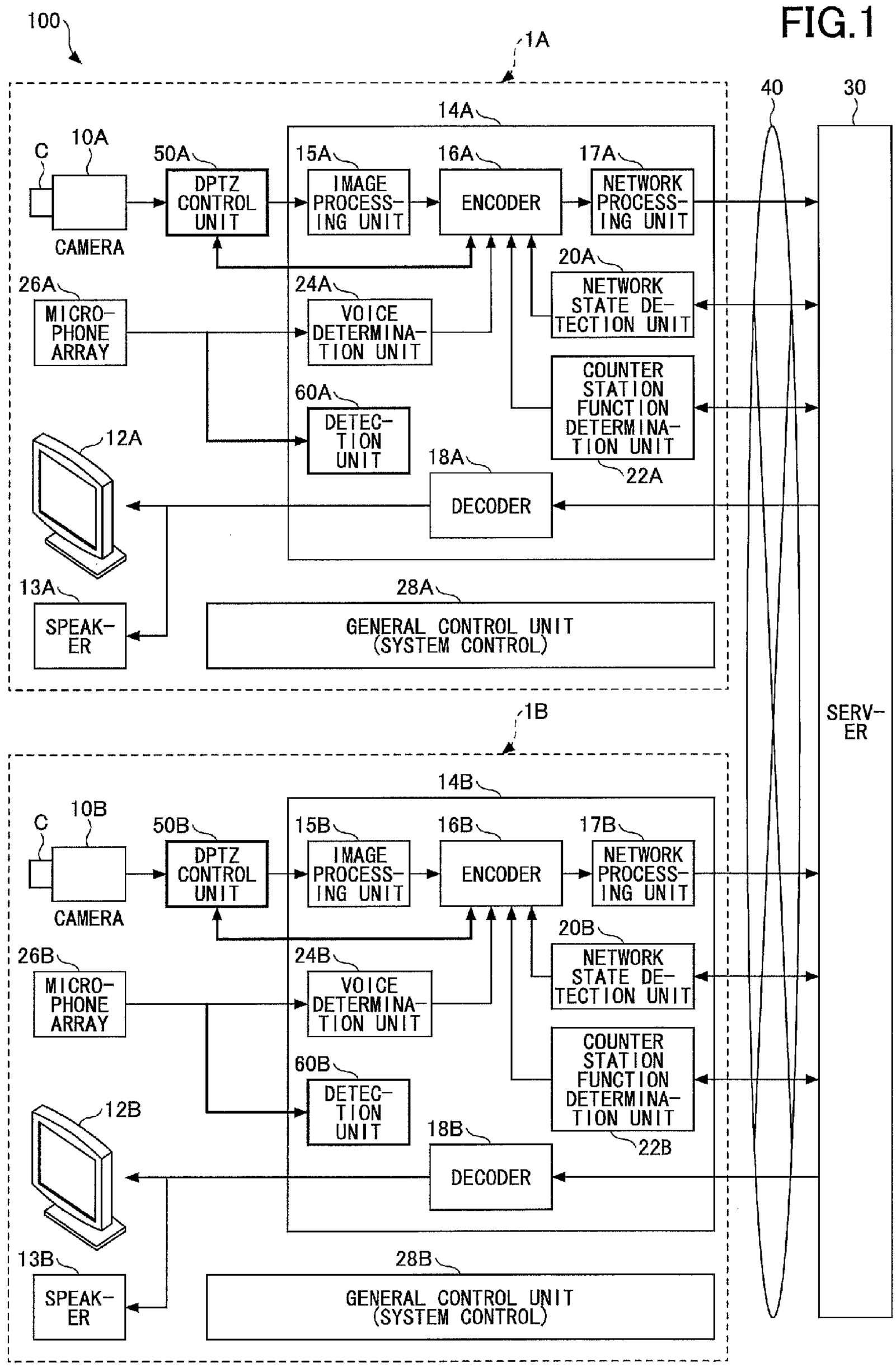
FIG.1
100
1A
14A
C
10A
CAMERA
50A
DPTZ CONTROL UNIT
15A
IMAGE PROCESS-ING UNIT
16A
ENCODER
17A
NETWORK PROCESS-ING UNIT
40
30
20A
NETWORK STATE DE-TECTION UNIT
26A
MICRO-PHONE ARRAY
24A
VOICE DETERMINA-TION UNIT
COUNTER STATION FUNCTION DETERMINA-TION UNIT
22A
60A
DETEC-TION UNIT
12A
18A
DECODER
13A
SPEAK-ER
28A
GENERAL CONTROL UNIT (SYSTEM CONTROL)
SERV-ER
1B
14B
C
10B
CAMERA
50B
DPTZ CONTROL UNIT
15B
IMAGE PROCESS-ING UNIT
16B
ENCODER
17B
NETWORK PROCESS-ING UNIT
20B
NETWORK STATE DE-TECTION UNIT
26B
MICRO-PHONE ARRAY
24B
VOICE DETERMINA-TION UNIT
COUNTER STATION FUNCTION DETERMINA-TION UNIT
22B
60B
DETEC-TION UNIT
12B
18B
DECODER
13B
SPEAK-ER
28B
GENERAL CONTROL UNIT (SYSTEM CONTROL)

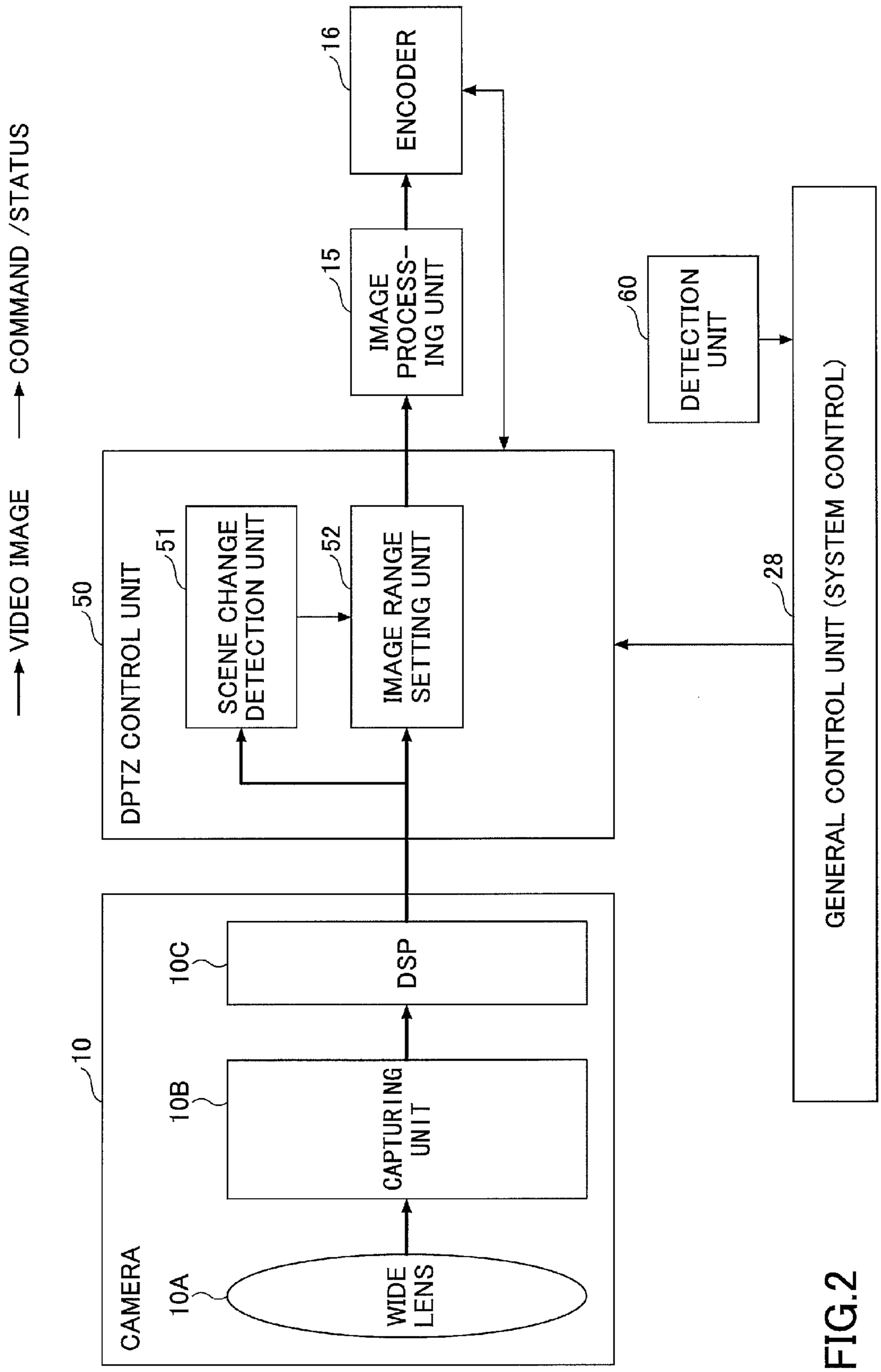
VIDEO IMAGE
COMMAND /STATUS
CAMERA
10
10A
WIDE LENS
10B
CAPTURING UNIT
10C
DSP
DPTZ CONTROL UNIT
50
51
SCENE CHANGE DETECTION UNIT
52
IMAGE RANGE SETTING UNIT
15
IMAGE PROCESS-ING UNIT
16
ENCODER
28
60
DETECTION UNIT
GENERAL CONTROL UNIT (SYSTEM CONTROL)

FIG.2

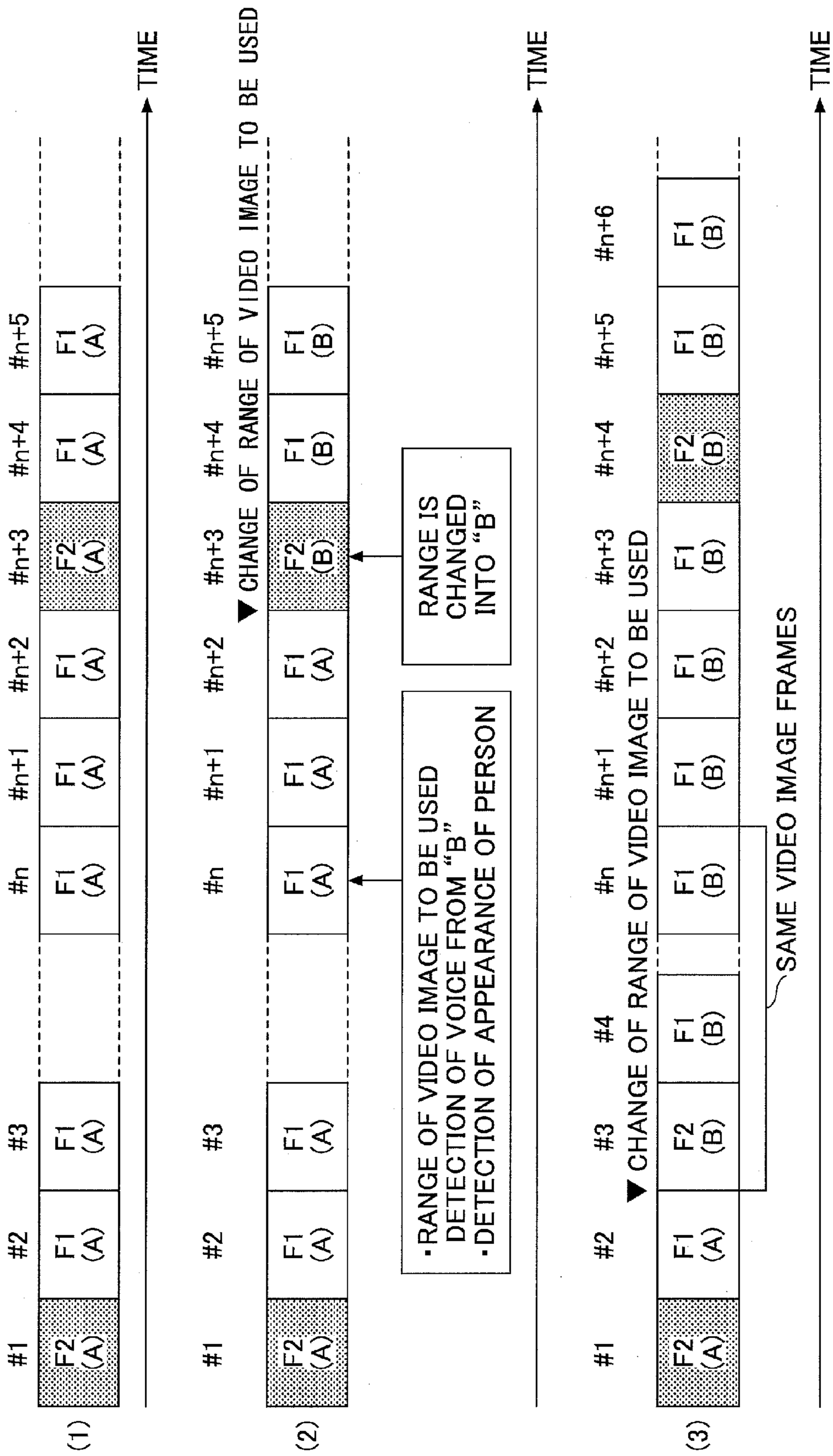
FIG.3
(1)
#1
#2
#3
#n
#n+1
#n+2
#n+3
#n+4
#n+5
F2 (A)
F1 (A)
TIME
(2)
▼CHANGE OF RANGE OF VIDEO IMAGE TO BE USED
F2 (B)
F1 (B)
RANGE IS CHANGED INTO "B"
▪RANGE OF VIDEO IMAGE TO BE USED
DETECTION OF VOICE FROM "B"
▪DETECTION OF APPEARANCE OF PERSON
(3)
#4
#n+6
▼CHANGE OF RANGE OF VIDEO IMAGE TO BE USED
SAME VIDEO IMAGE FRAMES

FIG.4

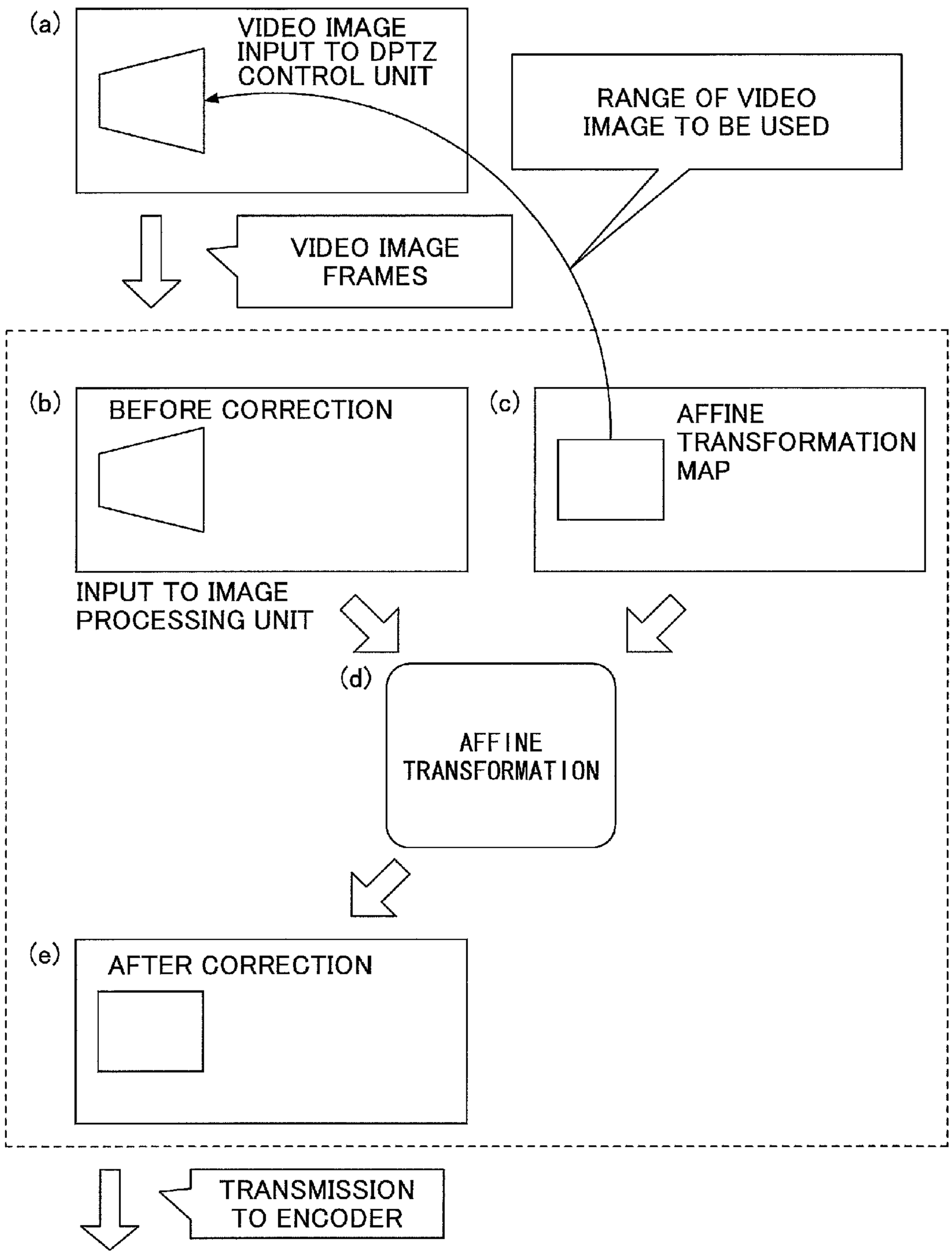
(a)
VIDEO IMAGE INPUT TO DPTZ CONTROL UNIT
RANGE OF VIDEO IMAGE TO BE USED
VIDEO IMAGE FRAMES
(b)
BEFORE CORRECTION
(c)
AFFINE TRANSFORMATION MAP
INPUT TO IMAGE PROCESSING UNIT
(d)
AFFINE TRANSFORMATION
(e)
AFTER CORRECTION
TRANSMISSION TO ENCODER

FIG.5

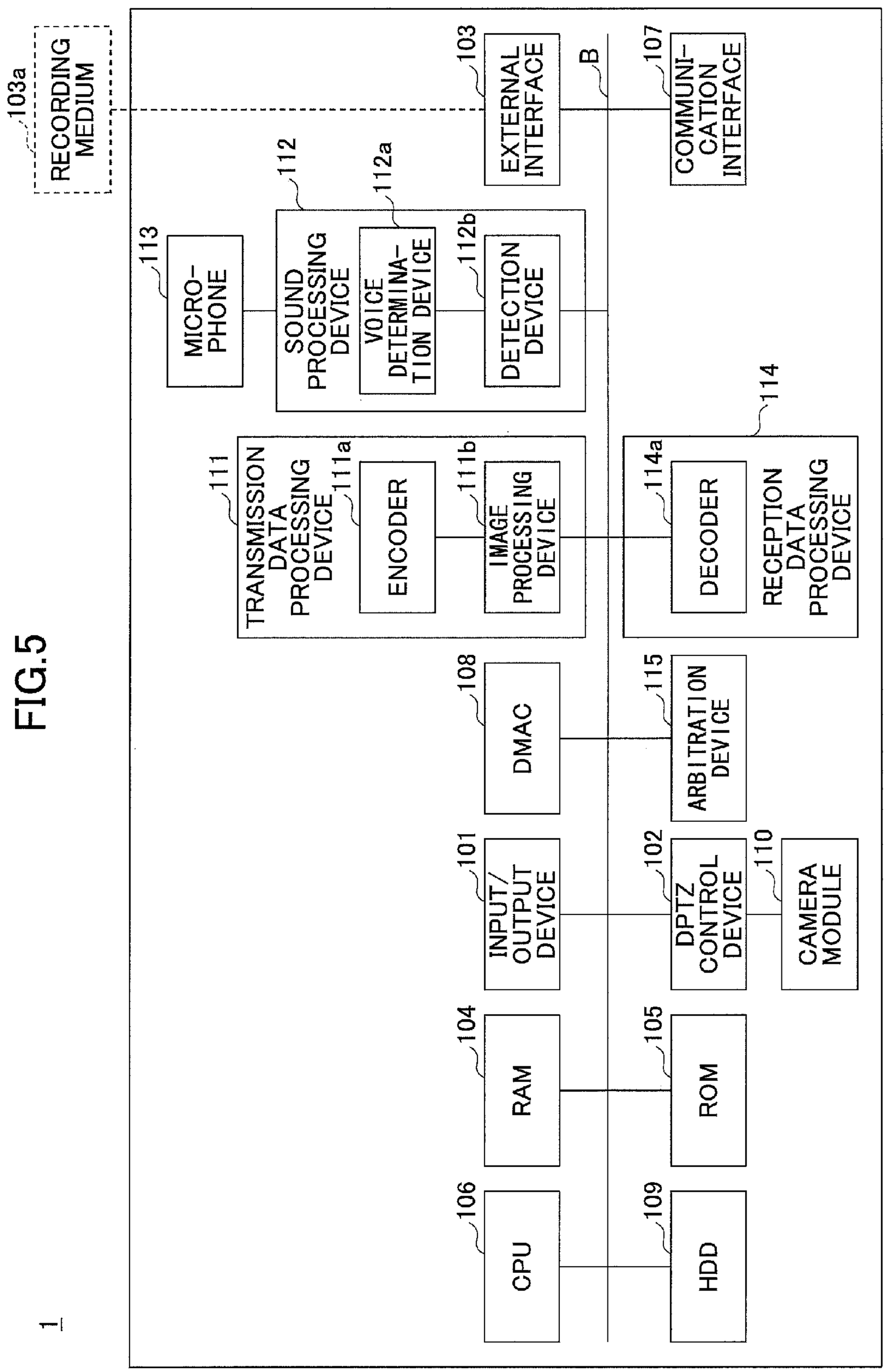
1
103a
RECORDING MEDIUM
113
MICRO-PHONE
112
SOUND PROCESSING DEVICE
112a
VOICE DETERMINA-TION DEVICE
112b
DETECTION DEVICE
103
EXTERNAL INTERFACE
B
107
COMMUNI-CATION INTERFACE
111
TRANSMISSION DATA PROCESSING DEVICE
111a
ENCODER
111b
IMAGE PROCESSING DEVICE
114
114a
DECODER
RECEPTION DATA PROCESSING DEVICE
108
DMAC
115
ARBITRATION DEVICE
101
INPUT/ OUTPUT DEVICE
102
DPTZ CONTROL DEVICE
110
CAMERA MODULE
104
RAM
105
ROM
106
CPU
109
HDD

FIG.6

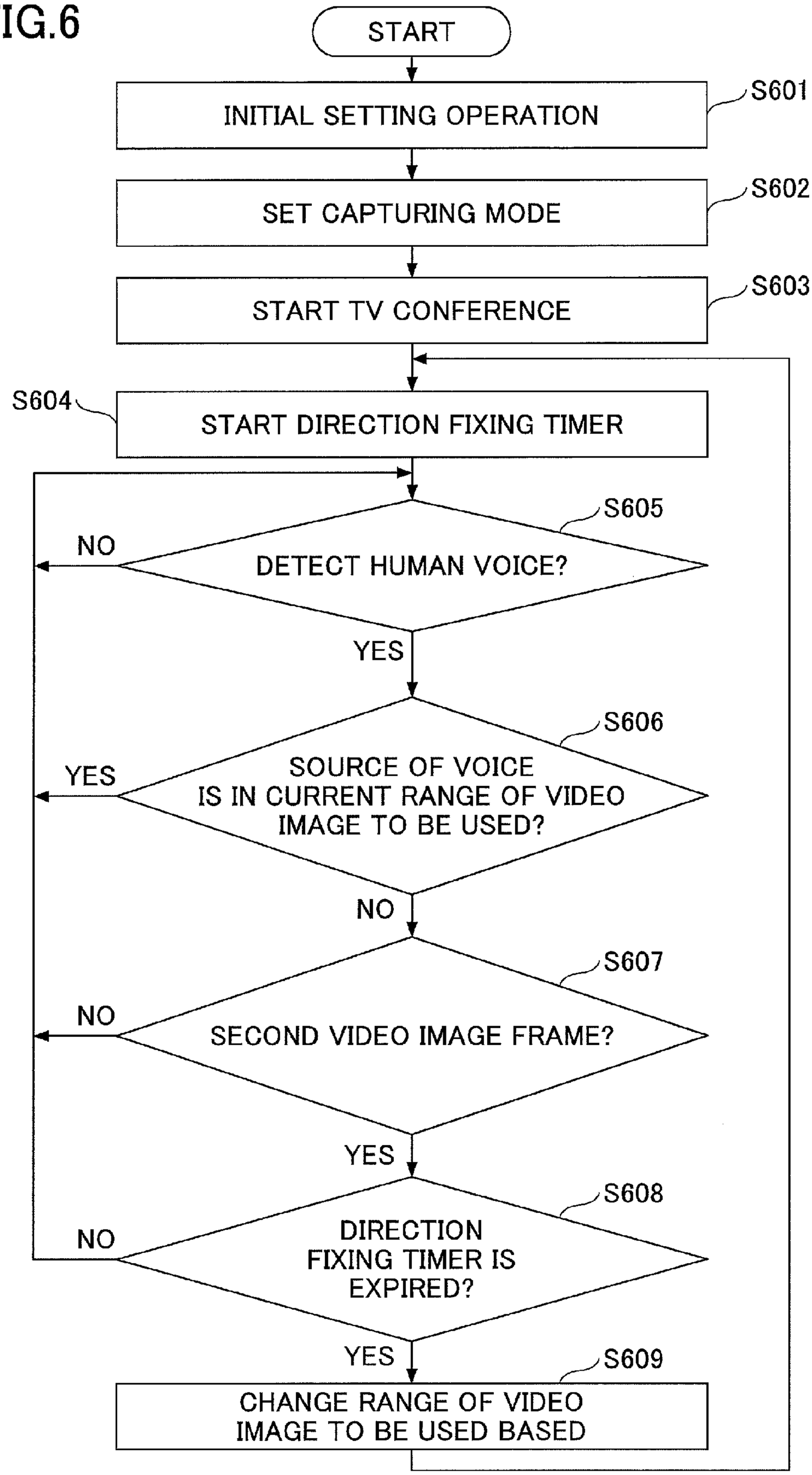
START
INITIAL SETTING OPERATION
S601
SET CAPTURING MODE
S602
START TV CONFERENCE
S603
S604
START DIRECTION FIXING TIMER
S605
DETECT HUMAN VOICE?
NO
YES
S606
SOURCE OF VOICE IS IN CURRENT RANGE OF VIDEO IMAGE TO BE USED?
YES
NO
S607
SECOND VIDEO IMAGE FRAME?
NO
YES
S608
DIRECTION FIXING TIMER IS EXPIRED?
NO
YES
S609
CHANGE RANGE OF VIDEO IMAGE TO BE USED BASED

FIG.7

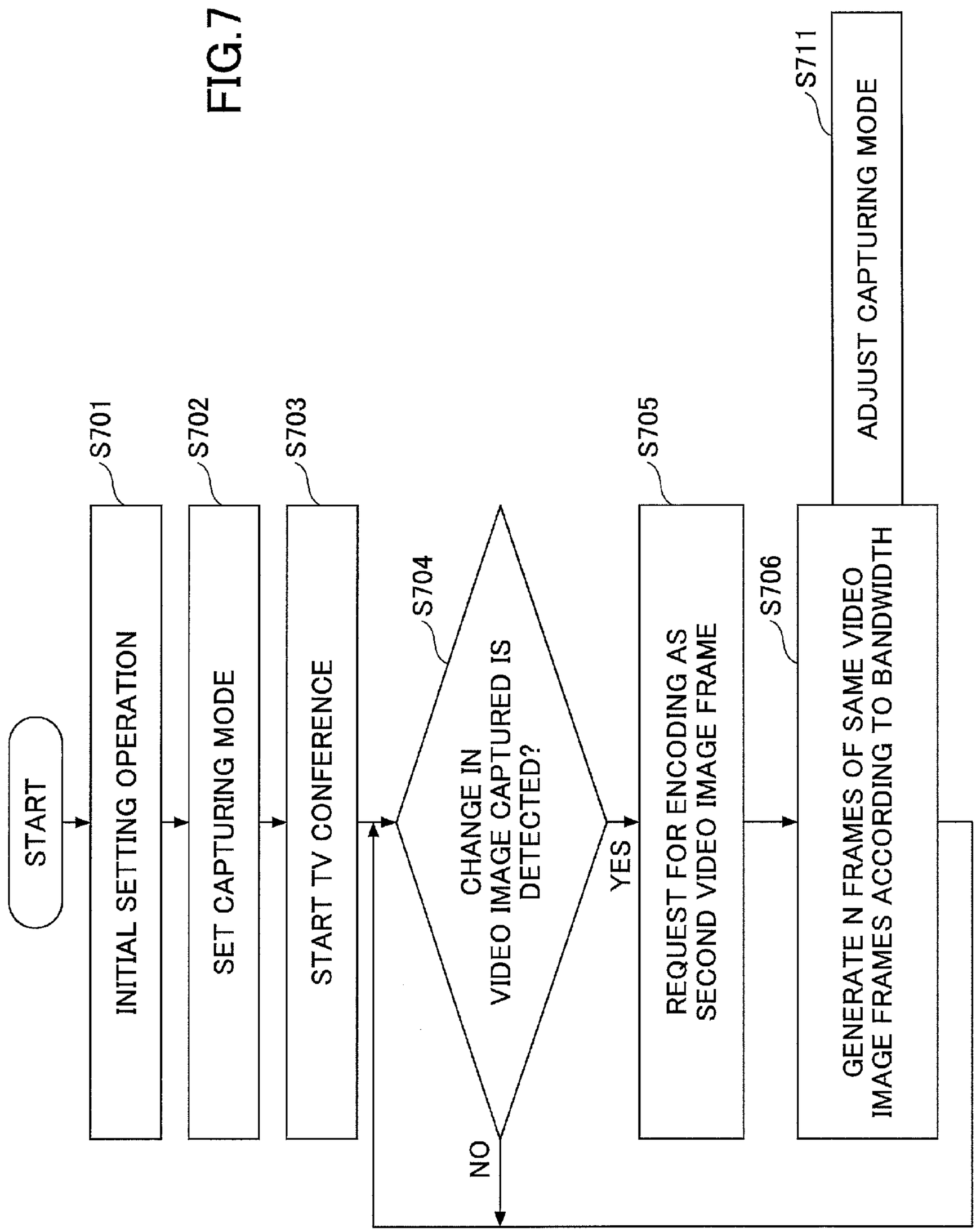
START
S701
INITIAL SETTING OPERATION
S702
SET CAPTURING MODE
S703
START TV CONFERENCE
S704
CHANGE IN IMAGE CAPTURED IS DETECTED?
YES
NO
S705
REQUEST FOR ENCODING AS SECOND VIDEO IMAGE FRAME
S706
GENERATE N FRAMES OF SAME VIDEO IMAGE FRAMES ACCORDING TO BANDWIDTH
S711
ADJUST CAPTURING MODE

VIDEO IMAGE PROCESSING APPARATUS AND RECORDING MEDIUM

BACKGROUND OF THE INVENTION

1. Field of the Invention

The present disclosure relates to video image processing apparatuses and recording media.

2. Description of the Related Art

A method of TV conference system is now distributed, in which a wide range of video image (image area) is captured by a camera including a wide-angle lens, and the displayed video image is generated from the captured video image.

In the method, in response to detecting that an object to be displayed is changed, a display range of the displayed video image is changed so as to include the object in the displayed video image.

The object to be displayed is changed in accordance with a state of the TV conference, regardless of current display range of the displayed video image. In the TV conference system, etc., encoding process is performed using inter-frame prediction. Therefore, when the object to be displayed is changed, the coding process cannot be performed effectively.

In order to solve the above described problem, a method is proposed, in which the inter-frame prediction is stopped, and instead, intra-frame prediction is used to perform the coding process in response to the change of the object to be displayed (e.g., Japanese Unexamined Patent Application Publication No. 2002-305733). However, in a case where the intra-frame prediction is used to perform the encoding process, transmission efficiency of the video image is degraded.

RELATED ART DOCUMENT

Patent Document

[Patent Document 1]: Japanese Unexamined Patent Application Publication No. 2002-305733

SUMMARY OF THE INVENTION

An object of the present disclosure is to improve an efficiency of the coding process when the object to be displayed is changed while suppressing degradation in the transmission efficiency of the video image.

The following configuration is adopted to achieve the aforementioned object.

In one aspect of the embodiment of the present disclosure, there is provided a video image processing apparatus including, a generation unit configured to generate a video image frame from an image area to be used included in a video image captured by a camera, a spatial area in the video image being defined by the image area to be used, an encoding unit configured to encode the video image frame into any one of a first video image frame and a second video image frame, wherein the first video image frame is generated through an encoding operation using inter-frame prediction, and the second video image frame is generated through an encoding operation using intra-frame prediction, and a detection unit configured to detect a trigger for changing the image area to be used to report the detection of the trigger to the generation unit, wherein the encoding unit reports a encoded video image frame type indicative of any one of the first video image frame and the second video image frame to the generation unit in advance, and in response to receiving the detection of the trigger, the generation unit changes the image area to be used in a video image frame based on the reported encoded video image frame type.

Other objects, features and advantages of the present disclosure will become apparent from the following detailed description when read in conjunction with the accompanying drawings.

BRIEF DESCRIPTION OF THE DRAWINGS

FIG. **1** is a diagram illustrating a video image processing system of an embodiment of the present disclosure.

FIG. **2** is a diagram illustrating example functional operations related to change of range of video image to be used.

FIG. **3** is a diagram illustrating an example timing at which the range of video image to be used is changed.

FIG. **4** is a diagram illustrating processes performed in an image processing unit.

FIG. **5** is an example hardware configuration of the video image processing apparatus.

FIG. **6** is a flowchart illustrating an example operation of the present embodiment in a case where the range of video image to be used is changed.

FIG. **7** is a flowchart illustrating an example operation of the present embodiment in a case where the video image captured by the camera is changed.

DETAILED DESCRIPTION OF THE PREFERRED EMBODIMENTS

First Embodiment

<System Configuration and Functional Configuration>

(1) General Arrangement of System

A video image processing system **100** will be described with reference to FIG. **1**.

In FIG. **1**, two video image processing apparatuses **1** are connected via a network **40** and a server **30**. Although two video image processing apparatuses **1** are illustrated in FIG. **1**, three or more video image processing apparatuses **1** may be connected via a network **40** and a server **30**.

In a case where the video image processing apparatus **1**A is used at a transmission side, and the video image processing apparatus **1**B is used at a reception side, video image captured by the video image processing apparatus **1**A is transmitted to the video image processing apparatus **1**B via a network **40** and a server **30**.

(2) Functional Configuration of Video Image Processing Apparatus (General Arrangement)

A functional configuration of the video image processing apparatus **1** will be described with reference to FIG. **1**.

The video image processing apparatus **1** includes a camera **10**, a display **12**, a speaker **13**, a microphone array **26**, a DPTZ (Digital Pan Tilt Zoom) control unit **50**, a terminal apparatus **14** and a general control unit (system control) **28**.

The terminal apparatus **14** includes an image processing unit **15**, an encoder **16**, a network processing unit **17**, a decoder **18**, a network state detection unit **20**, a counter station function determination unit **22**, a voice determination unit **24**, and a detection unit **60**.

The camera **10** captures video images, and transmits the captured video images to the DPTZ control unit **50**. The DPTZ control unit **50** generates frames of video images by selecting a range to be used from the video image captured by the camera **10**, and transmits the generated frames to the terminal apparatus **14**.

The microphone array **26** receives sound input, and transmits sound data corresponding to the received sound to the terminal apparatus **14**.

The terminal apparatus **14** encodes received frames of the video image and received sound data, thereby transmitting the encoded data to the video image processing apparatus **1**.

The terminal apparatus **14** decodes the encoded frames of the video image and the encoded sound data transmitted from the video image processing apparatus **1** of a communication counterpart. The decoded frames of the video image and the decoded sound data are output to the display **12** and the speaker **13**.

The display **12** displays video image of the frames received from terminal apparatus **14**. The speaker **13** outputs sound of the sound data received from terminal apparatus **14**.

In the following, the functional configuration of the video image processing apparatus **1** will be described, where a relationship between the DPTZ control unit **50** and the encoder **16** is mainly described. Additionally, the DPTZ control unit **50** is an example of generation unit.

The DPTZ control unit **50** generates frames of video image by selecting a range to be used from the video image captured by the camera **10**. Here, the range to be used is defined as a spatial range in the video image.

The encoder **16** receives the frames of the video image from the DPTZ control unit **50** via the image processing unit **15**. The encoder **16** encodes the frames of the video image, where the encode operation is performed by using inter-frame prediction to generate a first video image frame and using intra-frame prediction to generate a second video image frame.

Here, the first video image frame (the video image frame encoded in a first video image frame type) may be a P (Predicted Frame) frame encoded through forward prediction, or may be a B (Bi-directional Predicted Frame) frame encoded through forward prediction and backward prediction. Additionally, the B frame is unlikely used in the TV conference that requires real time response, etc., because of large encoding delay for the B frame.

The second video image frame (the video image frame encoded in a second video image frame type) is an I (Intra-coded Frame) frame encoded without using the inter-frame prediction

The detection unit **60** detects a trigger used for changing a range of video image (image area) to be used, and reports the detection of the trigger to the DPTZ control unit **50**.

The trigger means an occurrence of sound, an appearance of a person, and the like. For example, in a case where a speaker (a person who is currently speaking) changes during the TV conference, the detection unit **60** detects the change of the speaker. In a case where the detection unit **60** detects that a different person is now speaking, the range of video image to be used is determined to include a new speaker. Also, in a case where the video image processing apparatus **1** is used for monitoring, the detection unit **60** detects that a person appears in a monitoring range. In a case where an appearance of a person is detected, the range of video image to be used is determined to include the detected person.

The encoder **16** reports the type of the video image frame to the DPTZ control unit **50** in advance.

In response to receiving the trigger, the DPTZ control unit **50** changes the range of video image to be used to be used based on the reported video image frame type.

Preferably, the DPTZ control unit **50** changes the range of video image to be used at timing when one of second video image frames is input.

That is, preferably, the DPTZ control unit **50** recognizes the video image frame type reported from the encoder **16** in advance, and changes the range of video image to be used in one of the second video image frames input to the encoder **16**.

When the range of video image to be used is changed in the second video image frame, encoding efficiency is not degraded. Also, a number of the second video image frames is not increased. Therefore, degradation of the transmission efficiency of the video image due to increase of the second video image frames can be avoided.

The DPTZ control unit **50** may change the range of video image to be used in response to receiving the trigger. In this case, the DPTZ control unit **50** transmits information indicating that the range of video image to be used is changed to the encoder **16**.

Preferably, the encoder **16** encodes a video image frame that is output just after receiving the information indicative of the change of the range of video image into the second video image frame.

Also, the DPTZ control unit **50** may generate N frames subsequent to the first output frame as the same video image frames. Additionally, "N" is an arbitrary natural number.

The encoder **16** encodes the N frames subsequent to the first output frame by using inter-frame prediction. Therefore, encoding efficiency of the N frames is not degraded. Although, a number of the second video image frames increases by 1, the degradation of the transmission efficiency can be suppressed because the subsequent N frames are generated as the same video image frames.

Additionally, when the video image processing apparatus **1** reports the video image processing apparatus **1** of the communication counterpart that the same continuous N frames are generated, the N frames themselves do not need to be transmitted to the video image processing apparatus **1** of the communication counterpart.

The general control unit **28** performs setting operation of respective functional units of the video image processing apparatus **1** in accordance with a user's instruction, and performs status management operation, and the like.

The microphone array **26** collects the sound, and transmits data of the collected sound to the detection unit **60** and the voice determination unit **24**. Additionally, the microphone array **26** may be formed by a plurality of microphone elements.

The display **12** displays the video image of the video image frames transmitted from the video image processing apparatus **1** of the communication counterpart.

The speaker **13** outputs sound of the sound data transmitted from the video image processing apparatus **1** of the communication counterpart.

The image processing unit **15** performs an image processing on the video image frames received from the DPTZ control unit **50**. Specific contents of the image processing will be described below.

The voice determination unit **24** forwards the sound data received from the microphone array **26** to the encoder **16**. The voice determination unit **24** may extract data corresponding to voice from the sound data to transmit the extracted data to the encoder **16**. The encoder **16** encodes the received sound data.

The network state detection unit **20** detects a state of the network **40**, and reports the detected state to the encoder **16**. For example, the network state of the network **40** indicates a degree of congestion.

The counter station function determination unit **22** acquires information related to decoding function, etc., of

the video image processing apparatus **1** of the communication counterpart, and reports the acquired information to the encoder **16**.

The encoder **16** determines a transmission mode based on information acquired from the network state detection unit **20**, the counter station function determination unit **22**, and the voice determination unit **24** to transmit the encoded video image frames and sound data to the network processing unit **17**.

The network processing unit **17** transmits the encoded video image frames and encoded sound data received from the encoder **16** to the video image processing apparatus **1** of the communication counterpart.

The decoder **18** decodes the video image frames and sound data received from the video image processing apparatus **1** of the communication counterpart to transmit the decoded video image frames to the display **12** and to transmit the decoded sound data to the speaker **13**.

Additionally, a function in which the camera **10** and the DPTZ control unit **50** are integrated may be referred to as a camera module. The encoder **16** is an example of encoding unit.

(3) Functional Configuration of Video Image Processing Apparatus (Setting Range of Video Image to be Used)

Operations of respective units for setting the range of video image to be used will be described with reference to FIG. **2**.

The camera **10** includes a wide-angle lens **10**A, a capturing unit **10**B, and a DSP (Digital Signal Processor) **100**.

First, an internal configuration of the camera **10** will be described. The capturing unit **10**B captures wider video image by using the wide-angle lens **10**A in comparison to the image captured by a usual lens, and transmits data of the captured video image to the DSP **100**. The DSP **100** performs a digital signal processing on the captured data, and transmits the video image frames generated through the digital signal processing to the DPTZ control unit **50**.

In the following, configuration of the DPTZ control unit **50** will be described. The DPTZ control unit **50** includes a scene change detection unit **51** and a image range setting unit **52**.

The image range setting unit **52** selects the range used in the video image (range of video image to be used) received from the camera **10**, and transmits the selected range to the image processing unit **15**. The range of video image to be used can be dynamically set on a frame-by-frame basis. The range of video image to be used is set based on an instruction of the general control unit **28**.

The change of the range of video image to be used causes the user to feel as if the camera **10** dynamically moved up-down, or left-right to change an object to be captured by the camera **10**. The change of the range of video image to be used may be referred to as "digital-pan/tilt".

A size of the range of video image to be used is determined based on a zoom magnification setting and resolution of the video image transmitted to the video image processing apparatus **1** of the communication counterpart.

The scene change detection unit **51** analyzes the video image received from the camera **10** to detect a change of an object to be captured by the camera **10**. For example, the scene change detection unit **51** creates a histogram of respective video image frames received from the camera **10**, and the scene change detection unit **51** may detect the trigger based on a change of the created histogram to report the trigger to the image range setting unit **52**.

Additionally, the detection unit may be a unit in which the scene change detection unit **51** and the detection unit **60** are integrated.

The general control unit **28** reports coordinate information of the range of video image to be used to the image range setting unit **52**. Additionally, an operation for changing the range of video image to be used may be performed in response to the user's operation in the video image processing apparatus **1** of the communication counterpart as well as the user's operation in the video image processing apparatus **1**.

The general control unit **28** determines whether the source of a voice is included in the current range of video image to be used in response to receiving a report related to the detection of the voice from the detection unit **60**.

In a case where the source of the voice is not included in the current range of video image to be used, an instruction to change the range of video image to be used is given to the DPTZ control unit **50**.

The detection unit **60** detects the position and the direction of the source of the voice based on information of the voice input from the microphone array **26**. The detection unit **60** reports the detected position and the direction to the general control unit **28**.

Additionally, a method of detection may be arbitrarily chosen. For example, a known method of detection may be used. The detection unit **60** is achieved by a DSP, etc., using the chosen method of detection. For example, operation concept of the microphone array **26** is described with regard to the detection of the source of the voice. A microphone array in which 8 microphones are arranged in a line is exemplified. In the microphone array, sound signals output from respective microphones are delayed by delay devices (a plurality of delay devices are provided for each of the microphones). Directionality can be controlled by adding the delayed sound signals by an adder. Spot**1** is a main point for collecting the sound signal, where the main point is set in a space. Spot**2** (left side of the main point) and Spot**3** (right side of the main point) are search points for searching a position of the sound source, where the search point is set in the space.

The sound signals respectively output from the microphones are amplified by amplifiers, and an "A"-th delay devices adds a delay to the sound signals. The sound signals delayed by the delay devices are added by an adder to become a main signal.

An amount of the delay added by the "A"-th delay devices are set so that the sound signals from the Spot**1** collected by the respective microphones have the same phase when the sound signals are added by the adder X. Thus, the sound signals from the main point Spot**1** reaching the respective microphones are emphasized.

On the other hand, the sound signals coming from directions other than the direction of Spot**1** are not so emphasized as the sound signal coming from the direction of Spot**1** because the sound signals coming from other directions have time differences other than the time difference corresponding to Spot**1**, and sound signals coming from other directions do not have the same phase when the sound signals are added after the collection. Thus, the directionality is set to be sensitive to the direction of the main point Spot**1**.

Sound signals delayed by "B"-th delay device are added by the adder Y to generate a search signal Out**2**. An amount of the delay added by the "B"-th delay devices are set so that the sound signals from the search point Spot**2** collected by the respective microphones have the same phase when the

sound signals are added by the adder Y. For example, a position of Spot**2** is set in right side of the Spot**1** viewed from the microphone array.

On the other hand, sound signals delayed by "C"-th delay device are added by the adder Z to generate a search signal Out**3**. The amount of the delay added by the "C"-th delay devices are set so that the sound signals from the search point Spot**3** collected by the respective microphones have the same phase when the sound signals are added by the adder Z. A position of Spot**3** is set in left side of the Spot**1** viewed from the microphone array. Also, Spot**2** and Spot**3** are set so as to be line symmetry with respect to a line L**1** connecting a center point C of the microphone array and Spot**1**. That is, an angle between line L**1** and line L**2** connecting the center point C and Spot**2** is θ, and an angle between line L**1** and line L**3** connecting the center point C and Spot**3** is θ.

For example, in a case where the sound source is located in the direction of Spot**1**, the main signal Out**1** increases, whereas the level of the Out**1** decreases as the sound source moves left or right. On the other hand, levels of the search signals Out**2** and Out**3** are the same when the sound source is located in the direction of Spot**1**, whereas the level of Out**2** increases and level of Out**3** decreases as the sound source moves in a negative direction (direction of Spot**2**). Also, the level of Out**3** increases and level of Out**2** decreases as the sound source moves in a positive direction (direction of Spot**3**). Hence, the direction of the sound source, that is, the source of the voice, can be detected by detecting the difference between levels of the search signals Out**2** and Out**3**.

As described above, a first directionality for collecting sound in the direction of the sound source is set based on the detected difference between levels of the search signals Out**2** and Out**3**. Therefore, sound from the sound source can be corrected even if the sound source moves. Also, upon the first directionality (main point Spot**1**) changing in accordance with a position of the sound source, a second directionality (search point Spot**2**) and a third directionality (search point Spot**3**) for searching the sound source are also changed. Therefore, sensitivity of sound source detection can be optimized in accordance with the position of the sound source, that is, the source of the voice.

The encoder **16** reports the type of the video image frame corresponding to respective video image frames to the DPTZ control unit **50**. Also, in response to the report of the change of the range of video image to be used from the DPTZ control unit **50**, the encoder **16** may generate a video image frame output just after the report as the second video image frame.

(3) Timing of Change of Range of Video Image to be Used

Timing of the change of the range of video image to be used will be described with reference to FIG. **3**.

FIG. **3**(**1**) illustrates transmission of video image frames from the encoder **16** to the video image processing apparatus **1** of the communication counterpart, where the encoder **16** receives the video image frames from the DPTZ control unit **50**, and encodes the received frames to generate a frame of the first video image frame or a frame of the second video image frame. F**1** indicates the first video image frame, and F**2** indicates the second video image frame. Also, "A" indicates the range of video image to be used in the video image frame received from the camera **10**.

In FIG. **3**(**1**), the first video image frame and the second video image frame are repeatedly transmitted in accordance with a predetermined sequence.

FIG. **3**(**2**) illustrates types of the transmitted frames when the range of video image to be used is changed from "A" to "B".

In this case, at timing "#n", the detection unit **60** detects voice in a direction corresponding to the range of video image to be used "B" that is different from the current range "A", and the detected voice is reported to the DPTZ control unit **50**. The report is transmitted via the general control unit **28**. Or, the scene change detection unit **51** detects that a person appears in the range of video image to be used "B", and reports the detection to the DPTZ control unit **50**. The DPTZ control unit **50** determines that the range of video image to be used is changed from "A" to "B".

The DPTZ control unit **50** waits until the second video image frame is transmitted, then, changes the range of video image to be used from "A" to "B".

Specifically, the DPTZ control unit **50** generates the second video image frame in which the range of video image to be used is changed from "A" to "B". The DPTZ control unit **50** transmits the generated second video image frame to the encoder **16** via the image processing unit **15**.

In the example presented as FIG. **3**(**2**), the second video image frame F**2** is transmitted to the video image processing apparatus **1** of the communication counterpart at timing "#n+3", and the DPTZ control unit **50** sets the range of video image to be used in the second video image frame at "#n+3" to be "B". Additionally, in a case where the video image processing apparatus **1** is used for monitoring, etc., a light may light at the timing when the range of video image to be used is changed.

According to the operation process described above, the encoding efficiency is not degraded because the encoder **16** changes the range of video image to be used in the frame encoded by using intra-frame prediction. That is, a number of the second video image frames does not increase because the range of video image to be used is changed in the frame that is reported, in advance, to be transmitted as the second video image frame. Therefore, the degradation of the transmission efficiency due to increase of the second video image frames can be avoided.

Similar to FIG. **3**(**2**), FIG. **3**(**3**) also illustrates types of the transmitted frames when the range of video image to be used is changed from "A" to "B".

In FIG. **3**(**3**), "the change of the range of video image to be used", which cannot be controlled by the DPTZ control unit **50** occurs.

For example, "the change of the range of video image to be used, which cannot be controlled by the DPTZ control unit **50**" occurs in a case where the camera **10** is moved, or a light is lit at timing when a person is detected.

In FIG. **3**(**3**), the range of video image to be used is changed from "A" to "B" in the video image frame at #3. In this case, during a predetermined period, the DPTZ control unit **50** generates the same video image frames as the video image frame at #3. In the example presented as FIG. **3**(**3**), the video image frames from #3 to #n are the same. Thus, the DPTZ control unit **50** generates the same video image frames. Therefore, the video image displayed in the video image processing apparatus **1** of the communication counterpart becomes a still image during the predetermined period.

Additionally, the DPTZ control unit **50** or the general control unit **28** preferably instructs the encoder **16** to treat the video image frame at #3 as the second video image frame.

According to the operation process described above, the DPTZ control unit **50** transmits the same video image

frames during the predetermined period in a case where "the change of the range of video image to be used, which cannot be controlled by the DPTZ control unit **50**" occurs. The degradation of the encoding efficiency can be suppressed because the encoder **16** performs the encoding operation on the same video image frame. The encoding operation for generating the second video image frame is performed at the first frame (that is, frame at #3) of the same video image frames. However, the degradation of the encoding efficiency can be suppressed because the DPTZ control unit **50** generates the same video image frames during a predetermined period after #4.

(4) Generation of Displayed Image

A process for generating a video image frame to be input into the encoder **16** based on the video image captured by the camera **10** will be described with reference to FIG. **4**.

In the present embodiment, the camera **10** generate the video image, while the DPTZ control unit **50** generates the video image frame from the range of video image to be used. The generated video image frame is encoded.

The video image may be distorted because the camera **10** captures a wide range of the video image by using the wide-angle lens **10**A. The image processing unit **15** performs a distortion correction operation on the video image frames generated by the DPTZ control unit **50** to correct the distortion. The above described correction operation is referred to as AFFINE transformation.

The image processing unit **15** includes an AFFINE transformation map for performing the distortion correction operation. The AFFINE transformation map records processes in the AFFINE transformation to be performed on respective pixels of the video image captured with the wide-angle lens. By performing the processes on the respective pixels, the distortion is corrected.

The range of video image to be used is determined based on a size of the video image frame, a position of a speaker (person) in the video image, and the like.

As illustrated in FIG. **4**(*a*), the DPTZ control unit **50** generates the video image frame based on the captured video image and the range of video image to be used designated by the general control unit **28**. Specifically, the DPTZ control unit **50** generates the video image frame by extracting the image corresponding to the designated range of video image to be used from the captured video image. The DPTZ control unit **50** transmits the generated video image frame to the image processing unit **15**. Additionally, the DPTZ control unit **50** may acquire coordinate information indicating the range of video image to be used from the image processing unit **15**. The coordinate information is determined by the image processing unit **15** based on the range of video image to be used, a display size of the video image frame, and the like.

As presented as FIG. **4**(*b*), the video image of the video image frame generated by the DPTZ control unit **50** is distorted. In order to correct the distortion, the image processing unit **15** performs the AFFINE transformation on the video image frame by using the AFFINE transformation map (FIGS. **4**(*b*), (*c*), and (*d*)).

A video image frame is generated, in which the distortion of the video image has been corrected, through the AFFINE transformation (FIG. **4**(*e*)). The video image frame in which the distortion has been corrected is transmitted to the encoder **16** to be encoded therein.

<Hardware Configuration>

For example, the video image processing apparatus **1** has a hardware configuration as illustrated in FIG. **5**.

The video image processing apparatus **1** includes an input/output device **101**, a DPTZ control device **102**, an external interface **103**, a RAM **104**, a ROM **105**, a CPU **106**, a communication interface **107**, a DMAC (Direct Memory Access Controller) **108**, a HDD **109**, a camera module **110**, a transmission data processing device **111**, a sound processing device **112**, a microphone **113**, a reception data processing device **114** and an arbitration device **115**, where the respective devices are connected through a bus B.

The input/output device **101** displays the video image frame transmitted from the video image processing apparatus **1** of the communication counterpart by using LED, and the like. The input/output device **101** outputs the sound transmitted from the video image processing apparatus **1** of the communication counterpart by using the speaker. The input/output device **101** includes an interface for connecting an external monitor and speaker, the video image and sound can be output from the external monitor and speaker through the interface. Also, the input/output device **101** displays a state of the video image processing apparatus **1**, and the like.

The input/output device **101** accepts settings, operations, etc., related to the video image processing apparatus **1** from the user of the video image processing apparatus **1**.

The communication interface **107** performs communications with the video image processing apparatus **1** of the communication counterpart, the server **30**, etc., through a wired or wireless network **40**. The communication interface **107** detects a state of the network **40**, and determines whether the network **40** is available. Also, the communication interface **107** acquires information related to the video image processing apparatus **1** of the communication counterpart.

Also, the HDD **109** is an example of non-volatile storage device for storing programs and data. The programs and data including an OS as basic software for controlling entire video image processing apparatus **1**, application software for providing functions on the OS, etc., are stored. Additionally, a drive device (e.g., solid state drive: SSD) using flash memory as a recording medium may be provided instead of the HDD **109** in the video image processing apparatus **1**.

The external interface **103** is an interface for an external device. The external device includes a recording medium **103***a*. Thus, the video image processing apparatus **1** can read and/or write data from/into the recording medium **103***a* through the external interface **103**. The recording medium **103***a* includes a flexible disc, a CD, a DVD, a SD memory card, a USB memory, and the like.

The ROM **105** is an example of non-volatile semiconductor memory (storage device) that can hold programs and data after the power is turned off. Programs and data including a BIOS, OS setting, network setting, etc., which are executed when starting the video image processing apparatus **1** are stored in the ROM **105**.

The camera module **110** includes a wide-angle lens **10**A, and performs capturing operation in accordance with instruction from the CPU **106**. The DPTZ control device **102** performs an operation for extracting the range of video image to be used from the video image captured by the camera module **110**, and stores the range of video image to be used in the RAM **104** after completing the operation. The DPTZ control device **102** receives a report indicating a detection of sound from a detection device **112***b*, thereby performing the operation for changing the range of video image to be used. Also, the DPTZ control device **102** performs the operation for changing the range of video image to be used according to the changed video image captured by the camera module **110**.

The microphone **113** collects sound, and transmits data of the collected sound to the sound processing device **112**.

The sound processing device **112** includes a voice determination device **112***a* and a detection device **112***b*. The voice determination device **112***a* determines human voice included in the data of sound collected by the microphone **113**, and transmits the determination result to the detection device **112***b*. The determination device **112***b* determines whether a sound source of the human voice is changed, and reports the change to the DPTZ control device **102** in a case where it is determined that the sound source has changed.

The transmission data processing device **111** includes an encoder **111***a* and an image processing device **111***b*. The image processing device **111***b* performs the AFFINE transformation, etc., on the range of video image to be used in the video image generated by the DPTZ control device **102**. The encoder **111***a* encodes data of the range of video image to be used and sound data. The transmission data processing device **111** transmits the encoded video image data and sound data to the communication interface **107**.

The reception data processing device **114** includes a decoder **114***a*. The decoder **114***a* decodes the data received from the video image processing apparatus **1** of the communication counterpart via the communication interface **107**. The reception data processing device **114** transmits the decoded video image data and sound data to the input/output device **101**.

The DMAC **108** provides functions for directly transmitting/receiving data without using the CPU **106** between respective devices included in the video image processing apparatus **1**. For example, data of the range of video image to be used processed by the DPTZ control device **102** is stored in the RAM **104**, then retrieved from the RAM **104** by the transmission data processing device **111**. The transmission data processing device **111** performs an encoding operation and an image processing operation by using the RAM **104**. The communication interface **107** acquires the sound data and video image data processed by the transmission data processing device **111** from the encoder **111***a*, and transmits them to the video image processing apparatus **1** of the communication counterpart. Also, data received from the video image processing apparatus **1** of the communication counterpart via the communication interface **107** is acquired by the reception data processing device **114**. The reception data processing device **114** performs a decoding operation by using the RAM **104**. The decoded video image data and sound data are acquired from the decoder **114***a* by the input/output device **101**. The input/output device **101** outputs the video image data and the sound data.

Additionally, the DMAC **108** may be provided for each of devices included in the video image processing apparatus **1**.

The arbitration device **115** arbitrates operations between devices such as the CPU **106** and the DMAC **108** included in the video image processing apparatus **1**, which devices serve as master devices. For example, the arbitration device **115** arbitrates authority for accessing the RAM **104** and the bus B taking account of entire performance of the video image processing apparatus **1**. The RAM **104** is an example of a volatile semiconductor memory (storage device) for temporarily storing programs and data. The RAM **104** stores the data of the range of video image to be used that is extracted by the DPTZ control device **102** from the video image captured by the camera module **110**. The RAM **104** provides work memory area for the CPU **106**, the transmission data processing device **111** (encoder **111***a* and image processing device **111***b*), and the reception data processing device **114** (decoder **114***a*). The RAM **104** may provide the work memory area for the sound processing device **112**.

The CPU **106** is a processor for achieving controls and functions of entire video image processing apparatus **1** by retrieving the programs and data from the ROM **105**, HDD **109**, etc., to load the programs onto the RAM **104** and execute the programs.

Respective functions of the video image processing apparatus **1** illustrated in FIG. **1** are achieved by operating hardware of the video image processing apparatus **1** illustrated in FIG. **5** in a manner described below.

The DPTZ control unit **50** is achieved by operating the CPU **106** and the DPTZ control device **102** in accordance with the program stored in the ROM **105**, or the like.

The image processing unit **15** is achieved by operating the CPU **106** and the image processing device **111***b* in accordance with the program stored in the ROM **105**, or the like.

The encoder **16** is achieved by operating the CPU **106** and the encoder **111***a* in accordance with the program stored in the ROM **105**, or the like.

The network processing unit **17**, the network state detection unit **20** and the counter station function determination unit **22** are achieved by operating the CPU **106** and the communication interface **107** in accordance with the program stored in the ROM **105**, or the like.

The voice determination unit **24** is achieved by operating the CPU **106** and the voice determination device **112***a* in accordance with the program stored in the ROM **105**, or the like.

The detection unit **60** is achieved by operating the CPU **106** and the detection device **112***b* in accordance with the program stored in the ROM **105**, or the like.

The decoder **18** is achieved by operating the CPU **106** and the decoder **114***a* in accordance with the program stored in the ROM **105**, or the like.

The general control unit **28** is achieved by operating the CPU **106** in accordance with the program stored in the ROM **105**, or the like.

The camera **10** is achieved by operations of the camera module **110**. The microphone array **26** is achieved by operations of the microphone **113**. The display **12** and the speaker **13** are achieved by operations of the input/output device **101**.

Correspondence between the respective functions and hardware of the video image processing apparatus **1** described above is not a limiting example. A part of functions may be also achieved by executing programs stored in the ROM, or the like. Further, a part of functions may be achieved by dedicated hardware (not by programs).

<Operation Process>

(1) Operation Process—1

In the following, an operation process of an embodiment of the present disclosure will be described with reference to FIG. **6**. FIG. **6** is a flowchart illustrating an example operation of the present embodiment in a case where the range of video image to be used changes in the second video image frame.

In step S**601**, the user of the video image processing apparatus **1** performs an initial setting operation for the video image processing apparatus **1**. Thus, the video image can be captured by the camera **10**.

In step S**602**, the user of the video image processing apparatus **1** sets a capturing mode of the camera **10**. For example, the user sets the capturing mode of the camera **10** such as a photometry condition.

In steps S**603**, the video image processing apparatus **1** transmits a connection request to the video image processing

apparatus **1** of the communication counterpart, thereby performing processes related to starting TV conference. The video image processing apparatus **1** may start performing the processes related to starting TV conference in response to receiving the connection request from the video image processing apparatus **1** of the communication counterpart.

In step S**604**, the video image processing apparatus **1** starts a direction fixing timer. The direction fixing timer is provided for suppressing frequent changes of the range of video image to be used in the video image captured by the camera **10**. The range of video image to be used may frequently change in a case where a TV conference in which many people are participating is held and a function for following speaker movement is activated in the video image processing apparatus **1**. The participants of the TV conference may feel strange in a case where the range of video image to be used changes frequently.

Therefore, the direction fixing timer is started to suppress the frequent changes of the range of video image to be used. The duration of time for the direction fixing timer can be set by the user of the video image processing apparatus **1** or by the user of the video image processing apparatus **1** of the communication counterpart.

In steps S**605**, in a case where the detection unit **60** detects a human voice (Yes in step S**605**), the process proceeds to step S**606**. In a case where the human voice is not detected (No in step S**605**), the process returns to step S**605**.

In step S**606**, the detection unit **60** reports the detection of the human voice to the general control unit **28**. The report includes information indicating the position of the person who is speaking. The general control unit **28** determines whether the position of the person who is speaking is included in the current range of video image to be used. In a case where the position of the person who is speaking is included in the current range of video image to be used (Yes in step S**606**), the process returns to step S**605**. On the other hand, in a case where the position of the person who is speaking is not included in the current range of video image to be used (No in step S**606**), the general control unit **28** instructs the DPTZ control unit **50** to change the range of video image to be used. The DPTZ control unit **50** performs a process of step S**607**.

Additionally, the detection unit **60** may report the detection of the human voice to the DPTZ control unit **50**, and the DPTZ control unit **50** may determine whether to change the range of video image to be used.

In step S**607**, the DPTZ control unit **50** determines whether the type of the video image fame to be generated is the second video image frame.

In a case where the type of the video image frame to be generated as the next frame is a second video image frame (Yes in step S**607**), the process proceeds to step S**608**. On the other hand, in a case where the type of the video image frame to be generated as the next frame is not a second video image frame (No in step S**607**), the process returns to step S**605**.

In step S**608**, the DPTZ control unit **50** determines whether the direction fixing timer is expired. In a case where the direction fixing timer is expired (Yes in step S**608**), the process is forwarded to step S**609**. On the other hand, in a case where the direction fixing timer is not expired, the process returns to step S**605**.

In step S**609**, the DPTZ control unit **50** changes the range of video image to be used based on information detected by the detection unit **60**. The process returns to step S**604** after the range of video image to be used is changed.

(2) Operation Process—2

In the following, another operation process of the present embodiment will be described with reference to FIG. **7**. FIG. **7** is a flowchart illustrating an example operation of the present embodiment in a case where the video image captured by the camera **10** is changed due to direction change of the camera **10**, light, and the like.

Step S**701** to step S**703** are similar processes to step S**601** to step S**603**. Therefore, descriptions thereof are omitted.

In step S**704**, the scene change detection unit **51** detects the change in the video image captured by the camera **10**. In a case where the change in the video image captured by the camera **10** is detected (Yes in step S**704**), the process is forwarded to step S**705**. On the other hand in a case where the change in the video image captured by the camera **10** is not detected, the process returns to step S**704** to check the change in the video image again. The process of step S**704** may be repeated at predetermined intervals.

In step S**705**, the DPTZ control unit **50** reports the encoder **16** that the frame of video image transmitted to the encoder **16** is to be encoded as the second video image frame.

In step S**706**, the DPTZ control unit **50** generates N frames of the same video image frames including the frame at which the change of the video image has been detected. The displayed video image becomes still image during the N frames since the same video image frames are generated. The number "N" may be set taking into account the bandwidth of network path between the video image processing apparatus **1** and the video image processing apparatus **1** of the communication counterpart.

Additionally, in parallel with the process of step S**706**, the video image processing apparatus **1** may adjust the capture mode of the camera **10** such as a photometry condition, etc., according to environment after the video image has been changed.

In the operation process described above, the second video image frame may increase by **1**, which may cause to use the bandwidth of the network exceeding a predetermined amount temporarily. However, the degradation of the transmission efficiency can be suppressed because the N same video image frames are generated. Even if the bandwidth used by transmitting the video image frames to the video image processing apparatus **1** of the communication counterpart exceeds the predetermined amount, a circuit termination during the TV conference due to the use of excessive bandwidth can be avoided as long as the overuse is temporal.

Additionally, the operation process described above can be applied to monitoring purpose. In a case where the operation process is applied to the monitoring purpose, the range of video image to be used changes in response to detecting the appearance of a person in addition to detecting a human voice.

<Other>

Although, in the embodiments described above, the video image processing apparatus **1** is used, for example, to provide TV conference and monitoring, the video image processing apparatus **1** may also be used for other purposes. A high transmission efficiency can be maintained by using the video image processing apparatus **1** described above in which encoding operation of the video image frames is improved.

A recording medium storing software program codes for achieving the functions described above may be provided to the video image processing apparatus **1**. The embodiments described above can be also achieved by executing the program codes stored in the recording medium by the video

image processing apparatus **1**. In this case, the program codes retrieved from the recording media themselves achieve the functions of the above described embodiments, and the recording medium storing the program codes corresponds to any of the embodiments. The recording medium may be a storage or non-temporary storage.

Also, the above described embodiments may not be achieved only by executing the program codes retrieved in a computer apparatus. The operating system (OS) installed in the computer apparatus may perform a part of or all of actual processes in accordance with instructions of the program codes. Further, the functions of above described embodiments may be achieved by the performed processes.

Herein above, although the present disclosure has been described with respect to a specific embodiment for a complete and clear disclosure, the appended claims are not to be thus limited but are to be construed as embodying all modifications and alternative constructions that may occur to one skilled in the art that fairly fall within the basic teaching herein set forth. The present application is based on Japanese Priority Application No. 2015-142504 filed on Jul. 16, 2015, the entire contents of which are hereby incorporated herein by reference.

What is claimed is:

1. A video image processing apparatus comprising:

a generation unit configured to generate a video image frame from an image area to be used included in a video image captured by a camera, a spatial area in the video image being defined by the image area to be used;

an encoding unit configured to encode the video image frame into any one of a first video image frame and a second video image frame, wherein the first video image frame is generated through an encoding operation using inter-frame prediction, and the second video image frame is generated through an encoding operation using intra-frame prediction; and

a detection unit configured to detect a trigger for changing the image area to be used to report the detection of the trigger to the generation unit, wherein the encoding unit reports a encoded video image frame type indicative of any one of the first video image frame and the second video image frame to the generation unit in advance, and in response to receiving the detection of the trigger, the generation unit changes the image area to be used in a video image frame based on the reported encoded video image frame type.

2. The video image processing apparatus according to claim **1**, wherein the generation unit changes the image area to be used in the video image that is encoded into the second video image frame.

3. The video image processing apparatus according to claim **1**, wherein

in response to receiving the detection of the trigger, the generation unit changes the image area to be used, and transmits a report indicating the change of the image area to be used to the encoding unit; and

in response to receiving the change of the image area to be used, the encoding unit encodes the video image frame, in which the image area to be used has been changed, into the second video image frame.

4. The video image processing apparatus according to claim **3**, wherein the generation unit generates a predetermined number of video image frames subsequent to the video image frame in which the image area to be used has been changed, and wherein the same video image as the video image of the video image frame, in which the image area to be used has been changed, is used as video images for the predetermined number of video image frames.

5. The video image processing apparatus according to claim **1**, wherein the trigger is an occurrence of sound.

6. The video image processing apparatus according to claim **1**, wherein the trigger is an appearance of a person.

7. A non-transitory computer-readable recording medium having stored therein a program for causing a computer to perform a method comprising:

generating video image frame from an image area to be used included in a video image captured by a camera, a spatial area in the video image being defined by the image area to be used;

encoding the video image frame into any one of a first video image frame and a second video image frame, wherein the first video image frame is generated through an encoding operation using inter-frame prediction, and the second video image frame is generated through an encoding operation using intra-frame prediction, and wherein a encoded video image frame type indicative of any one of the first video image frame and the second video image frame is reported advance;

detecting a trigger for changing the image area to be used to report the detection of the trigger;

changing the image area to be used in a video image frame based on the reported encoded video image frame type in response to receiving the detection of the trigger.

* * * * *