US009169977B2

(12) **United States Patent**
Medendorp, Jr. et al.

(10) **Patent No.: US 9,169,977 B2**
(45) **Date of Patent: Oct. 27, 2015**

(54) **LED LAMP**

(71) Applicant: **Cree, Inc.**, Durham, NC (US)

(72) Inventors: **Nicholas William Medendorp, Jr.**, Raleigh, NC (US); **Randall Levy Bernard**, Cary, NC (US); **James Michael Lay**, Apex, NC (US); **Nathan Ray Snell**, Raleigh, NC (US); **Paul Kenneth Pickard**, Morrisville, NC (US)

(73) Assignee: **Cree, Inc.**, Durham, NC (US)

(*) Notice: Subject to any disclaimer, the term of this patent is extended or adjusted under 35 U.S.C. 154(b) by 0 days.

(21) Appl. No.: **14/265,823**

(22) Filed: **Apr. 30, 2014**

(65) **Prior Publication Data**

US 2015/0003070 A1 Jan. 1, 2015

Related U.S. Application Data

(63) Continuation-in-part of application No. 13/943,152, filed on Jul. 16, 2013.

(60) Provisional application No. 61/840,652, filed on Jun. 28, 2013.

(51) **Int. Cl.**

F21K 99/00	(2010.01)
F21V 3/02	(2006.01)
F21V 7/00	(2006.01)
F21Y 101/02	(2006.01)
F21Y 103/00	(2006.01)
F21Y 113/00	(2006.01)

(52) **U.S. Cl.**

CPC . ***F21K 9/17*** (2013.01); ***F21K 9/175*** (2013.01); ***F21V 3/02*** (2013.01); *F21K 9/50* (2013.01); *F21V 7/0016* (2013.01); *F21Y 2101/02* (2013.01); *F21Y 2103/003* (2013.01); *F21Y 2113/00* (2013.01)

(58) **Field of Classification Search**

USPC 362/249.02, 311.02, 647, 649, 651, 254

See application file for complete search history.

(56) **References Cited**

U.S. PATENT DOCUMENTS

5,688,042	A	11/1997	Madadi et al.
6,853,151	B2	2/2005	Leong et al.
6,860,628	B2	3/2005	Robertson et al.
6,936,968	B2	8/2005	Cross et al.

(Continued)

FOREIGN PATENT DOCUMENTS

JP	H08162677	A	6/1996
JP	2007059930	A	3/2007

(Continued)

OTHER PUBLICATIONS

U.S. Appl. No. 13/772,436, filed Feb. 21, 2013.

(Continued)

Primary Examiner — Laura Tso

(74) *Attorney, Agent, or Firm* — Dennis J. Williamson; Moore and Van Allen PLLC

(57) **ABSTRACT**

A LED lamp has an enclosure including an optically transmissive lens. LEDs are mounted on a plane in the enclosure and are operable to emit light through the lens when energized through an electrical path. A portion of the lens extends behind the plane of the plurality of LEDs such that a portion of the light is emitted as back light. Approximately between 5 and 25 percent of the total Lumen output of the lamp is emitted as backlight.

21 Claims, 20 Drawing Sheets

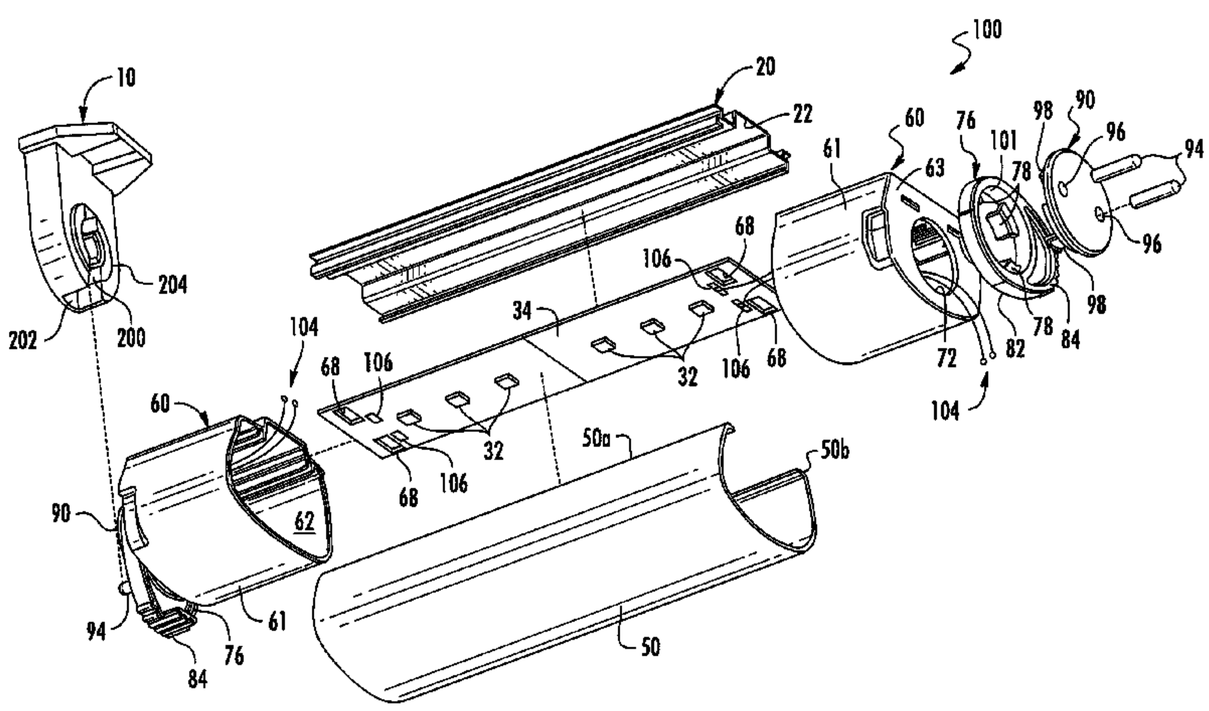

(56) **References Cited**

U.S. PATENT DOCUMENTS

7,048,410	B2	5/2006	Kutler
7,049,761	B2	5/2006	Timmermans et al.
7,114,830	B2	10/2006	Robertson et al.
7,307,391	B2	12/2007	Shan
7,510,299	B2	3/2009	Timmermans et al.
7,815,338	B2	10/2010	Siemiet et al.
7,926,975	B2	4/2011	Siemiet et al.
7,976,196	B2	7/2011	Ivey et al.
8,058,659	B2	11/2011	Bisberg
8,093,823	B1	1/2012	Ivey et al.
8,115,411	B2	2/2012	Shan
8,118,447	B2	2/2012	Simon et al.
8,214,084	B2	7/2012	Ivey et al.
8,247,985	B2	8/2012	Timmermans et al.
8,282,247	B2	10/2012	Ivey et al.
8,324,817	B2	12/2012	Ivey et al.
8,360,599	B2	1/2013	Ivey et al.
8,362,710	B2	1/2013	Langovsky
8,382,327	B2	2/2013	Timmermans et al.
8,419,223	B2	4/2013	Withers
8,421,366	B2	4/2013	Palazzolo et al.
8,449,137	B2	5/2013	Dassanayake et al.
8,482,212	B1	7/2013	Ivey et al.
8,573,813	B2	11/2013	Ivey et al.
8,596,813	B2	12/2013	Ivey
2002/0060526	A1	5/2002	Timmermans et al.
2010/0067230	A1 *	3/2010	Uang et al. 362/249.02
2010/0124054	A1 *	5/2010	Chen et al. 362/221
2012/0051038	A1 *	3/2012	Yue et al. 362/218
2012/0300409	A1 *	11/2012	Lee 361/721

FOREIGN PATENT DOCUMENTS

JP	2008288183	A	11/2008
JP	2009117346	A	5/2009
JP	3153766	U	9/2009
JP	2009277586	A	11/2009
WO	2010099755	A1	9/2010

OTHER PUBLICATIONS

U.S. Appl. No. 13/943,043, filed Jul. 16, 2013.
U.S. Appl. No. 13/943,376, filed Jul. 16, 2013.
U.S. Appl. No. 13/943,455, filed Jul. 16, 2013.
U.S. Appl. No. 29/467,949, filed Sep. 25, 2013.
U.S. Appl. No. 13/943,152, filed Jul. 16, 2013.

* cited by examiner

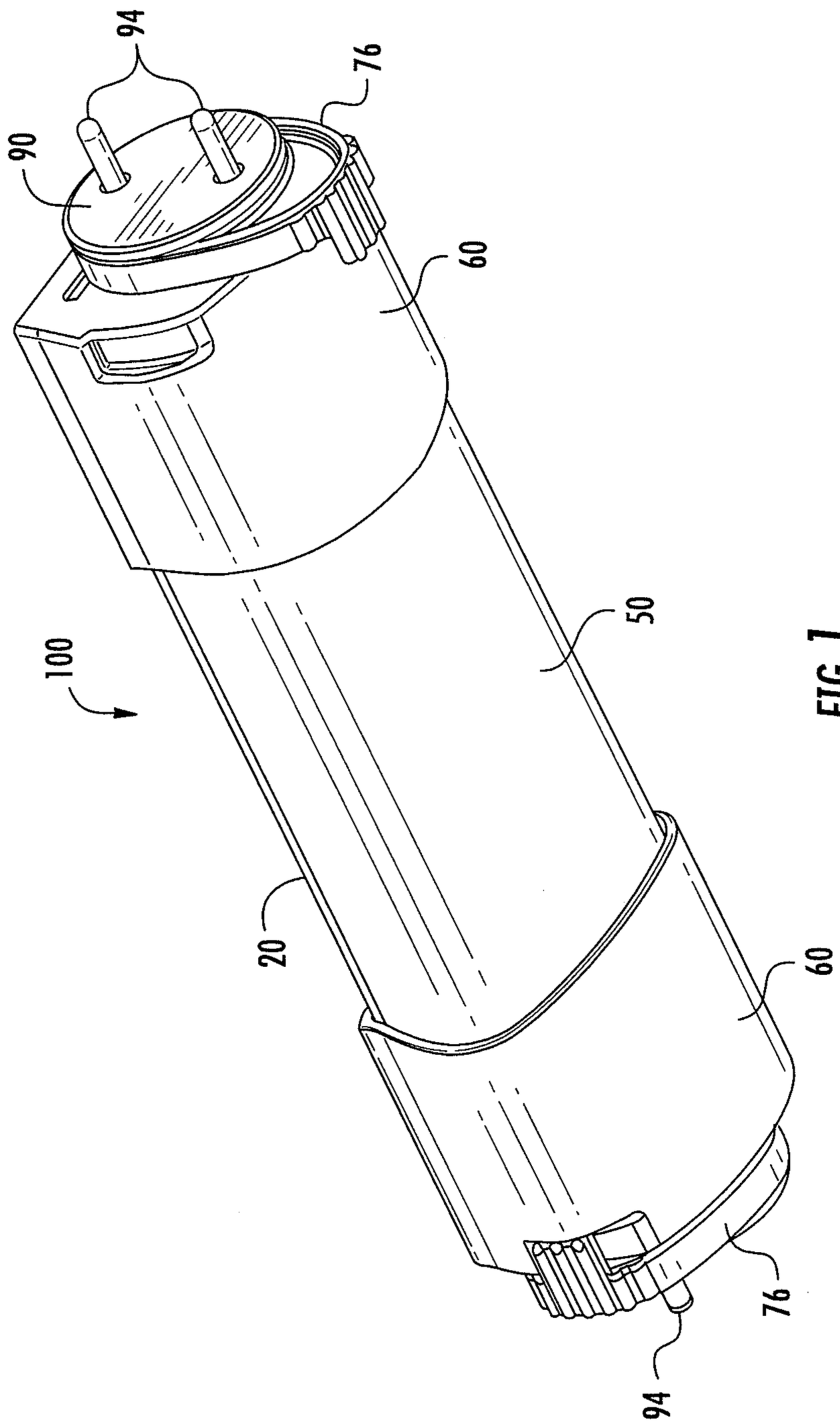

FIG. 1

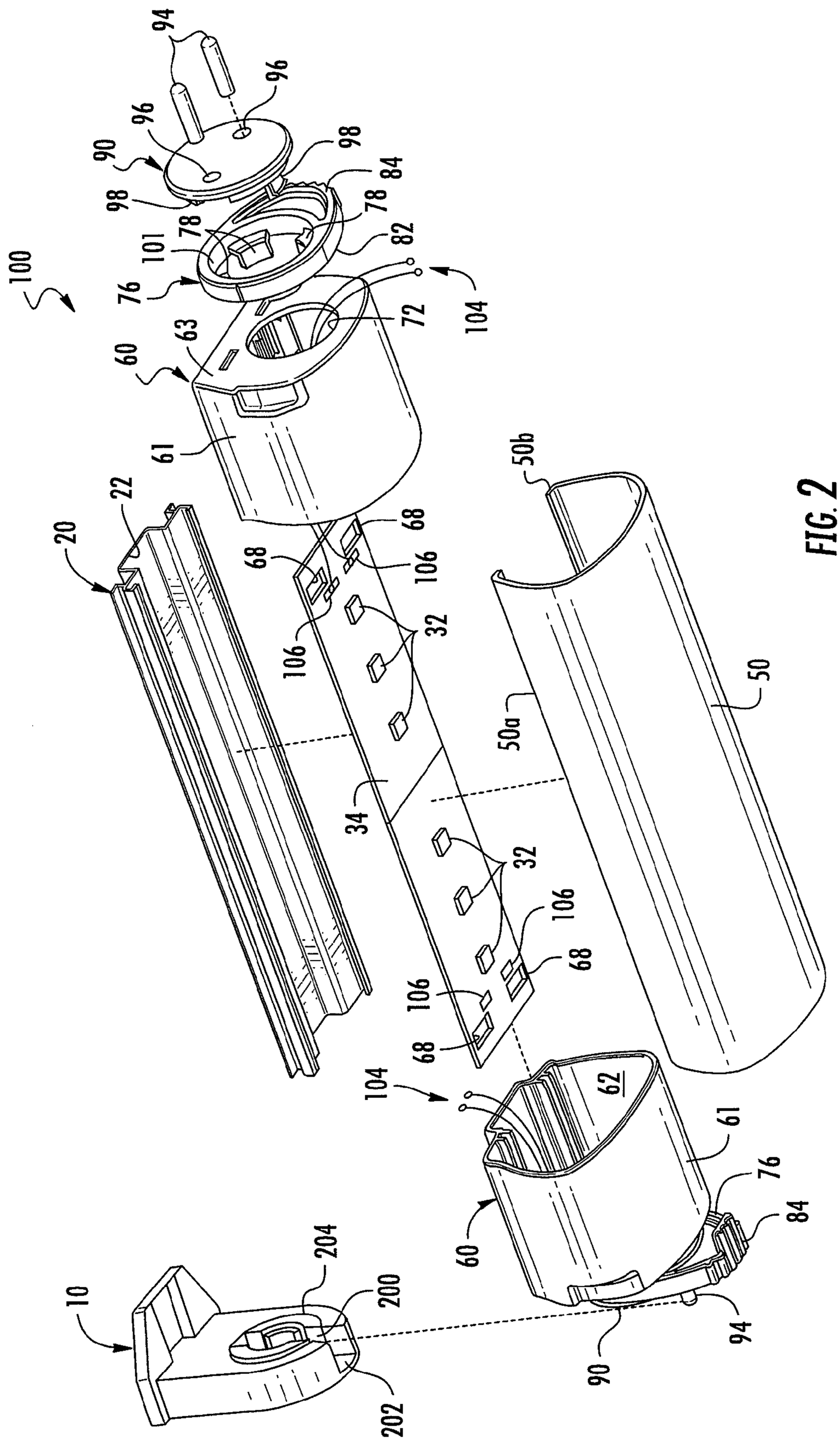
100
94
96
96
90
98
98
84
78
78
101
82
76
104
72
63
60
61
22
20
68
68
106
106
32
50b
50
50a
34
32
106
68
106
68
104
62
61
76
84
60
94
90
10
204
200
202

FIG. 2

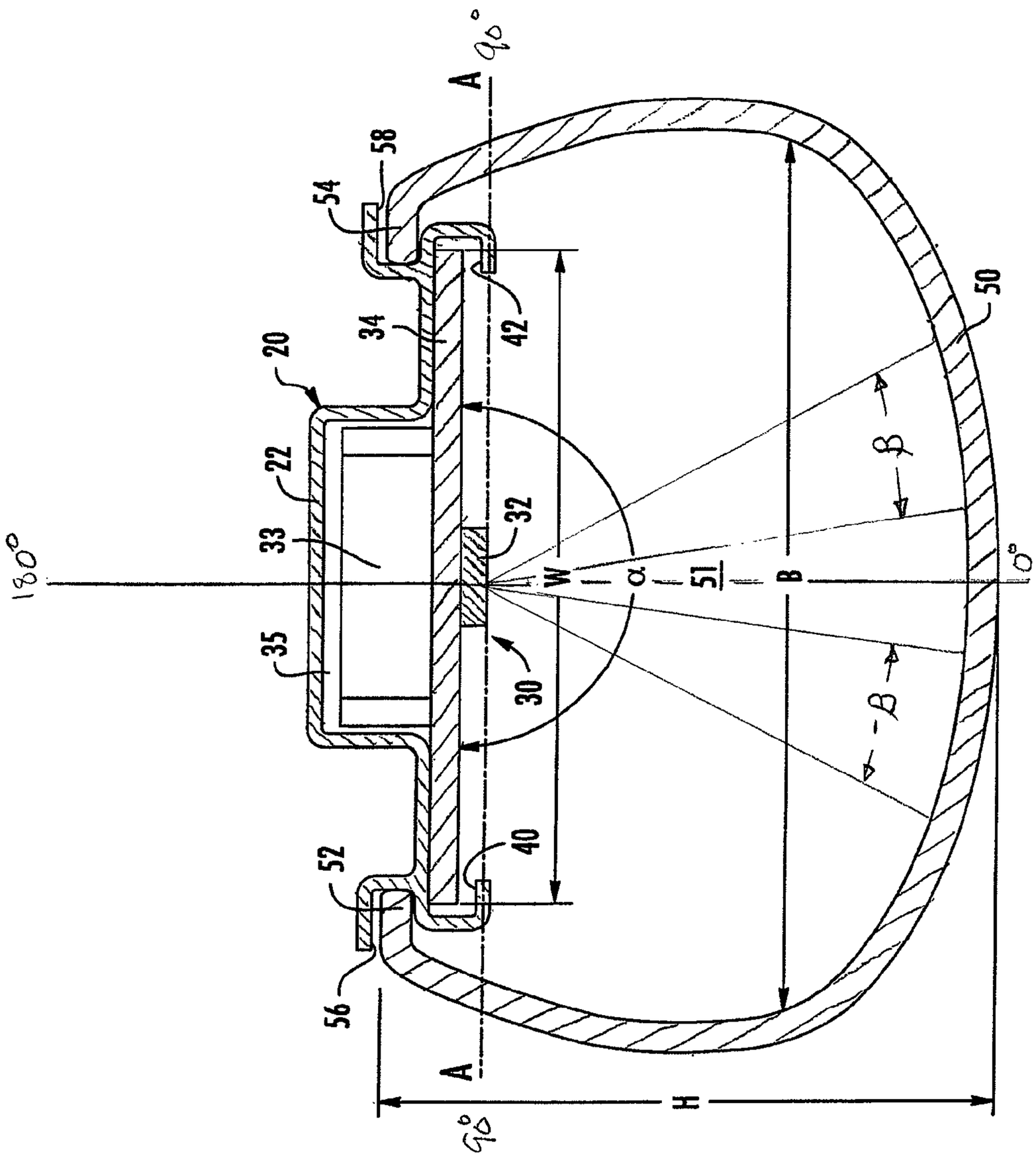

FIG. 3

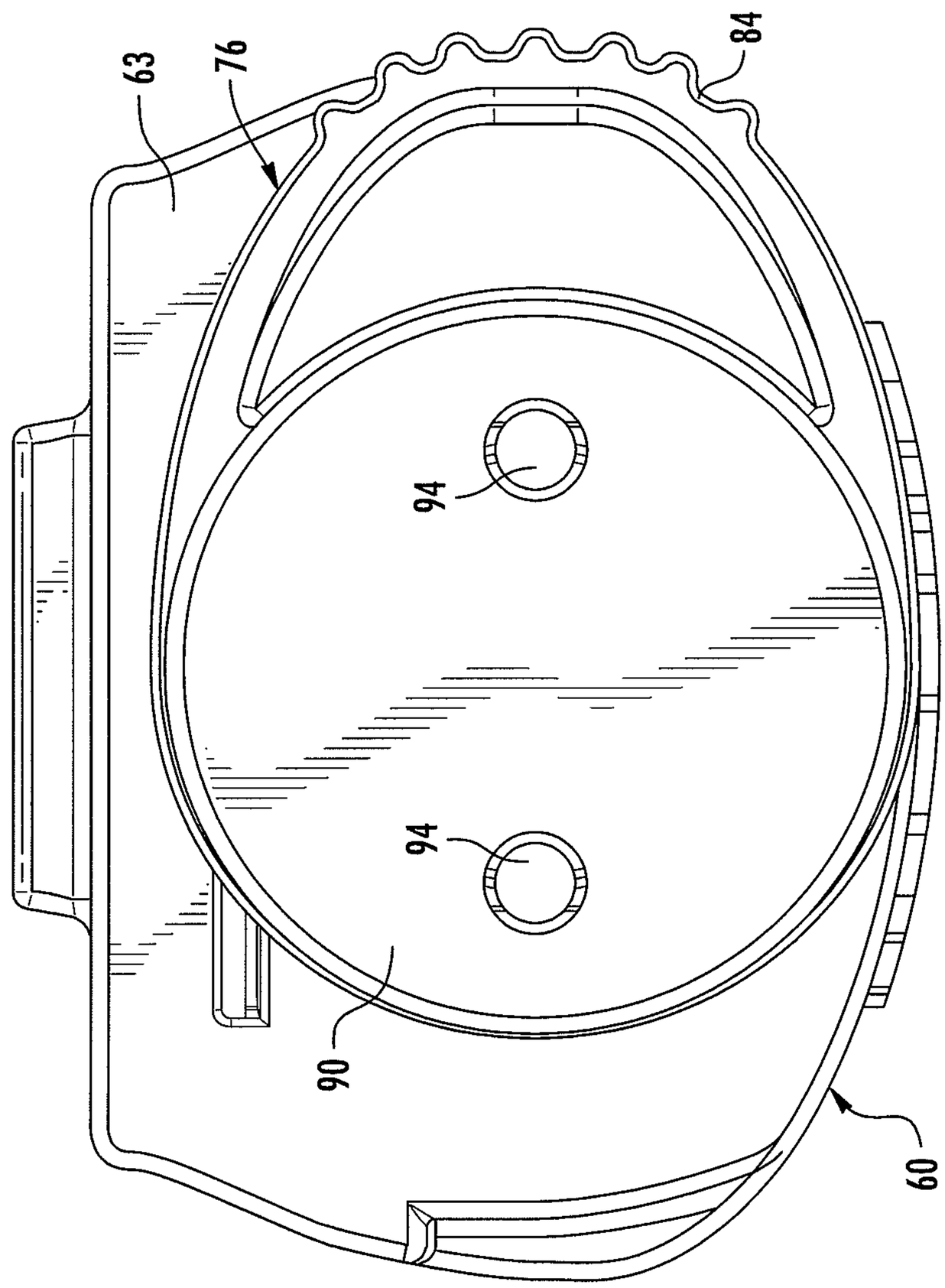

FIG. 4

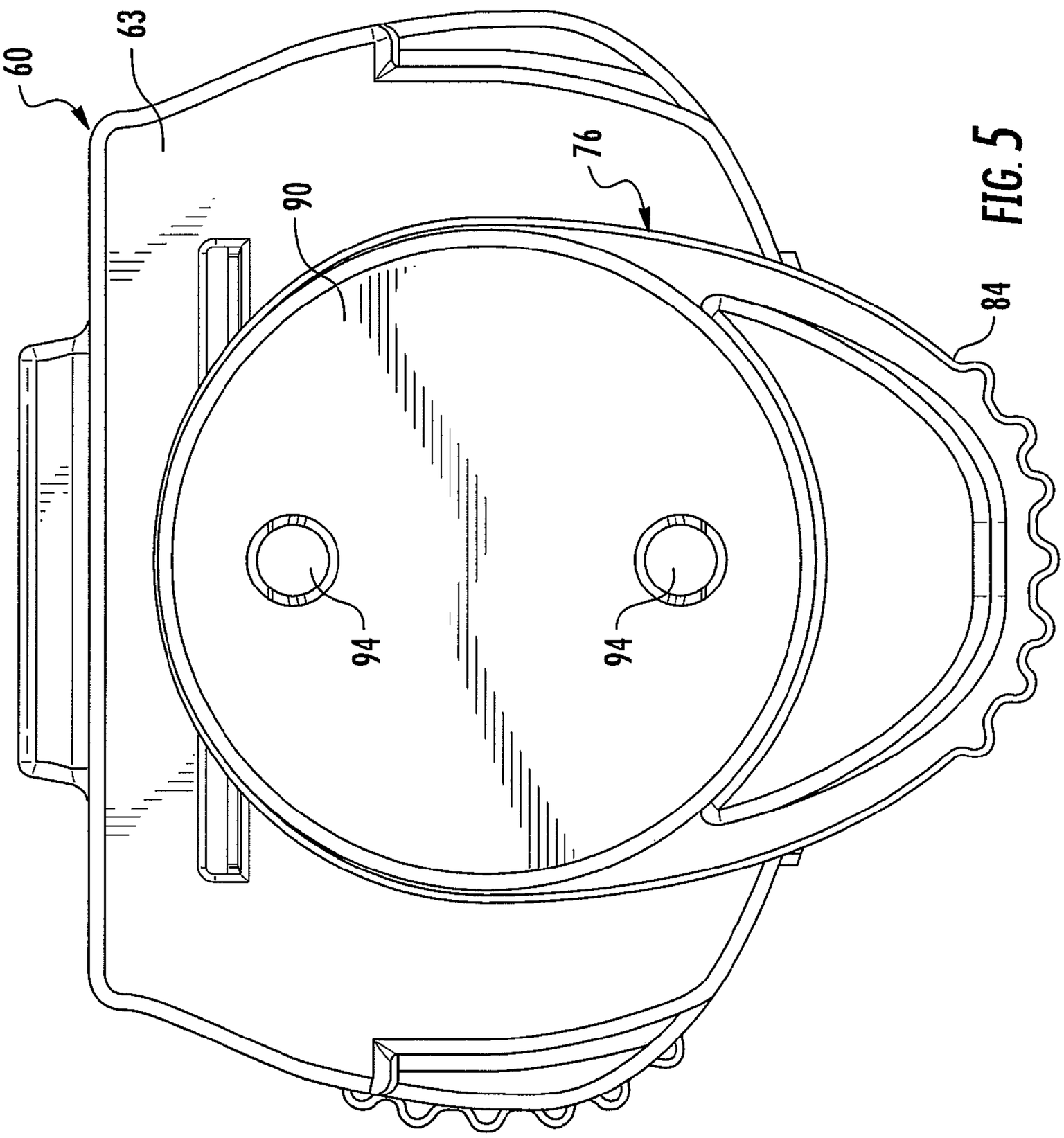

FIG. 5

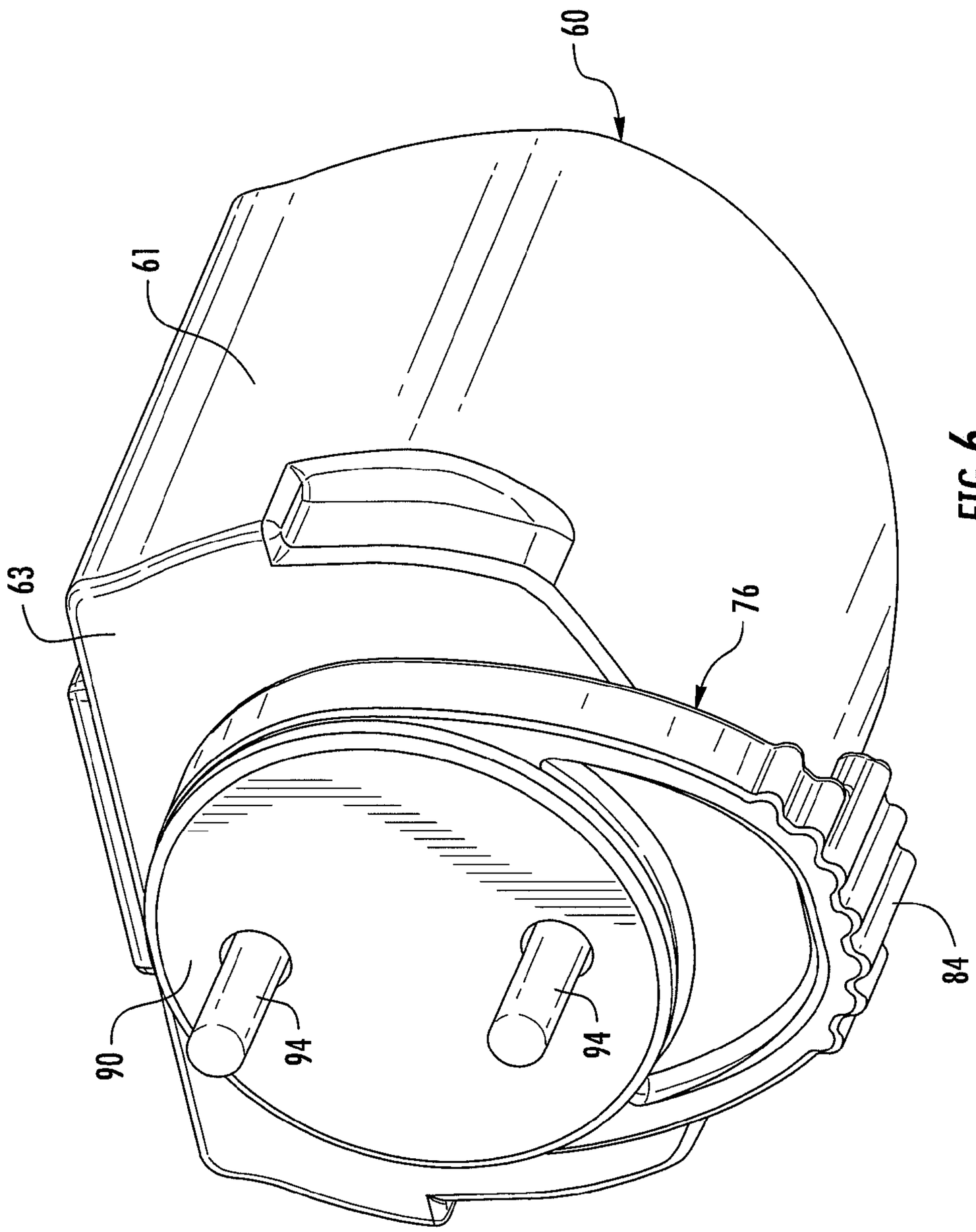

FIG. 6

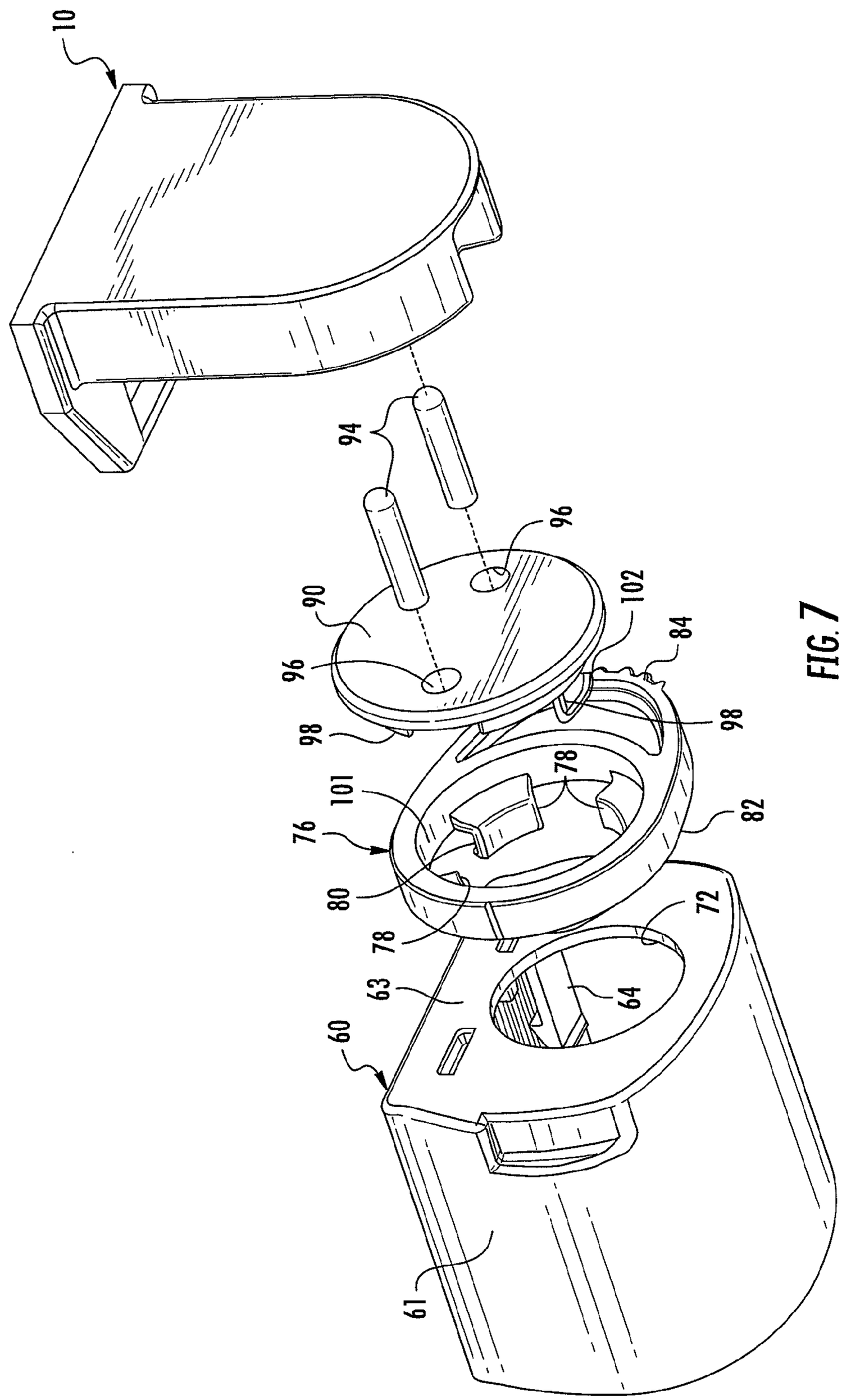

FIG. 7

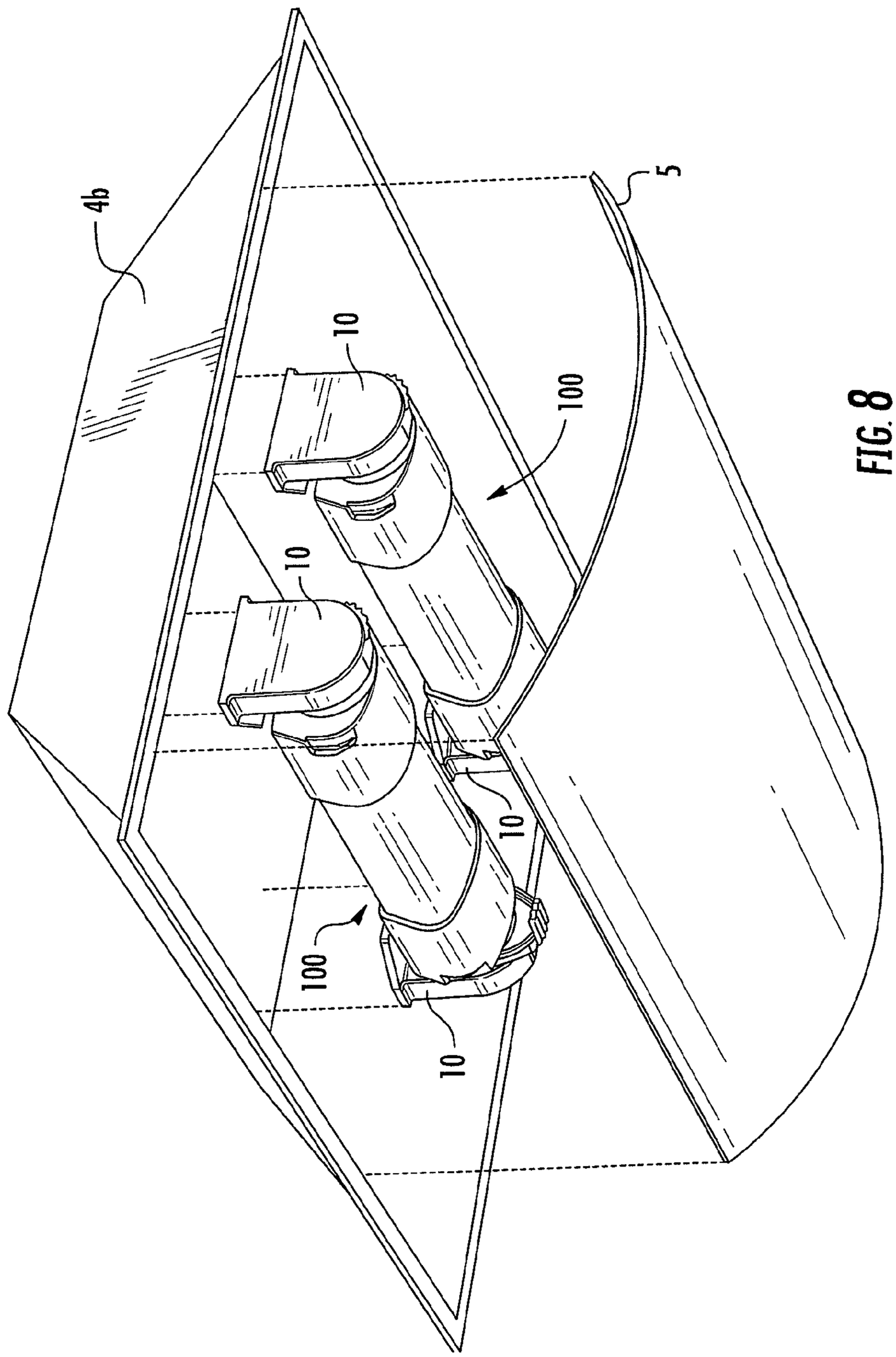

FIG. 8

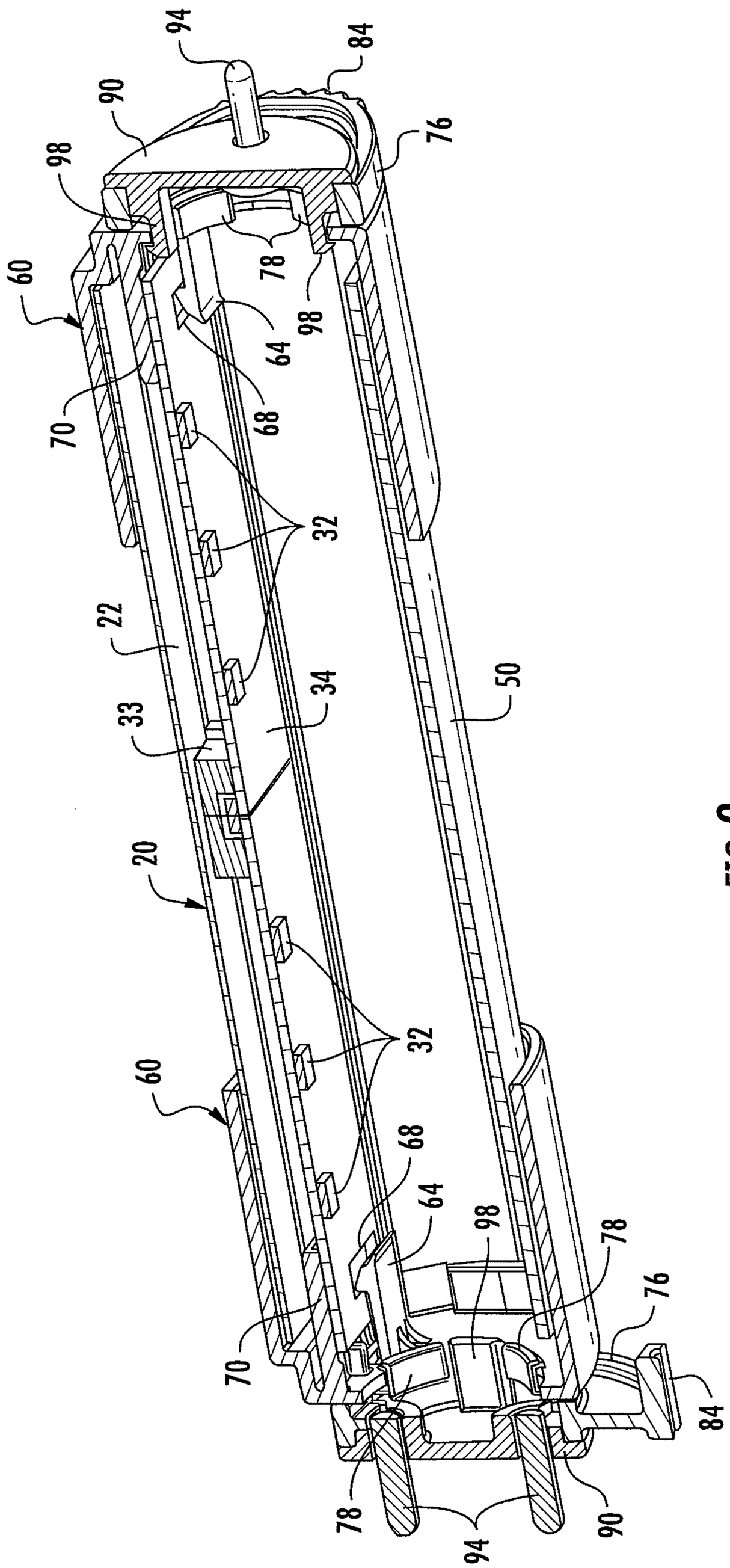
94
84
90
76
98
60
78
98
64
70
68
32
22
34
50
33
20
32
60
68
64
98
78
76
70
84
78
94
90

FIG. 9

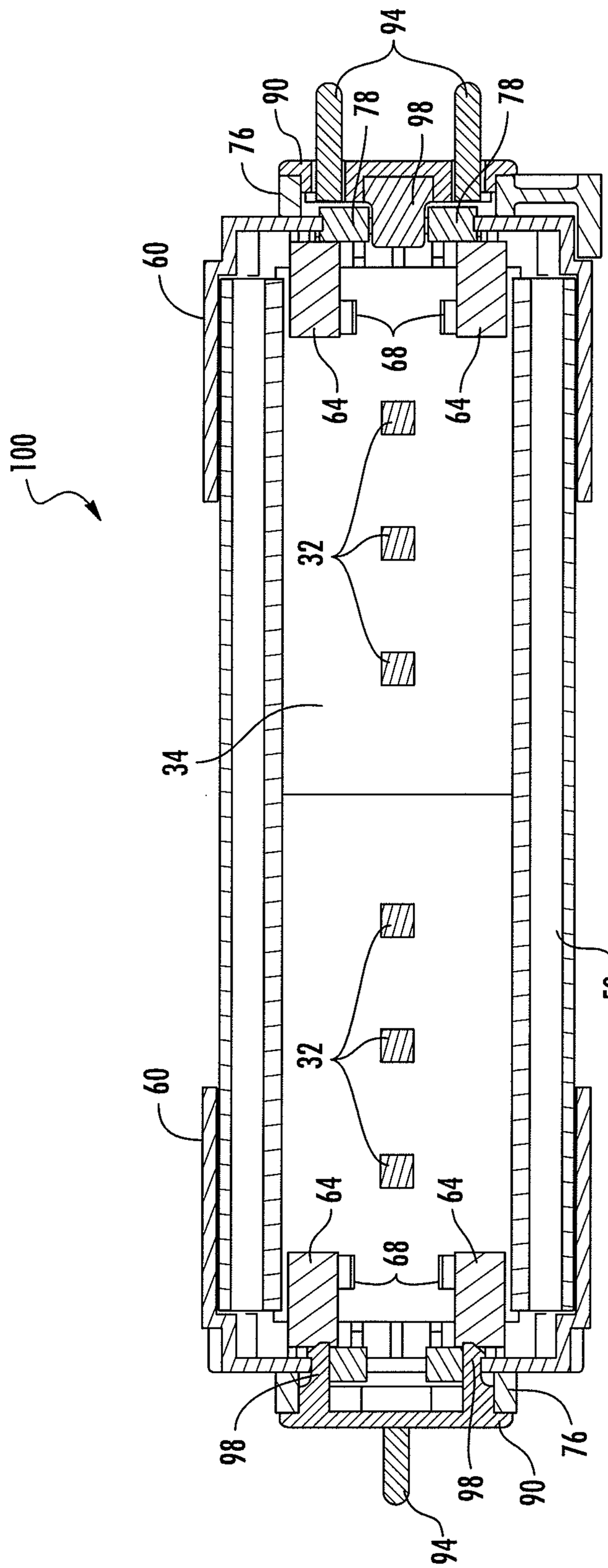

FIG. 10

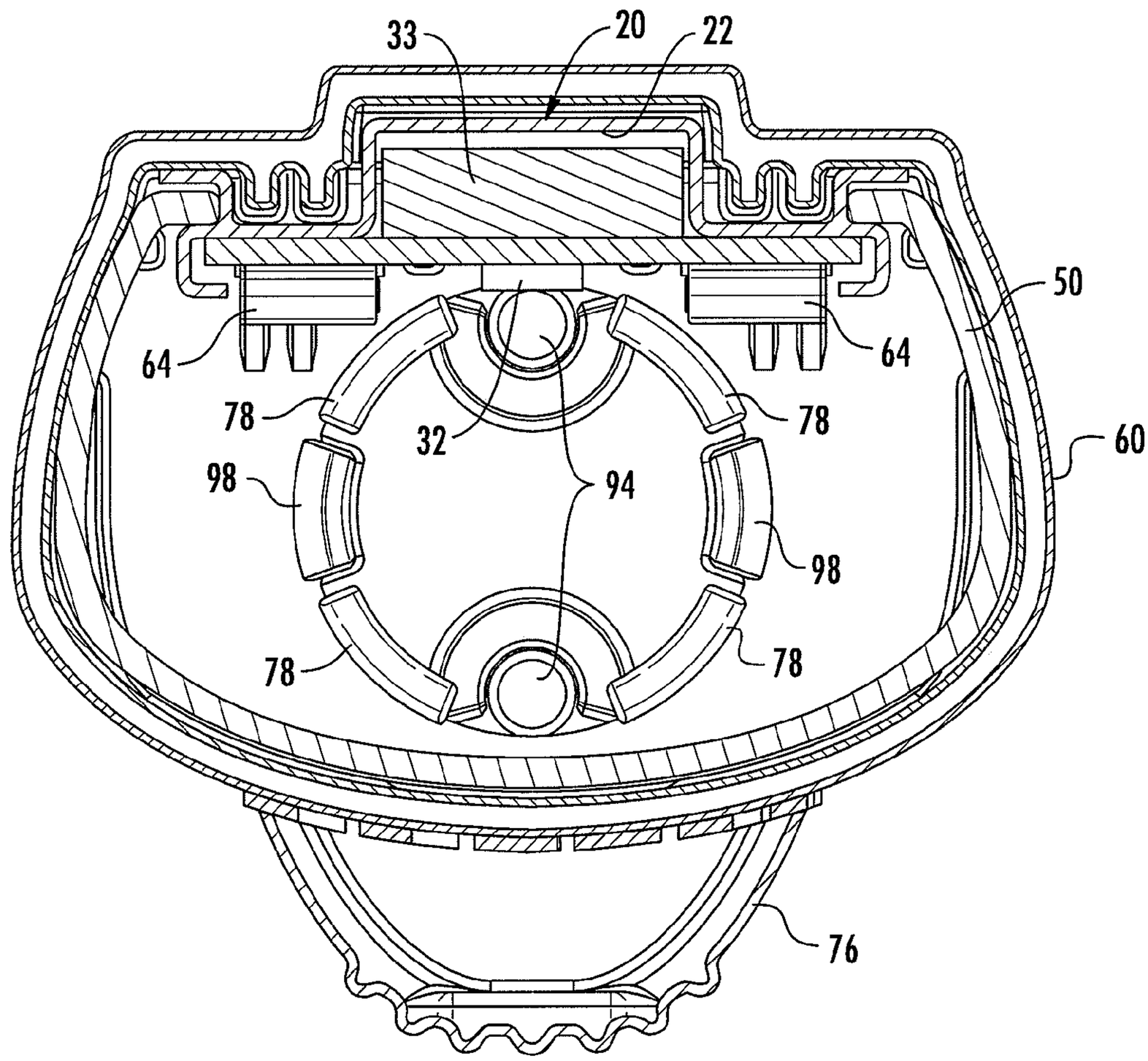

FIG. 11

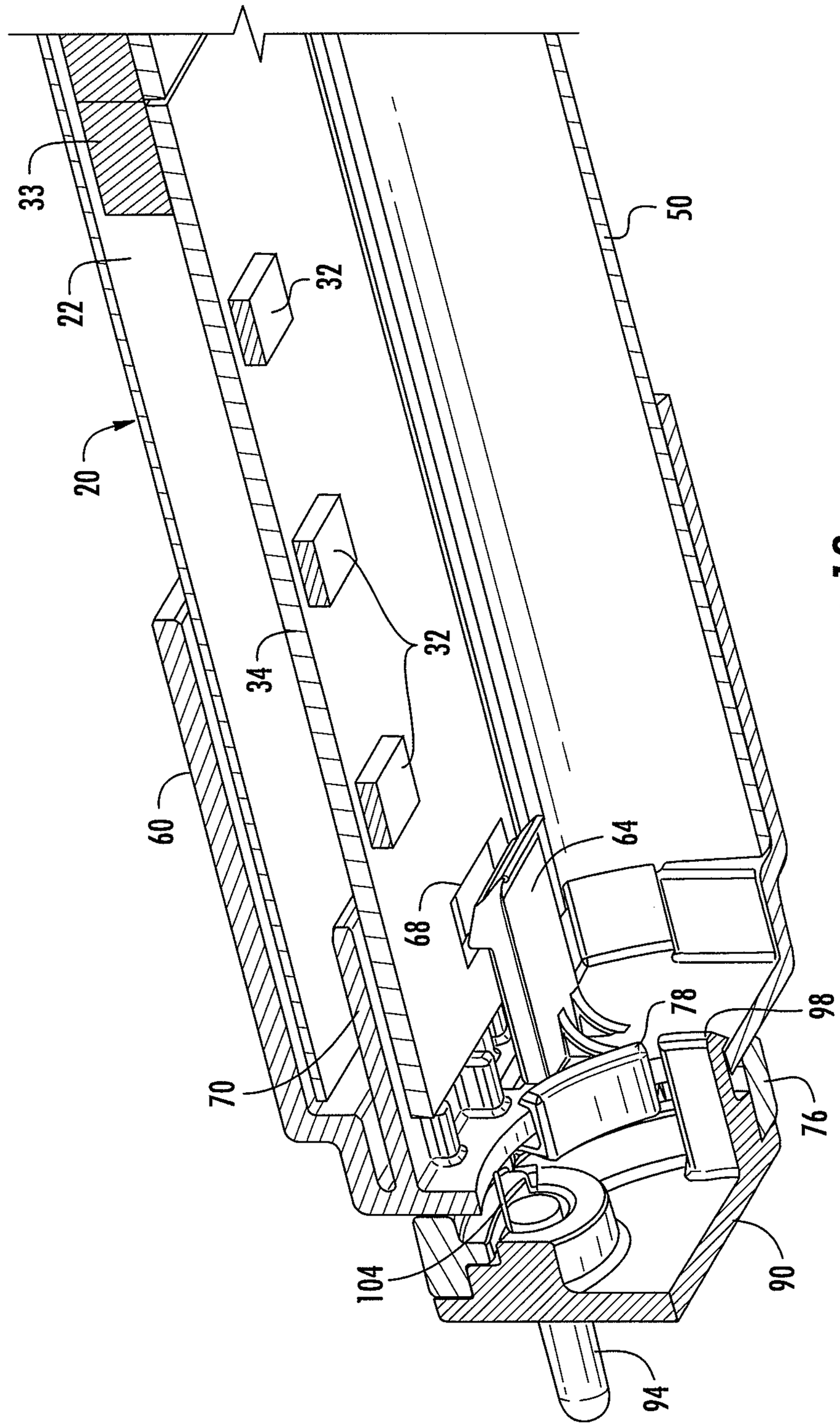

FIG. 12

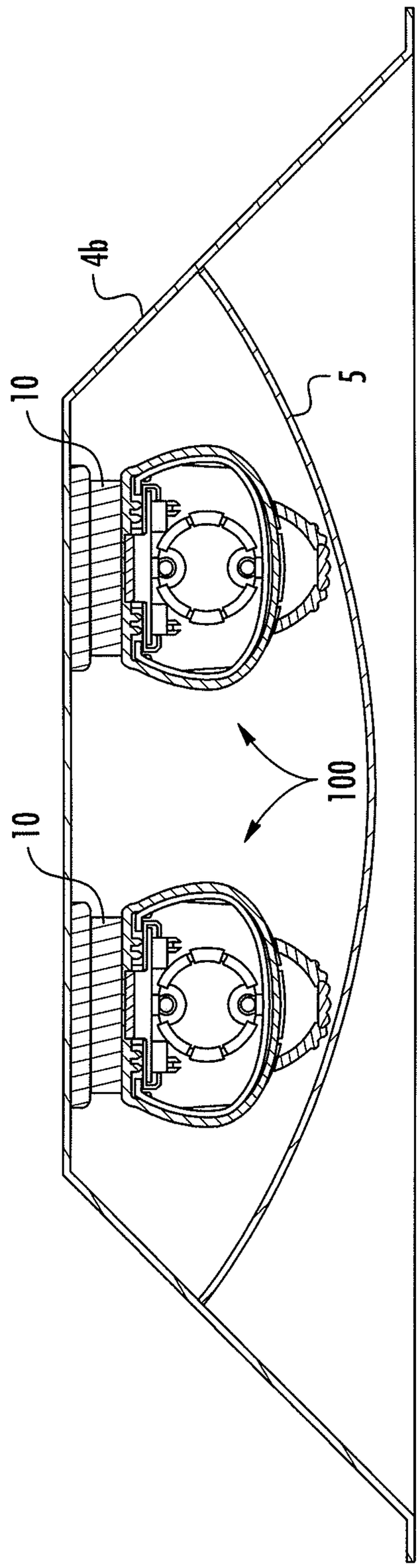

FIG. 13

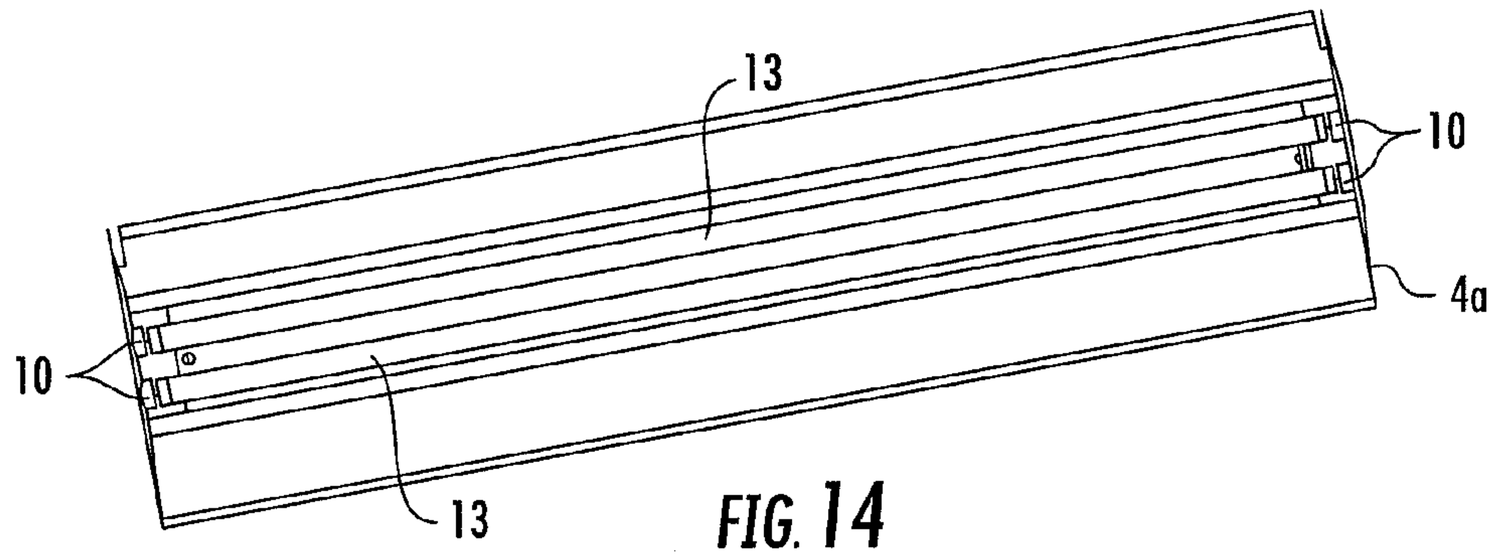

FIG. 14

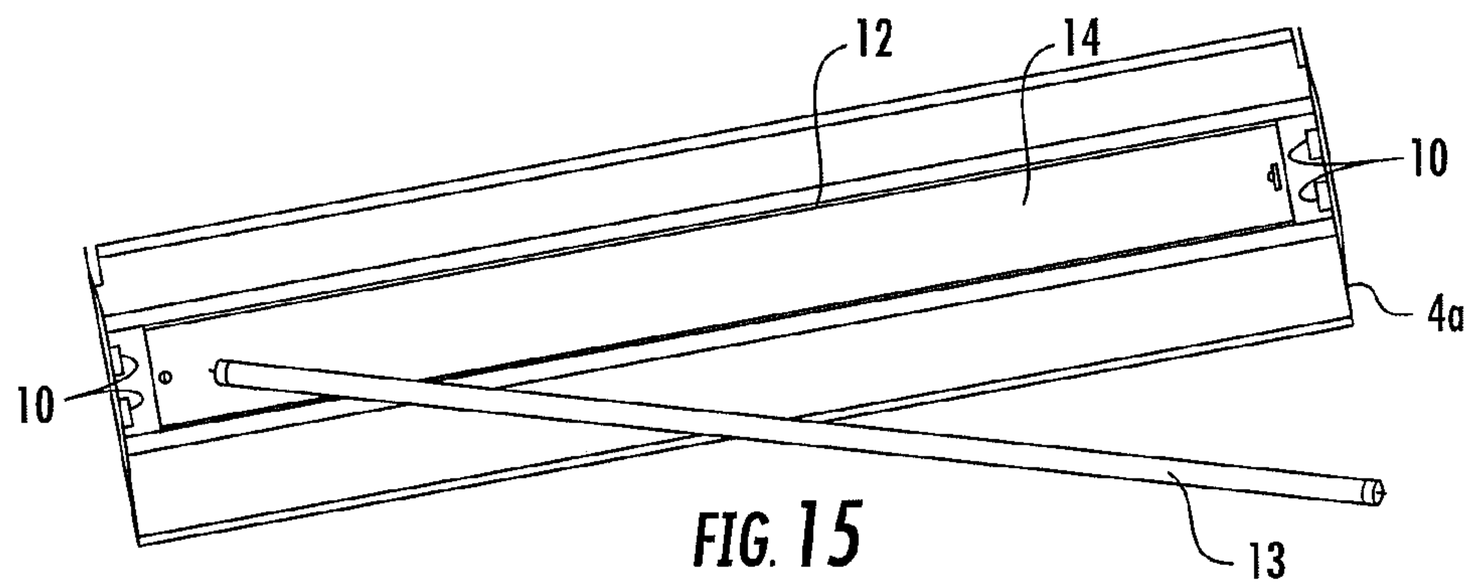

FIG. 15

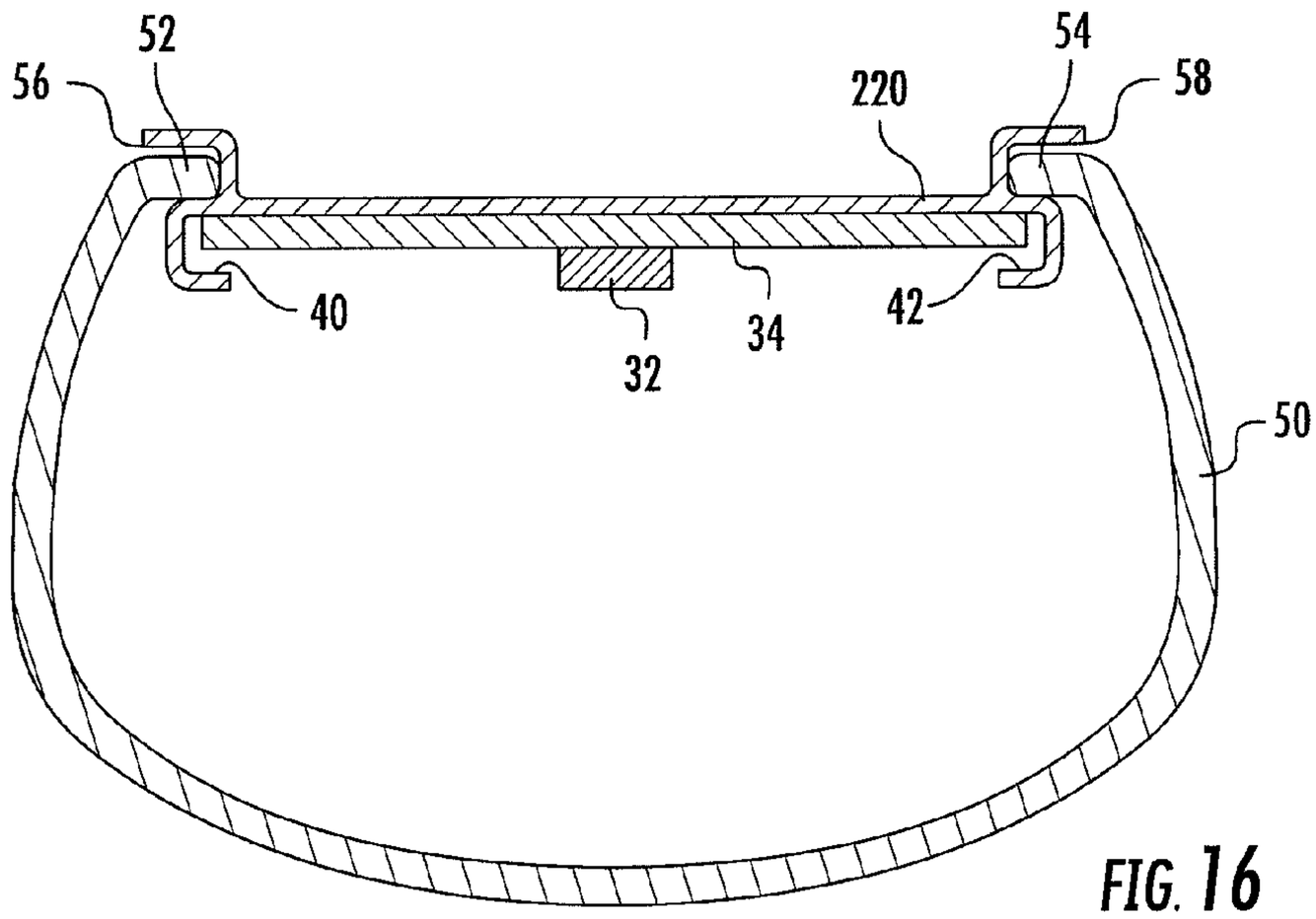
52
56
220
54
58
40
32
34
42
50

FIG. 16

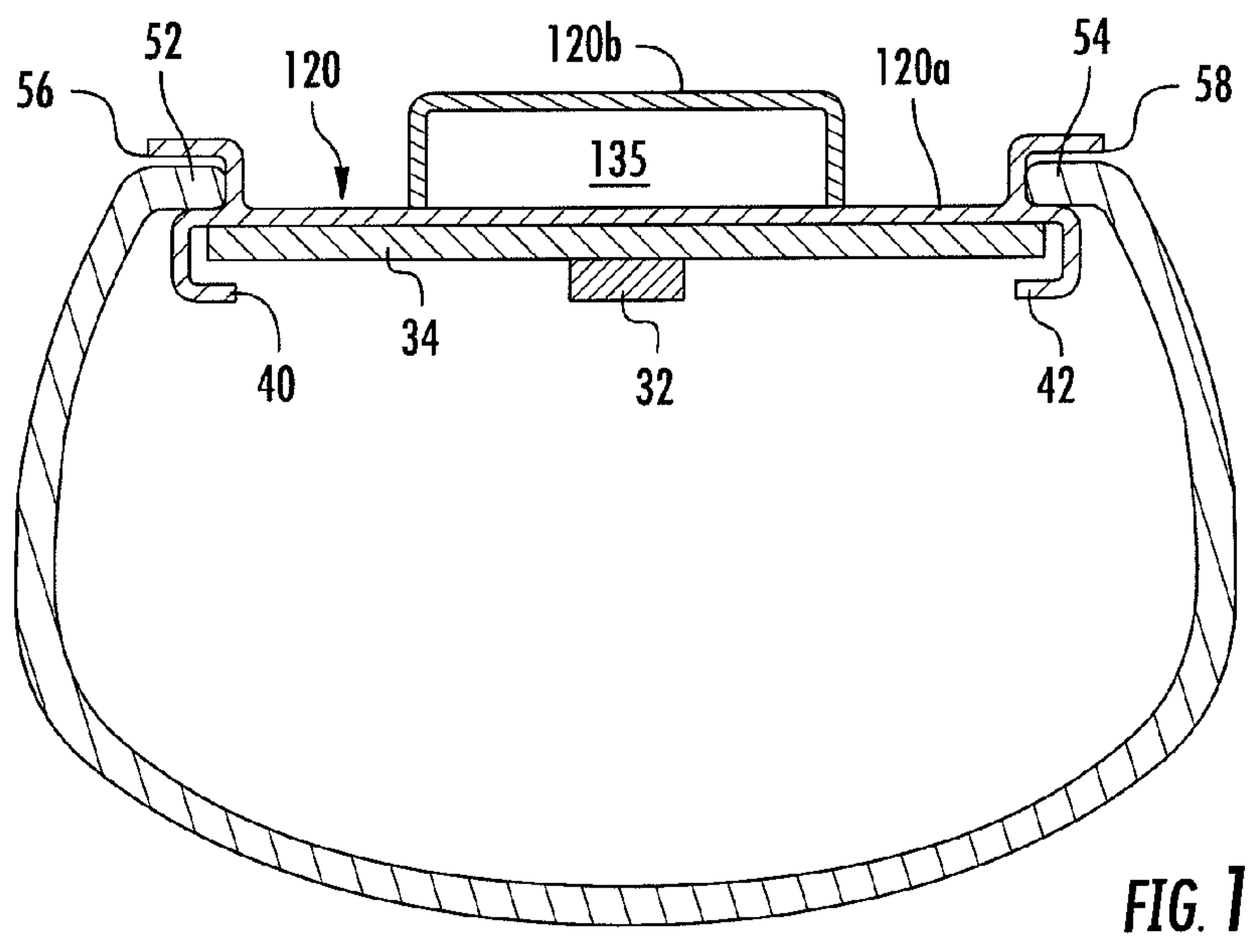
52
120
120b
120a
54
56
58
135
34
40
32
42

FIG. 17

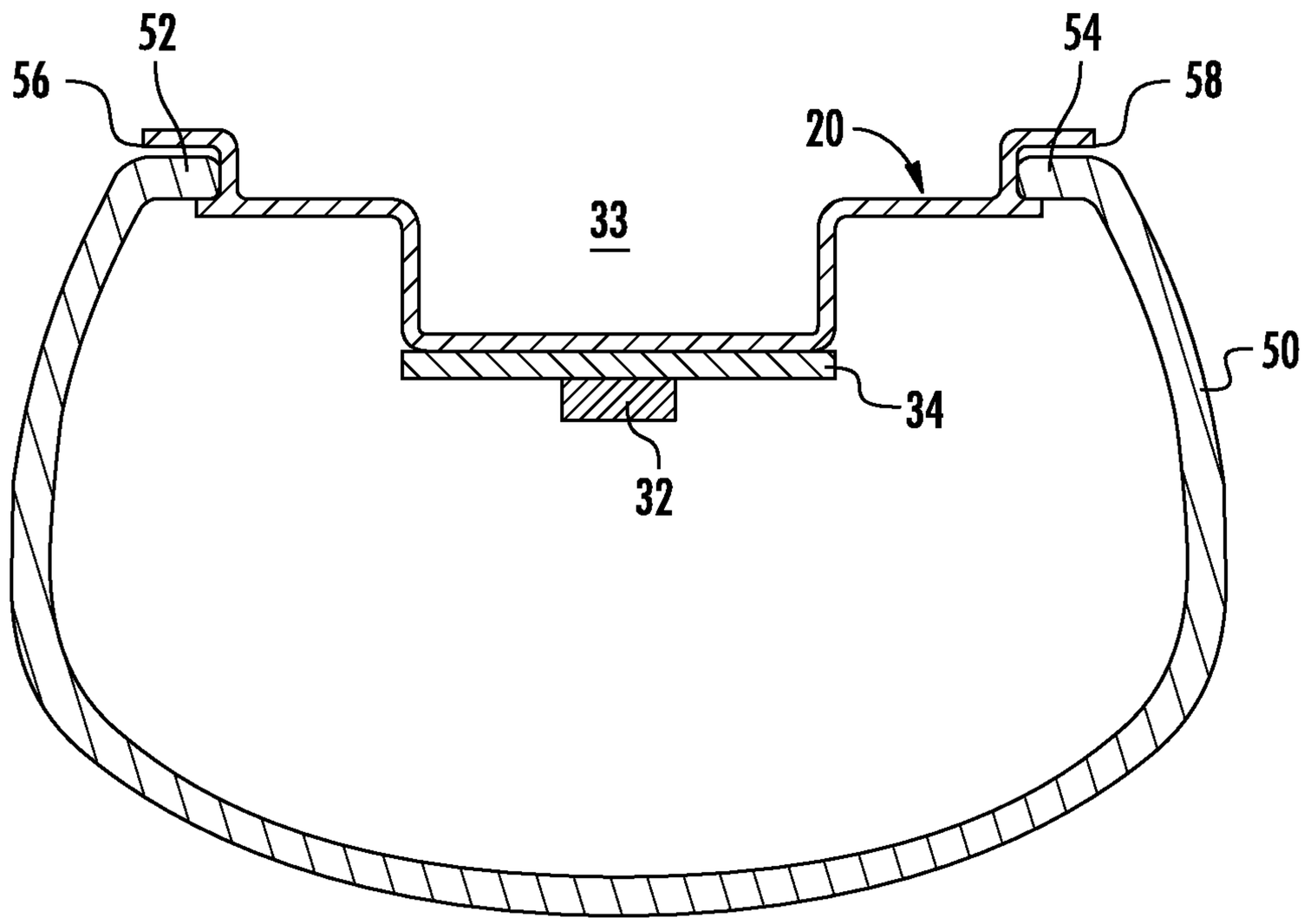

FIG. 18

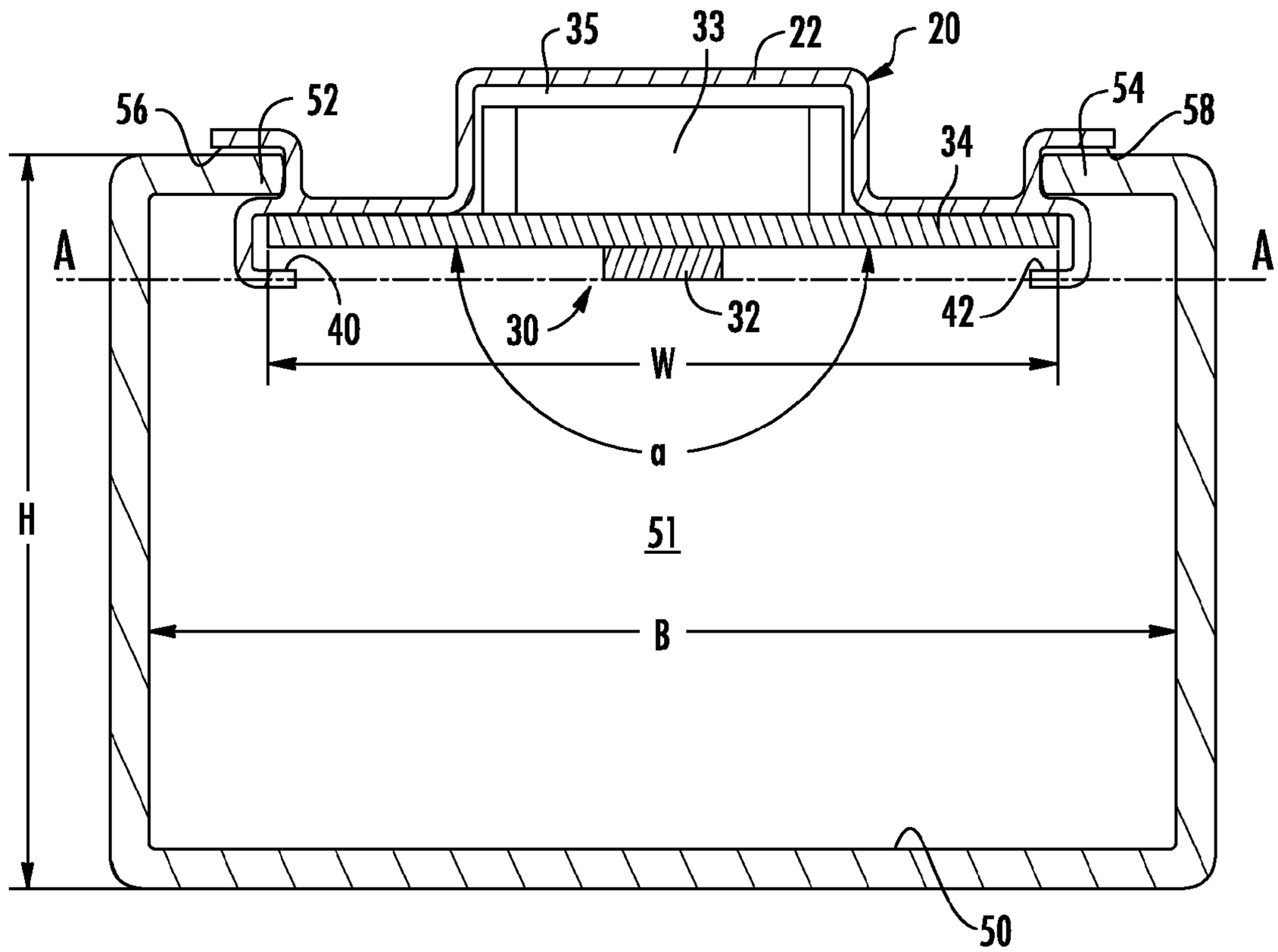

FIG. 19

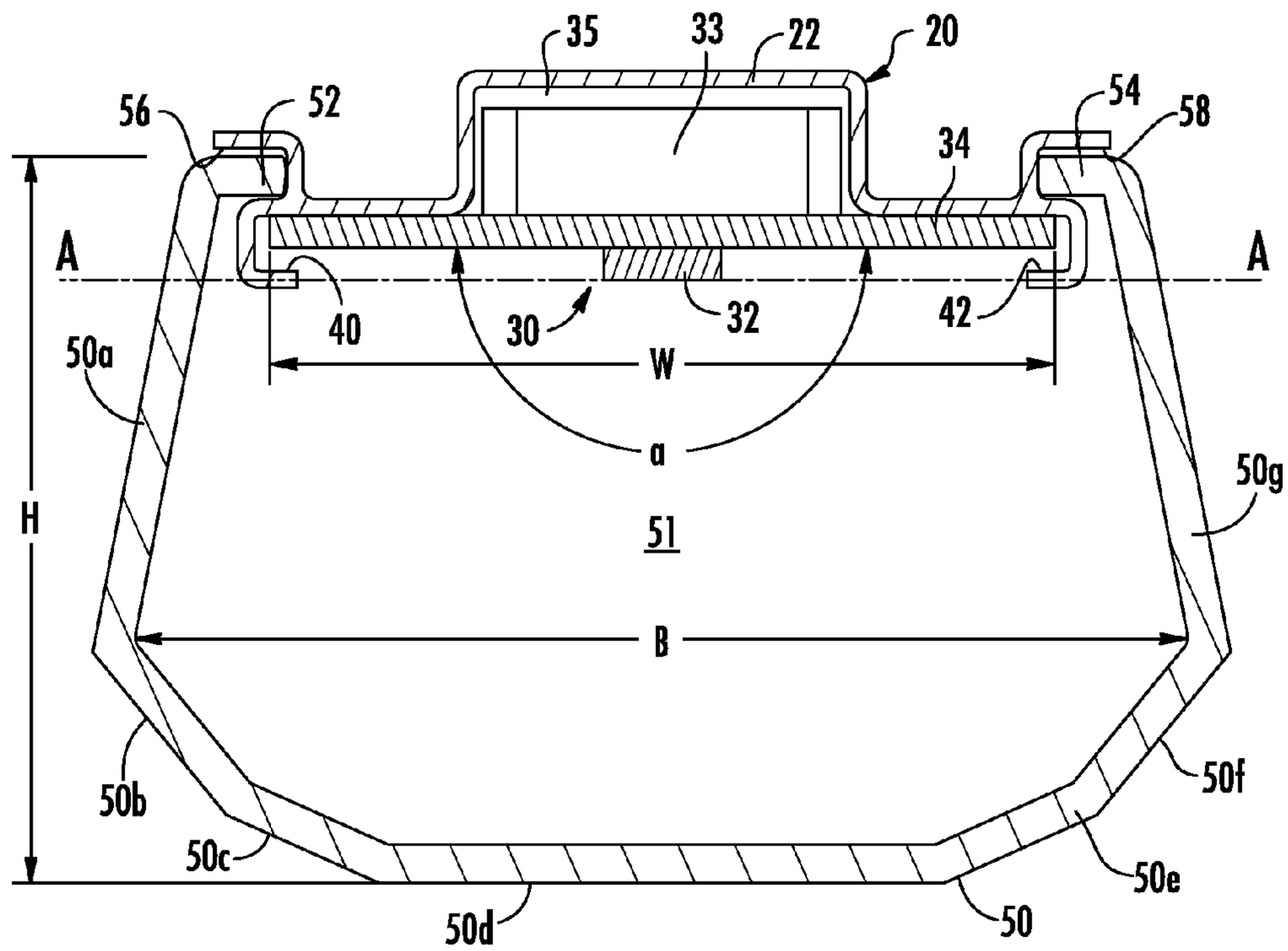
35
33
22
20
56
52
54
58
34
A
A
40
30
32
42
50a
W
a
50g
H
51
B
50b
50f
50c
50e
50d
50

FIG. 20

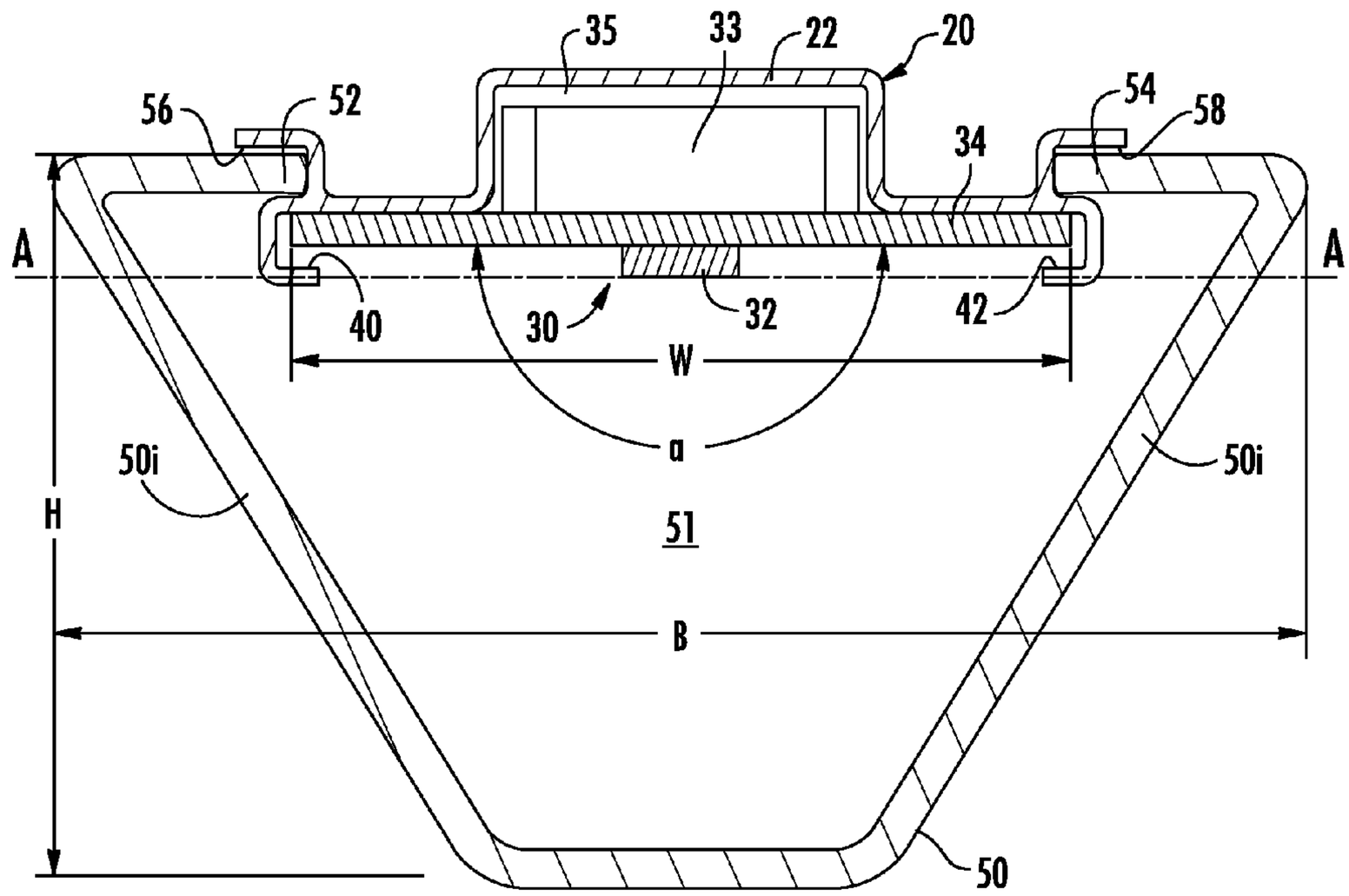

FIG. 21

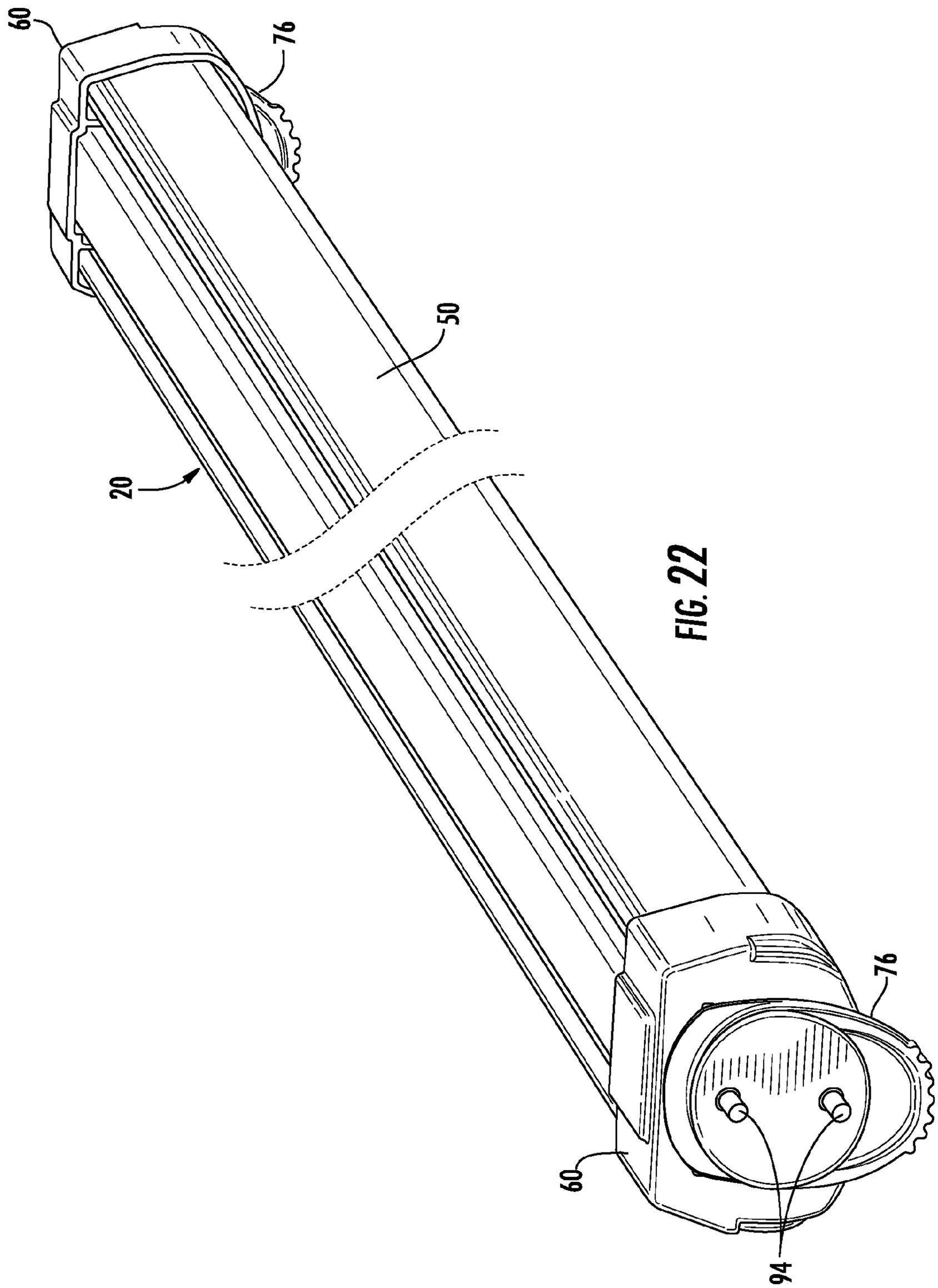

FIG. 22

LED LAMP

This application is a continuation-in-part of U.S. application Ser. No. 13/943,152, as filed on Jul. 16, 2013, which is incorporated herein by reference in its entirety, which in turn claims benefit of priority under 35 U.S.C. §119(e) to the filing date of U.S. Provisional Application No. 61/840,652, as filed on Jun. 28, 2013, which is incorporated herein by reference in its entirety. This application also claims benefit of priority under 35 U.S.C. §119(e) to the filing date of U.S. Provisional Application No. 61/840,652, as filed on Jun. 28, 2013, which is incorporated herein by reference in its entirety.

BACKGROUND

Light emitting diode (LED) lighting systems are becoming more prevalent as replacements for older lighting systems. LED systems are an example of solid state lighting (SSL) and have advantages over traditional lighting solutions such as incandescent and fluorescent lighting because they use less energy, are more durable, operate longer, can be combined in multi-color arrays that can be controlled to deliver virtually any color light, and generally contain no lead or mercury. A solid-state lighting system may take the form of a lighting unit, light fixture, light bulb, or a "lamp."

An LED lighting system may include, for example, a packaged light emitting device including one or more light emitting diodes (LEDs), which may include inorganic LEDs, which may include semiconductor layers forming p-n junctions and/or organic LEDs (OLEDs), which may include organic light emission layers. Light perceived as white or near-white may be generated by a combination of red, green, and blue ("RGB") LEDs. Output color of such a device may be altered by separately adjusting supply of current to the red, green, and blue LEDs. Another method for generating white or near-white light is by using a lumiphor such as a phosphor. Still another approach for producing white light is to stimulate phosphors or dyes of multiple colors with an LED source. Many other approaches can be taken.

SUMMARY OF THE INVENTION

In some embodiments a lamp comprises an enclosure comprising an optically transmissive lens. A plurality of LEDs are mounted on a plane in the enclosure and are operable to emit light through the lens when energized through an electrical path. A portion of the lens extends behind the plane of the plurality of LEDs such that a portion of the light is emitted as backlight. In some embodiments the driver circuitry used in the lamp uses the existing fluorescent ballast.

The lens may extend at least 180 degrees relative to the plane. The plurality of LEDs may be mounted on a base and a width of the lens may be greater than a width of the base. A ratio of the width of a base to a maximum width of the lens may be less than 1. The lens may have a height and the base may be disposed in the bottom quarter of the height of the lens. Approximately between 5 and 25 percent of the total Lumen output of the lamp may be emitted as backlight. Approximately between 10 and 20 percent of the total Lumen output of the lamp may be emitted as backlight. Approximately between 13 and 18 percent of the total Lumen output of the lamp may be emitted as backlight. The lamp may have a total Lumen output of approximately between 2,000 and 2,400 Lumens. Approximately between 105 and 600 Lumens may be emitted as backlight. Approximately between 210 and 480 Lumen may be emitted as backlight. Approximately between 273 and 432 Lumens may be emitted as backlight.

The base may be substantially planar. The base may be made of a thermally conductive material and is in thermal communication with the plurality of LEDs.

In some embodiments a lamp comprises an enclosure comprising an optically transmissive lens. A plurality of LEDs are mounted on a plane in the enclosure and extend for substantially the length of the lens. The plurality of LEDs are operable to emit light through the lens when energized through an electrical path where the light develops a total Lumen output of the lamp. Approximately between 5 and 25 percent of the total Lumen output of the lamp is emitted as backlight.

A portion of the lens may extend behind the plane of the plurality of LEDs. The lens may extend at least 180 degrees relative to the plane. Approximately between 105 and 600 Lumens may be emitted as backlight. Approximately between 5 and 25 percent of the total Lumen output of the lamp may be emitted as backlight. Approximately between 13 and 18 percent of the total Lumen output of the lamp may be emitted as backlight.

BRIEF DESCRIPTION OF THE DRAWINGS

FIG. **1** is a perspective view showing an embodiment of a LED lamp of the invention.

FIG. **2** is an exploded view of the LED lamp of FIG. **1**.

FIG. **3** is a vertical transverse section view of the LED lamp of FIG. **1**.

FIG. **4** is an end view of the LED lamp of FIG. **1** in a first position.

FIG. **5** is an end view of the LED lamp of FIG. **1** in a second position.

FIG. **6** is a perspective view of an embodiment of an end cap of the LED lamp of FIG. **1**.

FIG. **7** is a perspective exploded view showing the embodiment of a LED lamp of FIG. **1**.

FIG. **8** is an exploded perspective view showing two LED lamps of the invention mounted in tombstone connectors and a troffer housing.

FIG. **9** is a vertical longitudinal section view of the lamp of FIG. **1**.

FIG. **10** is a horizontal longitudinal section view of the lamp of FIG. **1**.

FIG. **11** is a vertical section view of the lamp of FIG. **1** through the end cap.

FIG. **12** is a detailed section view of the lamp of FIG. **1**.

FIG. **13** is a vertical section view of the troffer housing and LED lamps of FIG. **8**.

FIGS. **14** and **15** show a troffer housing and fluorescent bulbs useful in explaining the method of assembling a troffer fixture using the LED lamp of the invention.

FIGS. **16**, **17** and **18** are vertical transverse section views of alternate embodiments of the LED lamp of the invention.

FIGS. **19**, **20** and **21** are vertical transverse section views of alternate embodiments of the LED lamp of the invention.

FIG. **22** is a bottom perspective view of an alternate embodiment of the LED lamp of the invention.

DETAILED DESCRIPTION

Embodiments of the present invention now will be described more fully hereinafter with reference to the accompanying drawings, in which embodiments of the invention are shown. This invention may, however, be embodied in many different forms and should not be construed as limited to the embodiments set forth herein. Moreover, the various aspects of the embodiments as described herein may be used in combination with any other aspects of the embodiments as

described herein. Rather, these embodiments are provided so that this disclosure will be thorough and complete, and will fully convey the scope of the invention to those skilled in the art. Like numbers refer to like elements throughout.

It will be understood that, although the terms first, second, etc. may be used herein to describe various elements, these elements should not be limited by these terms. These terms are only used to distinguish one element from another. For example, a first element could be termed a second element, and, similarly, a second element could be termed a first element, without departing from the scope of the present invention. As used herein, the term "and/or" includes any and all combinations of one or more of the associated listed items.

It will be understood that when an element such as a layer, region or substrate is referred to as being "on" or extending "onto" another element, it can be directly on or extend directly onto the other element or intervening elements may also be present. In contrast, when an element is referred to as being "directly on" or extending "directly onto" another element, there are no intervening elements present. It will also be understood that when an element is referred to as being "connected" or "coupled" to another element, it can be directly connected or coupled to the other element or intervening elements may be present. In contrast, when an element is referred to as being "directly connected" or "directly coupled" to another element, there are no intervening elements present.

Relative terms such as "below" or "above" or "upper" or "lower" or "horizontal" or "vertical" or "top" or "bottom" may be used herein to describe a relationship of one element, layer or region to another element, layer or region as illustrated in the figures. It will be understood that these terms are intended to encompass different orientations of the device in addition to the orientation depicted in the figures.

The terminology used herein is for the purpose of describing particular embodiments only and is not intended to be limiting of the invention. As used herein, the singular forms "a", "an" and "the" are intended to include the plural forms as well, unless the context clearly indicates otherwise. It will be further understood that the terms "comprises" "comprising," "includes" and/or "including" when used herein, specify the presence of stated features, integers, steps, operations, elements, and/or components, but do not preclude the presence or addition of one or more other features, integers, steps, operations, elements, components, and/or groups thereof.

Unless otherwise defined, all terms (including technical and scientific terms) used herein have the same meaning as commonly understood by one of ordinary skill in the art to which this invention belongs. It will be further understood that terms used herein should be interpreted as having a meaning that is consistent with their meaning in the context of this specification and the relevant art and will not be interpreted in an idealized or overly formal sense unless expressly so defined herein.

Unless otherwise expressly stated, comparative, quantitative terms such as "less" and "greater", are intended to encompass the concept of equality. As an example, "less" can mean not only "less" in the strictest mathematical sense, but also, "less than or equal to."

The terms "LED" and "LED device" as used herein may refer to any solid-state light emitter. The terms "solid state light emitter" or "solid state emitter" may include a light emitting diode, laser diode, organic light emitting diode, and/or other semiconductor device which includes one or more semiconductor layers, which may include silicon, silicon carbide, gallium nitride and/or other semiconductor materials, a substrate which may include sapphire, silicon, silicon carbide and/or other microelectronic substrates, and one or more contact layers which may include metal and/or other conductive materials. A solid-state lighting device produces light (ultraviolet, visible, or infrared) by exciting electrons across the band gap between a conduction band and a valence band of a semiconductor active (light-emitting) layer, with the electron transition generating light at a wavelength that depends on the band gap. Thus, the color (wavelength) of the light emitted by a solid-state emitter depends on the materials of the active layers thereof. In various embodiments, solid-state light emitters may have peak wavelengths in the visible range and/or be used in combination with lumiphoric materials having peak wavelengths in the visible range. Multiple solid state light emitters and/or multiple lumiphoric materials (i.e., in combination with at least one solid state light emitter) may be used in a single device, such as to produce light perceived as white or near white in character. In certain embodiments, the aggregated output of multiple solid-state light emitters and/or lumiphoric materials may generate warm white light output having a color temperature range of from about 2200K to about 6000K.

Solid state light emitters may be used individually or in combination with one or more lumiphoric materials (e.g., phosphors, scintillators, lumiphoric inks) and/or optical elements to generate light at a peak wavelength, or of at least one desired perceived color (including combinations of colors that may be perceived as white). Inclusion of lumiphoric (also called 'luminescent') materials in lighting devices as described herein may be accomplished by direct coating on solid state light emitter, adding such materials to encapsulants, adding such materials to lenses, by embedding or dispersing such materials within lumiphor support elements, and/or coating such materials on lumiphor support elements. Other materials, such as light scattering elements (e.g., particles) and/or index matching materials, may be associated with a lumiphor, a lumiphor binding medium, or a lumiphor support element that may be spatially segregated from a solid state emitter.

As shown in FIGS. **14** and **15** show one embodiment of a traditional fluorescent troffer fixture having a housing **4***a* that may be recess mounted or flush mounted in a ceiling or other structure. Another embodiment of a fluorescent fixture **4***b* is shown in FIGS. **8** and **13** having a diffuser lens **5**. While embodiments of different types of fixtures are shown, the housing in which the lamp of the invention may be used may comprise a variety of shapes, sizes and configurations. The lamp of the invention may be used in any lighting fixture that uses conventional tombstone connectors. The housing typically supports a ballast and electrical conductors such as wiring that comprise the electrical connection between the lamp's tombstone connectors **10** and a power supply. The power supply may be the electrical grid of a building or other structure or the like. The tombstone connectors **10** connect to two pins formed on each end of a fluorescent tube **13** to provide power to the fluorescent tube. Typically, the ballast, wiring and other electrical components are retained in a compartment or wire way **12** in the housing. The wire way **12** typically comprises a recessed area or trough in the base of the housing. The wire way **12** may be covered by a removable wire way cover **14** such that the only exposed electrical components are the UL approved tombstone connectors **10**.

Because LED based solid state lamps use less energy, are more durable, operate longer, can be combined in multi-color arrays that can be controlled to deliver virtually any color light, and generally contain no lead or mercury the conversion to, or replacement of fluorescent lighting systems with, LED lighting systems is desired. In some existing replacement

lamps the entire fluorescent fixture including the troffer must be replaced. The conversion from a fluorescent light to a solid state LED based light may be time consuming and expensive. In the system of the invention, a traditional fluorescent light may be converted to an LED based solid state lamp quickly and easily by replacing the fluorescent bulb with an LED lamp. The LED lamp fits into the same housing as the fluorescent tube and uses the existing tombstone connectors to provide current to the LED lamp. The LED lamp of the invention allows a traditional fluorescent light to be converted to a solid state LED lamp without requiring specialized tools, equipment or training.

In one embodiment the LED lamp **100** comprises a generally planar or flat base **20**. The base **20** may be made of a thermally conductive material such that it functions as a heat sink to dissipate heat from the LED assembly. The base **20** may be made of a rigid material to support the LED assembly **30** and lens **50**. In some embodiments the base may be made of extruded aluminum. While aluminum may be used, other rigid, thermally conductive materials and manufacturing processes may be used to form the base **20**. While the base **20** is described as planar, the base may have surface irregularities such that while the base is generally planar or flat it is not necessarily a true planar surface. For example, in one embodiment the base comprises a flat member formed to have a centrally disposed longitudinally extending rib **22**. The rib **22** provides structural rigidity to the base **20** such that the base **20** does not flex or bend. In other embodiments the base **120** may comprise a planar member **120***a* where a separate box member **120***b* is secured to the planar member **120***a* such as by welding, adhesive fasteners or the like. While a rib **22** may be used in some embodiments to add rigidity to the base **20**, the base **220** may comprise a planar member without a reinforcement rib, as shown in FIG. **16**, where, for example, the thickness of the base provides sufficient rigidity for the lamp. The rib **22** may be formed such that it extends away from the LED assembly **30** such that a chamber **35** may be provided behind the LED assembly **30**, between the LED assembly **30** and the base **20**. In the embodiment of FIG. **17** chamber **134** is formed between the planar member **120***a* and the box member **120***b*. The chamber **35**, **135** may support lamp components such as connectors or the like. In other embodiments the rib **22** may extend to the same side as the LED assembly **30** such that the LED assembly **30** is held in an offset position relative to the remainder of the base **20** as shown in FIG. **18**. In the embodiment of FIG. **18** the arrangement of the rib creates an exterior channel **33** that extends along the base and is open to the exterior of the lamp. Any of the bases disclosed herein may be used with any of the translucent lenses disclosed herein. The term planar as used herein to describe the base is intended to define a base that is non-round and that creates a generally flat top surface of the lamp **100**. Referring to FIG. **22** the base **20** may be formed with extending fins **23** that create a heat sink to increase the surface area of the base and increase heat transfer to the ambient environment.

The LED lamp **100** comprises an LED assembly **30** that may be supported by and secured to the base **20**. The LED assembly **30** may comprise a plurality of LEDs or LED packages **32** that extend the length of, or substantially the length of, the base **20** to create a desired light pattern. The LEDs **32** may be arranged such that the light pattern extends the length of, or for a substantial portion of the length of, the lamp and is similar in length to a traditional fluorescent bulb. While in one embodiment the LEDs **32** extend for substantially the entire length of the base **20**, the LEDs **32** may be arranged in other patterns and may extend for less than substantially the entire length of the base if desired. For example, the LEDs may be disposed along the edges of the LED board **34** and directed toward the middle of the lamp. The LEDs may be directed into a waveguide. The LEDs **32** may be mounted on a LED board **34** that provides physical support for the LEDs **32** and provides an electrical path for providing electrical power to the LEDs. The electrical path provides power to the LEDs and may comprise the power source, board **34** and intervening lamp electronics. The board **34** may comprise MCPCB, FR4, a flex circuit, lead frame or other suitable mounting substrate for the LEDs. The board may comprise the electrical components that form part of the electrical path to the LEDs or electrical conductors may comprise separate elements that are supported by the board. In the illustrated embodiments the base **20** and the LED board **34** are shown as separate physical elements; however, the LED board **34** and the base **20** may be a single element where the LED board has the structural integrity to support the lamp components.

The LEDs **32** may be provided in a wide variety of patterns and may include a wide variety of different types and colors of LEDs to produce light in a wide variety of colors and/or light patterns. In some embodiments LEDs as disclosed herein may include one or more light affecting elements (including light transmissive, light-absorptive, light reflective and/or lumiphoric materials) formed on, over or around at least one solid state light emitter including fused elements embodying a plurality of dots, rods, or layers such as may be formed by three-dimensional (3D) printing. Further details regarding formation of light affecting elements including fused elements such as may be formed by 3D printing are disclosed in a related U.S. patent application Ser. No. 13/943,043 entitled "SOLID STATE LIGHTING DEVICES AND FABRICATION METHODS INCLUDING LIGHT-AFFECTING ELEMENTS" by Medendorp et al., filed Jul. 16, 2013, the disclosure of which is incorporated by reference herein in its entirety. In some embodiments, the LED assembly **30** may comprise more than one board where the boards are connected to one another at a connector **33** to provide an electrical path between the individual boards. The connector **33** comprises mating electrical connectors on the boards such that the mating electrical connectors may be connected to create an electrical path along the length of the board. In the illustrated embodiment the connector **33** is shown on the opposite surface of board **34** from the LEDs such that the connector **33** is located in the chamber **35**. Alternatively, the connector may be on the same side of the board as the LEDs. One embodiment of a LED lamp and suitable LED structure is shown and described in U.S. patent application Ser. No. 12/873,303 entitled "Troffer-Style Fixture" filed on Aug. 31, 2010, which is incorporated by reference herein in its entirety. Example embodiments of interfacing one or more LEDs to AC-output lighting ballasts are described in a related U.S. patent application Ser. No. 13/943,376 entitled "LED LIGHTING APPARATUS FOR USE WITH AC-OUTPUT LIGHTING BALLASTS" by Zhang et al., filed Jul. 16, 2013, the disclosure of which is incorporated by reference herein in its entirety. Example embodiments of interfacing LED strings to fluorescent emergency lighting ballasts are described in a related U.S. patent application Ser. No. 13/943,455 entitled "EMERGENCY LIGHTING CONVERSION FOR LED STRINGS" by McBryde et al., filed Jul. 16, 2013, the disclosure of which is incorporated by reference herein in its entirety. Example embodiments of suitable driver circuitry for use in the lamp of the invention are described in U.S. application Ser. No. 14/055,264 entitled "SOLID-STATE LIGHTING APPARATUS WITH FILIAMENT IMITATION FOR USE WITH FLORESCENT BALLASTS" by Zhang, filed Oct. 16, 2013, the disclosure of which is incorporated by

reference herein in its entirety; and U.S. application Ser. No. 14/256,573 entitled "SOLID-STATE LIGHTING APPARATUS WITH FILIAMENT IMITATION FOR USE WITH FLORESCENT BALLASTS" by Zhang, filed Apr. 18, 2014, the disclosure of which is incorporated by reference herein in its entirety. The driver circuitry described herein and as used in the lamp may use the existing fluorescent ballast in some embodiments.

The board **34** may be supported by the base **20** such that the board **34** and LEDs **32** are supported for the length of the lamp. In one embodiment the base **20** comprises a first inwardly opening C-channel **40** that extends along the length of one side of the base **20** and a second inwardly opening C-channel **42** that extends along the length of the opposite side of the base **20**. In one embodiment the channels **40**, **42** extend for the length of the base **20**; however, the channels **40**, **42** may extend for less than the entire length of the base **20** provided that they adequately support and retain the board **34**. For example, gaps may be provided in the channels **40**, **42**. The channels **40**, **42** face one another to create a receptacle for receiving the board **34**. In one embodiment the longitudinal edges of the board **34** are inserted into the channels **40**, **42** such that the board **34** may be retained in the channels **40**, **42** and supported on the base **20**. The board **34** may be retained by friction, a mechanical engagement, a pressure fit, adhesive, mechanical connector or other connection mechanism. To assemble the board **34** and base **20** the board may be inserted into the channels from one end of the base **20** and slid into engagement with the channels **40**, **42**. The board **34** is thermally coupled to the base **20** such that heat generated by the LEDs **32** is transferred to the base **20** via the board **34** and is dissipated to the ambient environment by the base **20**. The thermal couple between the board **34** and base **20** may be provided by providing surface to surface contact between the board and the base. In other embodiments thermally transmissive layers may be provided between the base and the board. For example, thermal adhesive may be used to attach the board **34** to the base **20**.

The LED assembly **30** may be made removable from the base **20** for maintenance purposes or to vary the light output for different applications. The LED assembly **30** may be made removable by attaching the board **34** to the base **20** using a releasable connection mechanism such as, but not limited to, a friction fit or a snap-fit connection, screws or other releasable fasteners or the like. The base **20** and LED assembly **30** may be made of a reflective material, e.g., MCPET, white optic, or the like, to reflect light from the mixing chamber **51**. The entire base and/or board may be made of a reflective material or portions of the base and/or board may be made of reflective material. For example, portions of the base and/or board that may reflect light may be made of reflective material.

A lens **50** may be connected to the base **20** to cover the LED assembly **30** and create a mixing chamber **51** for the light emitted from the LEDs **32**. The light is mixed in the chamber **51** and the lens **50** diffuses the light to provide a uniform, diffuse, color mixed light pattern. The lens **50** may be made of molded plastic or other material and may be provided with a light diffusing layer. The light diffusing layer may be provided by etching, application of a coating or film, by the translucent or semitransparent material of the lens, by forming an irregular surface pattern during formation of the lens or by other methods. Because the lens has a flattened non-round profile, a greater distance between the LEDs and the lens can be provided than with a round lens having the same height. As a result more optical spreading distance is provided between the lens and the LEDs to provide better mixing.

In some embodiments the lens **50** has a dome-shaped cross-sectional profile as shown for example in FIGS. **2** and **3**. The lens **50** extends substantially the length of the base **20** to cover the LEDs **32** supported on the base **20**. In some embodiments, the longitudinal edges **50***a*, **50***b* of the lens **50** are provided with inwardly facing lips or projections **52** and **54** that may be received in outwardly facing longitudinal C-channels **56**, **58** formed along the longitudinal edges of the base **20**. The lens **50** and projections **52**, **54** may be formed as one piece such as by a plastic molding process. In some embodiments, the base **20** may be formed of extruded, stamped or rolled metal where the channels **56** are formed as one-piece with the base; however, the channels may be separately attached to the base. The projections **52**, **54** are inserted into the channels **56**, **58** to retain the lens **50** on the base **20**. The projections **52**, **54** may be slid into the channels **56**, **58** from the end of the base **20**. If the lens **50** is made of an elastic material, such as molded plastic, the projections **52**, **54** may also be inserted into the channels **56**, **58** by inserting a first projection **52** into one of the channels **56** and deforming the lens to insert the opposite projection **54** into the opposite channel **58**. The lens **50** may then be released such that the lens elastically returns to its original shape where the projections **52**, **54** are forced into the opposed channels **56**, **58**. As shown in the figures in some embodiments the base **20** has a generally planar shape with an S-channel formed along the longitudinal edges thereof. The S-channel defines inwardly facing channels **40**, **42** for receiving the board **34** and outwardly facing channels **56**, **58** for receiving the projections **52**, **54** of lens **50**.

As illustrated in the figures the lens **50** is arranged such that the lens **50** extends above or behind the plane A-A of the LEDs **32**. Behind as used herein means toward the side of the board opposite the LEDs. In other words, from a point located on the LED **32** the lens **50** extends for an angle α greater than 180 degrees (or greater than 90 degrees in each direction from a line that extends perpendicularly from the LED). In some embodiments the lens **50** may extend at an angle α greater than 215 degrees. In other embodiments, the lens **50** may extend at an angle α greater than 270 degrees. Moreover, to the lateral sides of the LEDs the base and LED board do not include any portions that extend to block light emitted by the LEDs. The planar LED board and base **20** do not obstruct light emitted laterally from the LEDs. As a result of this arrangement some of the light generated by the LEDs **32** is directed as backlight in a direction behind the plane A-A of the LEDs **32**. The light is directed toward the light housing **4***a*, **4***b* where it can be reflected by the housing to create a light distribution pattern that is similar to the light distribution pattern of a traditional fluorescent system. It will be understood that in a traditional fluorescent system the fluorescent tube generates light over 360 degrees. As a result, some of the light generated by the fluorescent tube is reflected from the housing. By arranging the lens **50** such that it extends behind the plane A-A of the LEDs **32**. Some of the light generated by the LEDs **32** may be emitted directly out of the lamp as backlight while additional light may be reflected off of the lens **50** and emitted as backlight. Such an arrangement provides an LED lighting system that provides a light distribution pattern that is similar to legacy fluorescent tube lights. In some embodiments, the LEDs may be center mounted with greater side emitting optical profiles such as CREE XPQ LEDs. In some embodiments a prismatic lens or parabolic reflectors may be used to create a desired light distribution. In some embodiments the lens **50** may not include side walls such that the lens covers only the bottom of the lamp with the sides of the enclosure open to the external environment.

Further, as shown in FIG. **3** the lens **50**, in some embodiments, may be configured such that the width of the lens **50** at its widest portion B is larger than the width W of the base **20**. In other words the ratio of the base width W to the maximum lens width B is less than 1. As a result light may be emitted from the lens **50** as backlight that is not blocked by the base **20**. The backlight may be reflected from the light housing **4** to create the light distribution pattern described above.

Referring to FIG. **19** an alternate embodiment of the lens **50** is shown where the lens is provided with a cross-sectional profile where the lens has a relatively square or rectangular shape. FIG. **20** illustrates another embodiment of the lens **50** where the lens comprises faceted profile where the lens comprises a plurality of planar surfaces **50***a*-**50***g*. The lens may comprise a regular or irregular polygon such and may include a wide variety of number of surfaces such as 4, 5, 6, 7, 8, 9, 10 or more sides. FIG. **21** illustrates another embodiment of the lens **50** where the lens comprises a generally triangular profile. While the illustrate lens terminates a flat face **50***h* that extends generally parallel to the base **20** the lens may terminate in a corner where sides **50***i* meet at an acute angle. The lens is disposed as previously described where the lens **50** extends above or behind the plane A-A of the LEDs **32**. Further, as previously explained the width of the lens **50** at its widest portion B is larger than the width W of the base **20**. In other words the ratio of the base width W to the maximum lens width B is less than 1. As a result light may be emitted from the lens **50** as backlight that is not blocked by the base **20**.

In some embodiments the lens **50** and base **20** are arranged such that the LEDs mounted on the base **20** are disposed in the top 30-35% of the height of the lens and in some embodiments the LEDs mounted on the base **20** are disposed in the top 25% of the height of the lens. Referring to FIG. **3**, if the lens has a height of H, then the base **20** and LEDs **32** are disposed between the top of the lamp and a distance 0.25H from the top of the lamp for example. Arranging the LEDs in such a position relative to the overall height of the lamp allows the lens to be disposed such that backlight is created as previously described.

In one embodiment a lamp as described herein comprises 105 XH-G LEDs manufactured and sold by CREE, INC. Such a lamp may have a total Lumen output of approximately between 2,200 and 2,300 Lumens, and more specifically 2,244 Lumens. In this embodiment approximately 389 Lumens or 17.3% of the total Lumen output is emitted as backlight (zone **90-180**) with the remaining Lumens emitted as light toward the front of the lamp. Charts showing the Lumen output per zone of the lamp are set forth below.

Zonal Lumen Summary		
Zone	Lumens	% Luminaire
0-30	412.5	18.4%
0-40	684.9	30.5%
0-60	1,266.5	56.4%
60-90	588.3	26.2%
70-100	444.0	19.8%
90-120	255.3	11.4%
0-90	1,854.9	82.7%
90-180	389.0	17.3%
0-180	2,243.9	100%

-continued

Lumens Per Zone		
Zone	Lumens	% Total
0-5	12.5	0.6%
5-10	37.0	1.7%
10-15	60.6	2.7%
15-20	82.4	3.7%
20-25	101.8	4.5%
25-30	118.3	5.3%
30-35	131.4	5.9%
35-40	141.0	6.3%
40-45	146.7	6.5%
45-50	148.4	6.6%
50-55	146.2	6.5%
55-60	140.2	6.3%
60-65	131.0	5.8%
65-70	119.2	5.3%
70-75	105.3	4.7%
75-80	90.7	4.0%
80-85	76.9	3.4%
85-90	65.3	2.9%
90-95	56.4	2.5%
95-100	49.5	2.2%
100-105	44.0	2%
105-110	39.3	1.8%
110-115	35.0	1.6%
115-120	31.1	1.4%
120-125	27.4	1.2%
125-130	23.8	1.1%
130-135	20.3	0.9%
135-140	17.0	0.8%
140-145	13.8	0.6%
145-150	10.8	0.5%
150-155	8.1	0.4%
155-160	5.8	0.3%
160-165	3.8	0.2%
165-170	2.1	0.1%
170-175	0.7	0%
175-180	0.1	0%

In another embodiment 120 XH-G LEDs manufactured and sold by CREE, INC. are used. Charts showing the Lumen output per zone of the lamp are set forth below. The total lumen backlight (zone **90-180**) is about 14.6% of the total lumen output. Such a lamp may have a total Lumen output of approximately between 2,300 and 2,400 Lumens, and more specifically about 2,322 Lumens. In the example embodiments used to create the zonal Lumen results described herein, the lamp was connected to an existing ballast using the driver circuitry described herein, and as specifically described in U.S. application Ser. No. 14/055,264 entitled "SOLID-STATE LIGHTING APPARATUS WITH FILIAMENT IMITATION FOR USE WITH FLORESCENT BALLASTS" by Zhang, filed Oct. 16, 2013, the disclosure of which is incorporated by reference herein in its entirety; and U.S. application Ser. No. 14/256,573 entitled "SOLID-STATE LIGHTING APPARATUS WITH FILIAMENT IMITATION FOR USE WITH FLORESCENT BALLASTS" by Zhang, filed Apr. 18, 2014, the disclosure of which is incorporated by reference herein in its entirety.

Zonal Lumen Summary		
Zone	Lumens	% Luminaire
0-20	203.70	8.80%
0-30	436.43	18.80%
0-40	725.57	31.20%
0-60	1347.51	58.00%
0-80	1830.68	78.80%
0-90	1983.25	85.40%

-continued

Zonal Lumen Summary		
10-90	1930.83	83.20%
20-40	521.87	22.50%
20-50	836.74	36.00%
40-70	892.40	38.40%
60-80	483.17	20.80%
70-80	212.71	9.20%
80-90	152.57	6.60%
90-110	201.87	8.70%
90-120	269.09	11.60%
90-130	313.36	13.50%
90-150	338.47	14.60%
90-180	338.80	14.60%
110-180	136.94	5.90%
0-180	2322.05	100.00%

Zone	Lumens
0-10	52.42
10-20	151.29
20-30	232.73
30-40	289.14
40-50	314.87
50-60	307.07
60-70	270.46
70-80	212.71
80-90	152.57
90-100	112.94
100-110	88.92
110-120	67.23
120-130	44.27
130-140	21.15
140-150	3.97
150-160	0.09
160-170	0.15
170-180	0.09

An explanation of the above-referenced charts will be provided with reference to FIG. **3**. Each zone is defined by an angle β where the angle β is the angle between a first line extending from the LEDs **32** at the first value of the zone and a second line extending from the LEDs **32** at the second value of the zone, where a line extending perpendicularly from the LEDs toward the front of the lamp (i.e. toward the lens **50**) is angle 0. The actual zone includes the space bounded by the lines that are defined by angle β and the negative angle β. Thus, for example, zone **0-30** defines a three-dimensional space included between β from 0 to 30 degrees and −β from 0 to 30 degrees for the length of the lamp. In other words, zone **0** to **30** is a 60 degree section of the emitted light that extends for the length of the lamp. In another example zone **90-180** is a zone where β starts at 90 degrees (parallel to the board **34**) and ends at 180 degrees and −β starts at 90 degrees (parallel to the board **34**) and ends at 180 degrees such that the zone is 180 degree section of the emitted light that extends for the length of the lamp. Light emitted in zone **90-180** defines backlight of the lamp. Thus, for any designated zone angle, the zone includes two three-dimensional sections of the lamp, one section defined by the angle range β and one defined by the same angle range at −β.

In some embodiments the distribution of light may be considered in terms of lumen output or in terms of percentage of lumen output. In some embodiments the LED assembly and lens are configured as described herein such that approximately between 5 and 25 percent of the total Lumen output of the lamp is emitted as backlight, and in some embodiments approximately between 10 and 20 percent of the total Lumen output of the lamp is emitted as backlight; and in one embodiment approximately between 13 and 18 percent of the total Lumen output of the lamp is emitted as backlight. Depending on the orientation and light distribution of the LEDs and the lens shape and size relative to the base, the light distribution can yield a lower or higher percentage of backlight. In different embodiments the lamp may comprise 140, 120 or 105 XH-G LEDs may be used although different numbers, types and arrangements of LEDs are possible. In some embodiments approximately between 105 and 600 Lumens are emitted as backlight, and in some embodiments approximately between 210 and 480 Lumens are emitted as backlight; and in one embodiment approximately between 273 and 432 Lumens are emitted as backlight. The light may be at different color temperatures. In some embodiments, the color temperature is between 3000K and 4500K, between about 3400K and 4100K. And, in some embodiments the color temperature may be about 3500K and about 4000K. Different CRI values are possible such as at least 80, at least 85 or at least 90. In one embodiment the CRI may be about 90. In another exemplary embodiment the LED assembly comprises 120 XH-G LEDs manufactured and sold by CREE, INC. In some embodiments the lamp may have a total Lumen output of approximately 2100 Lumens at least 100 Lumens per watt. The lamp may have a total Lumen output of approximately 2000 Lumens or greater. The output numbers may also fluctuate based on the existing ballast being used.

End caps **60** may be provided at the opposite ends of the lens **50** to close the interior mixing chamber **52** of LED lamp **100** and to support the electrical connectors **94** for connecting to the tombstone connectors **10** of the housing. The end caps **60**, base **20** and lens **50** together define an enclosure that retains the LEDs **32**. The enclosure is partially optically transmissive through the lens **50**.

The end caps **60** are identical such that the structure and operation of one end cap will be described. The end cap **60** comprises an internal chamber **62** defined by a side wall **61** and an end wall **63** dimensioned and shaped to closely receive the base **20**, LED board **34** and lens **50**. In one embodiment the lens **50**, LED board **34**, and base **20** are slid into the chamber **62** and a snap-fit connection is used to secure the end caps **60** these components. In one embodiment the end cap **60** is provided with two deformable locking members **64** that engage the LED board **34** when the LED board **34** is inserted onto the end cap **60**. The locking members **64** are made of resilient material and have a first end connected to the end cap **60** and an engagement member **66** at the free end that engage apertures **68** formed on the LED board **34**. The locking members **64** may be deformed by the board **34** as the board is inserted into the chamber **62**. To facilitate the deformation of the locking members **64** the ends of the locking members **64** are formed with angled surfaces **65** that are engaged by the board as the board is slid into the end cap **60**. When the apertures **68** are aligned with the engagement members **66** the locking members **64** return to the undeformed locking position such that the engagement members **66** are biased into engagement with the apertures **68**. The engagement of the engagement members **66** with the side walls of the apertures **68** secures the end cap **60** to the board **34**. Because the board **34** is secured to the base **20** and the lens **50** is secured to the base **20** all of the components are secured together by the engagement of the locking members **64** with the apertures **68**. To properly align the board **34** with the end cap **60** and to provide a secure engagement between the end cap **60** and the other components, an alignment member **70** may extend from the end cap that engages the chamber **35** formed between the base **20** and the board **34**. In this manner the board **34** is trapped between the fingers **64** and the alignment member **70**, and the base **20** is trapped between the alignment member **70** and the wall of the end cap **60**. These members may be

dimensioned such that a friction fit is created between the members to further secure the end caps **60** to the lens **50**, LED board **34**, and base **20**. Other arrangements of a snap-fit connector may be used. For example a fewer or greater number of locking members may be used. The deformable locking members may be formed on the board and the apertures or other mating receptacles may be formed on the end caps. Both of the mating members may be deformable. Rather than using deformable members the locking members may comprise rigid members that are biased to the locking position by separate springs. The specific configuration of the mating snap-fit members may change from that shown. Moreover, the locking members may engage the base **20** and/or lens **50** rather than or in addition to engaging the board **34**. While use of a snap-fit connector provides a simple assembly method that does not require additional tools, assembly steps or fasteners, the end caps **60** may be connected to the lens **50**, LED board **34**, and base **20** using other connection mechanisms such as separate fasteners, adhesive, or the like.

The end wall **63** defines an aperture **72** for receiving the electrical connector of the lamp. The electrical connector comprises a rotating control member **76** that is fixed in the aperture **72** such that the control member **76** may rotate relative to the end cap **60** but is otherwise fixed to the end cap. In one embodiment the rotating control member **76** includes deformable fingers **78** that extend into the aperture **72** and have locking portions **80** that engage the interior edge of the aperture **72**. The fingers **78** are dimensioned such that the end wall **63** is trapped between the locking portions **80** and the body **82** of the control member **76** but the control member **76** is free to rotate relative to the end wall **63**. In one embodiment the fingers **78** may deform to allow the locking portions **80** to be inserted into the aperture **72**. Once the locking portions **80** are positioned inside of the aperture **72** the fingers **78** return to the undeformed state where the locking portions **80** are disposed behind the end wall **63**. Other mechanisms for mounting the rotating member to the end caps may also be used. The rotating control member **76** may be provided with a protruding area **84** that extends beyond the wall of the end cap **60** and that may be easily accessed by a user to rotate the control member **76** during installation of the lamp as will be described. The protruding area **84** may be knurled to facilitate the rotation of the control member **76**.

The control member **76** rotates a plate **90** that carries a pair of pins **94**. The plate **90** is mounted for rotation with the control member **76** such that rotation of the control member **76** rotates plate **92**. The pins **94** are mounted in apertures **96** in the plate **90** and are positioned and dimensioned such that the pins **94** on opposite ends of the lamp **100** are able to engage the tombstone connectors **10**. In one embodiment the plate **92** includes deformable fingers **98** that extend into the aperture **101** formed in the control member **76**. The fingers **98** and have locking portions **102** that engage the interior edge of the aperture **72**. The fingers **98** are dimensioned such that the control member **76** is trapped between the plate **90** and end cap **60**. The fingers **98** extend between the fingers **78** of control member **76** such that the control member **76** and the plate **92** are constrained to rotate together. In one embodiment the fingers **98** may deform to allow the locking portions **102** to be inserted into the aperture **72**. Once the locking portions **102** are positioned inside of the aperture **72** the fingers **98** return to the undeformed state where the locking portions **102** are disposed behind the end wall **63**. Other mechanisms for mounting the control member and plate to the end caps may also be used. While the plate **90** and control member **76** are disclosed as being separate members that are connected for simultaneous rotation these members may be combined in a single unitary member.

The pins **94** extend through apertures **96** such that the pins communicate with the interior of the lamp. The pins may be fixed to the plate **92** using any suitable connection mechanism including a press fit, adhesive, mechanical connector or the like. Conductors **104** are electrically coupled to the pins and to electrical contacts **106** formed on or with the LED board **34** to complete the electrical path between the pins **94** and the LED board **34**. The conductors **104** may comprise wires, ribbons or the like that are soldered or otherwise electrically coupled to the pins **94** and to contacts **106** on the LED board **34**. In some embodiments a single pin may be used to complete the electrical connection where the second pin may be used only to provide physical support for the lamp in the tombstone connectors.

The typical tombstone connector **10** comprises a linear slot **200** that communicates with the exterior of the connector through an opening **202**. A circular slot **204** communicates with the linear slot **200** such that the linear slot bisects the circular slot. An electrical contact is located in each half of the circular slot **204** where the contacts are connected in the electrical path. The pins **94** are positioned on the lamp **100** such that they can be inserted through opening **202** into the linear slot **200** where the pins **94** are disposed at the intersection of the circular slot **204** and the linear slot **200**. The plate **90** can then be rotated to move the pins **94** in the circular slot **204** such that one pin engages each one of the electrical contacts of tombstone connector **10**.

Because the lamp of the invention is intended to be used as a replacement for standard fluorescent tubes the pins **94** are positioned in the same relative location as the pins on a standard fluorescent tube such that the lamp of the invention may be used in standard fluorescent housings and with standard tombstone connectors. The length of the lamp **100** of the invention may also be dimensioned to fit standard fluorescent bulb length housings such that the enclosure extends between the tombstone connectors **10** with the pins **94** extending parallel to the longitudinal axis of the lamp. In some embodiments where the lamp **100** of the invention is used to replace a standard 1 inch fluorescent tube the lamp of the invention may have a height of approximately 1 inch and a width of 1-2 inches.

To assemble the lamp of the invention, an LED board **34** is populated with LEDs **32**. The LED board **34** is inserted into the C-channels **40**, **42** of the base **20** such that the board **34** is secured to and supported by the base **20**. In addition to supporting the board **34** the base **20** also functions as a heat sink to dissipate heat generated by the LEDs **32** to the ambient environment. The wires **104** from the end caps are then soldered or otherwise electrically coupled to the electrical path on the board **34**. The lens **50** is mounted to the base **20** by inserting the flanges **52**, **54** of the lens into the mating C-channels **56**, **58** on the base **20**. The flanges may be slid into the C-channels or the lens may be deformed and snap-fit into the C-channels. The first and second end caps **60** may be slid over the lens **50**, board **34** and base **20** to engage the snap-fit connector to complete the lamp.

To retrofit an existing fluorescent fixture, the existing fluorescent tubes **13** are removed from the fixture housing. The control members **76** are rotated relative to the enclosure such that the pins **94** are aligned along a line perpendicular to the base **20** as shown in FIGS. **5** and **6**, and in the right hand connector of FIG. **1**. In a typical ceiling mount fixture the control member **76** is rotated such that the pins are aligned generally vertically. The lamp **100** is inserted into the housing

4 such that the pins **94** are inserted into the linear slot **200** of the tombstone connectors **10**. Once the lamp **100** is properly positioned in the housing and the pins **94** are seated in the tombstone connectors **10**, the control member **76** is rotated 90 degrees relative to the enclosure by the user to rotate the plate **90** and pins 90 degrees (as shown in FIG. **4** and the left hand connector of FIG. **1**.). The pins rotate in the in the circular slots **204** of the tombstone connectors **10**. The enclosure remains stationary during the rotation of the pins. The pins **94** are rotated to engage the existing electrical contacts in the tombstone connectors **10**. Because the pins are rotatable relative to the enclosure, the enclosure may be rotated relative to the pins after the lamp is mounted in the housing to provide more directional light.

While the housing **4** and LED lamp **100** have been described herein as a retrofit of a traditional fluorescent light, the LED lamp **100** and the assembly method described herein may also be used to make new LED based fixtures. An LED lamp **100** as described herein may be manufactured as a complete subassembly and may be attached to a new housing **4** as described to create a new fixture.

Although specific embodiments have been shown and described herein, those of ordinary skill in the art appreciate that any arrangement, which is calculated to achieve the same purpose, may be substituted for the specific embodiments shown and that the invention has other applications in other environments. This application is intended to cover any adaptations or variations of the present invention. The following claims are in no way intended to limit the scope of the invention to the specific embodiments described herein.

The invention claimed is:

1. A lamp comprising:

an enclosure comprising a generally planar base and an optically transmissive lens;

a plurality of LEDs mounted in the enclosure and operable to emit light through the lens when energized through an electrical path, the plurality of LEDs defining a plane;

a portion of the lens extending behind the plane of the plurality of LEDs and the base having a first width and the lens having a second internal width at its widest portion in front of the plane where the second internal width is greater than the first width such that a portion of the light is emitted as backlight behind the plane.

2. The lamp of claim **1** wherein the lens extends at least 180 degrees relative to the plane.

3. The lamp of claim **1** wherein the lens has a height and the base is disposed in the bottom quarter of the height of the lens.

4. The lamp of claim **1** wherein approximately between 5 and 25 percent of the total Lumen output of the lamp is emitted as backlight.

5. The lamp of claim **1** wherein approximately between 10 and 20 percent of the total Lumen output of the lamp is emitted as backlight.

6. The lamp of claim **1** wherein approximately between 13 and 18 percent of the total Lumen output of the lamp is emitted as backlight.

7. The lamp of claim **1** wherein the lamp has a total Lumen output of approximately between 2,000 and 2,400 Lumens.

8. The lamp of claim **1** wherein approximately between 105 and 600 Lumens are emitted as backlight.

9. The lamp of claim **1** wherein approximately between 210 and 480 Lumen are emitted as backlight.

10. The lamp of claim **1** wherein approximately between 273 and 432 Lumens are emitted as backlight.

11. The lamp of claim **1** wherein the base is made of a thermally conductive material and is in thermal communication with the plurality of LEDs.

12. The lamp of claim **1** wherein driver circuitry provides power to the plurality of LEDs where the driver circuitry is connected to existing fluorescent light ballast circuitry.

13. A lamp comprising:

a linear enclosure having a first end and a second end comprising an optically transmissive lens and at least one pin extending from each of the first end and the second end;

a plurality of LEDs mounted on a board having a linear edge in the enclosure and extending for substantially the length of the lens, the plurality of LEDs defining a plane and being operable to emit light through the lens when energized through an electrical path wherein the light develops a total Lumen output of the lamp, the lens being configured such that the lens is spaced laterally from the linear edge wherein approximately between 5 and 25 percent of the total Lumen output of the lamp is emitted as backlight behind the plane.

14. The lamp of claim **13** wherein a portion of the lens extends behind the plane of the plurality of LEDs.

15. The lamp of claim **13** wherein the lens extends at least 180 degrees relative to the plane.

16. The lamp of claim **13** wherein approximately between 168 and 720 Lumens are emitted as backlight.

17. The lamp of claim **13** wherein approximately between 10 and 20 percent of the total Lumen output of the lamp is emitted as backlight.

18. The lamp of claim **13** wherein approximately between 13 and 18 percent of the total Lumen output of the lamp is emitted as backlight.

19. The lamp of claim **13** wherein driver circuitry provides power to the plurality of LEDs where the driver circuitry is connected to existing fluorescent light ballast circuitry.

20. A lamp comprising:

a linear enclosure comprising an optically transmissive lens;

a plurality of LEDs mounted on an LED board in the enclosure and operable to emit light through the lens when energized through an electrical path, the plurality of LEDs defining a plane;

wherein the lens has a height, a portion of the lens extending behind the plane of the plurality of LEDs and the LED board being disposed in the bottom quarter of the height of the lens such that a portion of the light is emitted as backlight behind the plane.

21. A lamp comprising:

an enclosure comprising an optically transmissive lens;

a plurality of LEDs mounted on a base in the enclosure and operable to emit light through the lens when energized through an electrical path, the plurality of LEDs defining a plane;

a portion of the lens extending behind the plane of the plurality of LEDs and a width of the lens being greater than a width of the base wherein the lens has a height and the base is disposed in the bottom quarter of the height of the lens such that a portion of the light is emitted as backlight behind the plane.

* * * * *