US009126191B2

(12) **United States Patent**
Yin et al.

(10) **Patent No.: US 9,126,191 B2**
(45) **Date of Patent: Sep. 8, 2015**

(54) **ADVANCED CATALYSTS FOR AUTOMOTIVE APPLICATIONS**

(75) Inventors: **Qinghua Yin**, Tempe, AZ (US); **Xiwang Qi**, Scottsdale, AZ (US); **Maximilian A. Biberger**, Scottsdale, AZ (US)

(73) Assignee: **SDCmaterials, Inc.**, Tempe, AZ (US)

(*) Notice: Subject to any disclaimer, the term of this patent is extended or adjusted under 35 U.S.C. 154(b) by 772 days.

(21) Appl. No.: **12/962,490**

(22) Filed: **Dec. 7, 2010**

(65) **Prior Publication Data**

US 2011/0143933 A1 Jun. 16, 2011

Related U.S. Application Data

(60) Provisional application No. 61/284,329, filed on Dec. 15, 2009.

(51) **Int. Cl.**

B01J 21/00	(2006.01)
B01J 21/04	(2006.01)
B01J 23/00	(2006.01)
B01J 23/02	(2006.01)

(Continued)

(52) **U.S. Cl.**

CPC ***B01J 23/8926*** (2013.01); ***B01J 23/42*** (2013.01); ***B01J 35/0013*** (2013.01); ***B01J 37/00*** (2013.01); ***B01J 37/009*** (2013.01); ***B01J 37/0211*** (2013.01); ***B01J 37/32*** (2013.01); ***B01J 37/349*** (2013.01); ***B28B 23/0087*** (2013.01); ***B32B 7/12*** (2013.01); ***B32B 37/14*** (2013.01); ***B82Y 30/00*** (2013.01); ***B82Y 40/00*** (2013.01); ***C23C 4/127*** (2013.01); *Y02T 10/22* (2013.01)

(58) **Field of Classification Search**

USPC 502/261–263, 327, 332, 333, 334, 339, 502/355, 415, 439, 527.12, 527.13, 527.19; 977/773, 775

See application file for complete search history.

(56) **References Cited**

U.S. PATENT DOCUMENTS

2,021,936	A	11/1935	Johnstone	
2,284,554	A	5/1942	Beyerstedt	196/10

(Continued)

FOREIGN PATENT DOCUMENTS

CN	101301610	A	11/2008
DE	34 45 273	A1	6/1986

(Continued)

OTHER PUBLICATIONS

Faber, K. T. et al. (Sep. 1988). "Toughening by Stress-Induced Microcracking in Two-Phase Ceramics," Communications of the American Ceramic Society 71(9): C-399-C401.

(Continued)

Primary Examiner — Cam N. Nguyen

(74) *Attorney, Agent, or Firm* — Morrison & Foerster LLP

(57) **ABSTRACT**

Embodiments of present inventions are directed to an advanced catalyst. The advanced catalyst includes a honeycomb structure with an at least one nano-particle on the honeycomb structure. The advanced catalyst used in diesel engines is a two-way catalyst. The advanced catalyst used in gas engines is a three-way catalyst. In both the two-way catalyst and the three-way catalyst, the at least one nano-particle includes nano-active material and nano-support. The nano-support is typically alumina. In the two-way catalyst, the nano-active material is platinum. In the three-way catalyst, the nano-active material is platinum, palladium, rhodium, or an alloy. The alloy is of platinum, palladium, and rhodium.

31 Claims, 10 Drawing Sheets

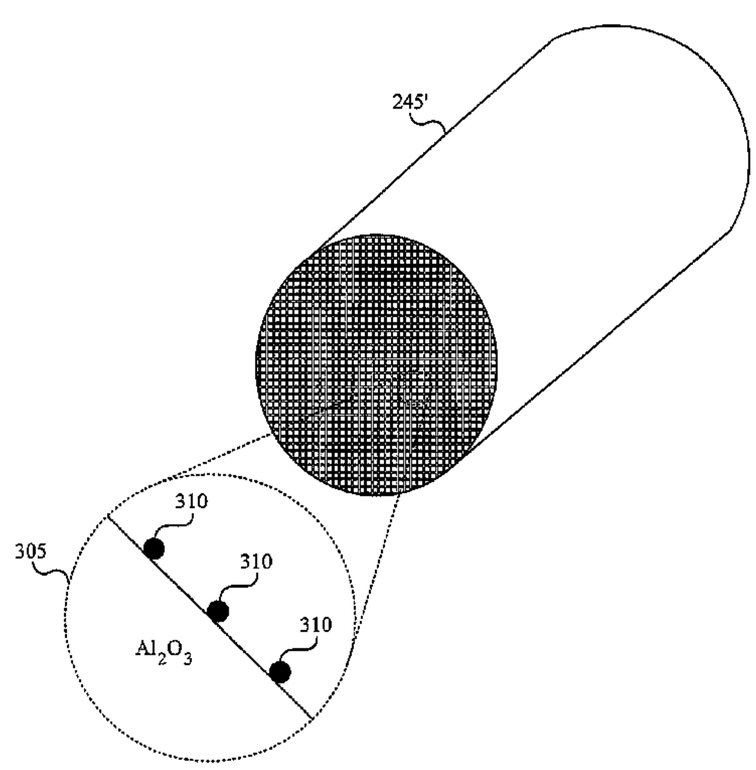

(51) **Int. Cl.**

B01J 23/08	(2006.01)
B01J 23/40	(2006.01)
B01J 23/42	(2006.01)
B01J 23/44	(2006.01)
B01J 23/56	(2006.01)
B01J 20/00	(2006.01)
B01J 23/89	(2006.01)
B01J 35/00	(2006.01)
B01J 37/00	(2006.01)
B01J 37/32	(2006.01)
B01J 37/34	(2006.01)
B28B 23/00	(2006.01)
B32B 7/12	(2006.01)
B32B 37/14	(2006.01)
B82Y 30/00	(2011.01)
B82Y 40/00	(2011.01)
C23C 4/12	(2006.01)
B01J 37/02	(2006.01)

(56) **References Cited**

U.S. PATENT DOCUMENTS

2,419,042	A	4/1947	Todd	202/205
2,519,531	A	8/1950	Worn	230/95
2,562,753	A	7/1951	Trost	241/39
2,689,780	A	9/1954	Rice	23/106
3,001,402	A	9/1961	Koblin	73/421.5
3,042,511	A	7/1962	Reding, Jr.	
3,067,025	A	12/1962	Chisholm	75/84.5
3,145,287	A	8/1964	Siebein et al.	
3,178,121	A	4/1965	Wallace, Jr.	241/5
3,179,782	A	4/1965	Matvay	
3,181,947	A	5/1965	Vordahl	
3,235,700	A	2/1966	Mondain-Monval et al.	
3,313,908	A	4/1967	Unger et al.	
3,387,110	A	6/1968	Wendler et al.	
3,401,465	A	9/1968	Larwill	34/57
3,450,926	A	6/1969	Kieman	313/231
3,457,788	A	7/1969	Miyajima	73/422
3,537,513	A	11/1970	Austin	165/70
3,552,653	A	1/1971	Inoue	
3,617,358	A	11/1971	Dittrich	
3,667,111	A	6/1972	Chartet	
3,741,001	A	6/1973	Fletcher et al.	73/28
3,752,172	A	8/1973	Cohen et al.	137/12
3,761,360	A	9/1973	Auvil et al.	
3,774,442	A	11/1973	Gustavsson	73/28
3,804,034	A	4/1974	Stiglich, Jr.	
3,830,756	A	8/1974	Sanchez et al.	252/462
3,871,448	A	3/1975	Vann et al.	
3,892,882	A	7/1975	Guest et al.	427/34
3,914,573	A	10/1975	Muehlberger	219/76
3,959,094	A	5/1976	Steinberg	
3,959,420	A	5/1976	Geddes et al.	261/112
3,969,482	A	7/1976	Teller	
4,008,620	A	2/1977	Narato et al.	73/421.5 A
4,018,388	A	4/1977	Andrews	241/39
4,021,021	A	5/1977	Hall et al.	
4,127,760	A	11/1978	Meyer et al.	
4,139,497	A	2/1979	Castor et al.	252/470
4,146,654	A	3/1979	Guyonnet	
4,157,316	A	6/1979	Thompson et al.	252/462
4,171,288	A	10/1979	Keith et al.	252/462
4,174,298	A	11/1979	Antos	252/441
4,189,925	A	2/1980	Long	
4,227,928	A	10/1980	Wang	
4,248,387	A	2/1981	Andrews	241/5
4,253,917	A	3/1981	Wang	
4,260,649	A	4/1981	Dension et al.	
4,284,609	A	8/1981	deVries	423/242
4,315,874	A	2/1982	Ushida et al.	
4,326,492	A	4/1982	Leibrand, Sr. et al.	
4,344,779	A	8/1982	Isserlis	
4,369,167	A	1/1983	Weir	
4,388,274	A	6/1983	Rourke et al.	422/177
4,419,331	A	12/1983	Montalvo	
4,431,750	A	2/1984	McGinnis et al.	502/329
4,436,075	A	3/1984	Campbell et al.	123/557
4,440,733	A	4/1984	Lawson et al.	
4,458,138	A	7/1984	Adrian et al.	
4,459,327	A	7/1984	Wang	
4,505,945	A	3/1985	Dubust et al.	
4,506,136	A	3/1985	Smyth et al.	
4,513,149	A	4/1985	Gray et al.	564/449
4,523,981	A	6/1985	Ang et al.	
4,545,872	A	10/1985	Sammells et al.	
RE32,244	E	9/1986	Andersen	
4,609,441	A	9/1986	Frese, Jr. et al.	
4,610,857	A	9/1986	Ogawa et al.	
4,616,779	A	10/1986	Serrano et al.	
4,723,589	A	2/1988	Iyer et al.	
4,731,517	A	3/1988	Cheney	
4,751,021	A	6/1988	Mollon et al.	
4,764,283	A	8/1988	Ashbrook et al.	210/695
4,765,805	A	8/1988	Wahl et al.	
4,780,591	A	10/1988	Bernecki et al.	
4,824,624	A	4/1989	Palicka et al.	264/67
4,836,084	A	6/1989	Vogelesang et al.	
4,855,505	A	8/1989	Koll	564/398
4,866,240	A	9/1989	Webber	219/121.47
4,877,937	A	10/1989	Müller	
4,885,038	A	12/1989	Anderson et al.	
4,921,586	A	5/1990	Molter	
4,970,364	A	11/1990	Müller	
4,982,050	A	1/1991	Gammie et al.	
4,983,555	A	1/1991	Roy et al.	501/120
4,987,033	A	1/1991	Abkowitz et al.	428/469
5,006,163	A	4/1991	Benn et al.	
5,015,863	A	5/1991	Takeshima et al.	
5,041,713	A	8/1991	Weidman	219/121.51
5,043,548	A	8/1991	Whitney et al.	219/121.84
5,070,064	A	12/1991	Hsu et al.	
5,073,193	A	12/1991	Chaklader et al.	75/346
5,133,190	A	7/1992	Abdelmalek	
5,151,296	A	9/1992	Tokunaga	
5,157,007	A	10/1992	Domesle et al.	502/66
5,192,130	A	3/1993	Endo et al.	
5,217,746	A	6/1993	Lenling et al.	
5,225,656	A	7/1993	Frind	
5,230,844	A	7/1993	Macaire et al.	
5,233,153	A	8/1993	Coats	
5,269,848	A	12/1993	Nakagawa	
5,294,242	A	3/1994	Zurecki et al.	
5,330,945	A	7/1994	Beckmeyer et al.	
5,338,716	A	8/1994	Triplett et al.	
5,369,241	A	11/1994	Taylor et al.	219/121.47
5,371,049	A	12/1994	Moffett et al.	501/89
5,372,629	A	12/1994	Anderson et al.	75/332
5,392,797	A	2/1995	Welch	134/108
5,436,080	A	7/1995	Inoue et al.	
5,439,865	A	8/1995	Abe et al.	502/333
5,442,153	A	8/1995	Marantz et al.	219/121.47
5,452,854	A	9/1995	Keller	
5,460,701	A	10/1995	Parker et al.	
5,464,458	A	11/1995	Yamamoto	
5,485,941	A	1/1996	Guyomard et al.	222/1
5,486,675	A	1/1996	Taylor et al.	
5,534,149	A	7/1996	Birkenbeil et al.	210/636
5,534,270	A	7/1996	De Castro	
5,543,173	A	8/1996	Horn, Jr. et al.	
5,553,507	A	9/1996	Basch et al.	73/863.01
5,558,771	A	9/1996	Hagen et al.	
5,562,966	A	10/1996	Clarke et al.	
5,582,807	A	12/1996	Liao et al.	
5,596,973	A	1/1997	Grice	
5,611,896	A	3/1997	Swanepoel et al.	204/169
5,630,322	A	5/1997	Heilmann et al.	62/95
5,714,644	A	2/1998	Irgang et al.	
5,723,027	A	3/1998	Serole	
5,723,187	A	3/1998	Popoola et al.	
5,726,414	A	3/1998	Kitahashi et al.	
5,733,662	A	3/1998	Bogachek	

(56) **References Cited**

U.S. PATENT DOCUMENTS

5,749,938 A 5/1998 Coombs 75/332
5,776,359 A 7/1998 Schultz et al. 252/62.51
5,788,738 A 8/1998 Pirzada et al. 75/331
5,804,155 A 9/1998 Farrauto et al.
5,811,187 A 9/1998 Anderson et al. 428/403
5,837,959 A 11/1998 Muehlberger et al. ... 219/121.47
5,851,507 A 12/1998 Pirzada et al. 423/659
5,853,815 A 12/1998 Muehlberger 427/446
5,858,470 A 1/1999 Bernecki et al.
5,884,473 A 3/1999 Noda et al.
5,905,000 A 5/1999 Yadav et al. 429/33
5,928,806 A 7/1999 Olah et al.
5,935,293 A 8/1999 Detering et al. 75/10.29
5,973,289 A 10/1999 Read et al.
5,989,648 A 11/1999 Phillips 427/456
5,993,967 A 11/1999 Brotzman, Jr. et al. 428/407
5,993,988 A 11/1999 Ohara et al. 429/40
6,004,620 A 12/1999 Camm
6,012,647 A 1/2000 Ruta et al. 239/132.1
6,033,781 A 3/2000 Brotzman, Jr. et al. 428/405
6,045,765 A 4/2000 Nakatsuji et al.
6,059,853 A 5/2000 Coombs 75/332
6,066,587 A 5/2000 Kurokawa et al.
6,084,197 A 7/2000 Fusaro, Jr.
6,093,306 A 7/2000 Hanrahan et al.
6,093,378 A 7/2000 Deeba et al.
6,102,106 A 8/2000 Manning et al. 165/76
6,117,376 A 9/2000 Merkel
6,140,539 A 10/2000 Sander et al.
6,168,694 B1 1/2001 Huang et al.
6,190,627 B1 2/2001 Hoke et al.
6,213,049 B1 4/2001 Yang 118/723
6,214,195 B1 4/2001 Yadav et al. 205/334
6,228,904 B1 5/2001 Yadav et al. 523/210
6,254,940 B1 7/2001 Pratsinis et al. 427/562
6,261,484 B1 7/2001 Phillips et al. 264/5
6,267,864 B1 7/2001 Yadav et al. 205/341
6,322,756 B1 11/2001 Arno et al.
6,342,465 B1 1/2002 Klein et al. 502/339
6,344,271 B1 2/2002 Yadav et al. 428/402
6,362,449 B1 3/2002 Hadidi et al.
6,379,419 B1 4/2002 Celik et al. 75/346
6,387,560 B1 5/2002 Yadav et al. 429/45
6,395,214 B1 5/2002 Kear et al. 264/434
6,398,843 B1 6/2002 Tarrant 75/249
6,399,030 B1 6/2002 Nolan
6,409,851 B1 6/2002 Sethuram et al. 148/565
6,413,781 B1 7/2002 Geis et al. 436/178
6,416,818 B1 7/2002 Aikens et al. 427/383.1
RE37,853 E 9/2002 Detering et al. 75/10.19
6,444,009 B1 9/2002 Liu et al. 75/332
6,475,951 B1 11/2002 Domesle et al.
6,488,904 B1 12/2002 Cox et al.
6,506,995 B1 1/2003 Fusaro, Jr. et al.
6,517,800 B1 2/2003 Cheng et al. 423/447.1
6,524,662 B2 2/2003 Jang et al. 427/535
6,531,704 B2 3/2003 Yadav et al. 250/493.1
6,548,445 B1 4/2003 Buysch et al. 502/230
6,554,609 B2 4/2003 Yadav et al. 432/9
6,562,304 B1 5/2003 Mizrahi
6,562,495 B2 5/2003 Yadav et al. 429/12
6,569,393 B1 5/2003 Hoke et al.
6,569,397 B1 5/2003 Yadav et al. 423/345
6,569,518 B2 5/2003 Yadav et al. 428/323
6,572,672 B2 6/2003 Yadav et al. 75/343
6,579,446 B1 6/2003 Teran et al.
6,596,187 B2 7/2003 Coll et al. 216/56
6,603,038 B1 8/2003 Hagemeyer et al. 560/241.1
6,607,821 B2 8/2003 Yadav et al. 428/323
6,610,355 B2 8/2003 Yadav et al. 427/115
6,623,559 B2 9/2003 Huang 117/87
6,635,357 B2 10/2003 Moxson et al. 428/548
6,641,775 B2 11/2003 Vigliotti et al. 264/618
6,652,822 B2 11/2003 Phillips et al. 423/290
6,652,967 B2 11/2003 Yadav et al. 428/403
6,669,823 B1 12/2003 Sarkas et al. 204/164
6,682,002 B2 1/2004 Kyotani 239/318
6,689,192 B1 2/2004 Phillips et al. 75/342
6,699,398 B1 3/2004 Kim 216/55
6,706,097 B2 3/2004 Zornes 96/153
6,706,660 B2 3/2004 Park
6,710,207 B2 3/2004 Bogan, Jr. et al. 562/549
6,713,176 B2 3/2004 Yadav et al. 428/402
6,716,525 B1 4/2004 Yadav et al. 428/402
6,744,006 B2 6/2004 Johnson et al.
6,746,791 B2 6/2004 Yadav et al. 429/30
6,772,584 B2 8/2004 Chun et al. 60/275
6,786,950 B2 9/2004 Yadav et al. 75/346
6,813,931 B2 11/2004 Yadav et al. 73/31.05
6,817,388 B2 11/2004 Tsangaris et al. 141/82
6,832,735 B2 12/2004 Yadav et al. 241/16
6,838,072 B1 1/2005 Kong et al. 423/594.2
6,841,509 B1 1/2005 Hwang et al.
6,855,410 B2 2/2005 Buckley
6,855,426 B2 2/2005 Yadav 428/403
6,855,749 B1 2/2005 Yadav et al. 523/105
6,858,170 B2 2/2005 Van Thillo et al.
6,886,545 B1 5/2005 Holm 123/568.21
6,891,319 B2 * 5/2005 Dean et al. 313/309
6,896,958 B1 5/2005 Cayton et al. 428/323
6,902,699 B2 6/2005 Fritzemeier et al. 419/38
6,916,872 B2 7/2005 Yadav et al. 524/430
6,919,065 B2 7/2005 Zhou et al.
6,919,527 B2 7/2005 Boulos et al. 219/121.52
6,933,331 B2 8/2005 Yadav et al. 523/210
6,972,115 B1 12/2005 Ballard
6,986,877 B2 1/2006 Takikawa et al. 423/447.3
6,994,837 B2 2/2006 Boulos et al. 423/613
7,007,872 B2 3/2006 Yadav et al. 241/1
7,022,305 B2 4/2006 Drumm et al.
7,052,777 B2 5/2006 Brotzman, Jr. et al. 428/570
7,073,559 B2 7/2006 O'Larey et al. 164/76.1
7,074,364 B2 7/2006 Jähn et al.
7,081,267 B2 7/2006 Yadav 427/115
7,101,819 B2 9/2006 Rosenflanz et al. 501/10
7,147,544 B2 12/2006 Rosenflanz 451/28
7,147,894 B2 12/2006 Zhou et al. 427/256
7,166,198 B2 1/2007 Van Der Walt et al. 204/165
7,166,663 B2 1/2007 Cayton et al. 524/430
7,172,649 B2 2/2007 Conrad et al. 106/35
7,172,790 B2 2/2007 Koulik et al. 427/212
7,178,747 B2 2/2007 Yadav et al. 241/23
7,208,126 B2 4/2007 Musick et al. 423/69
7,211,236 B2 5/2007 Stark et al. 423/592.1
7,217,407 B2 5/2007 Zhang 423/610
7,220,398 B2 5/2007 Sutorik et al. 423/593.1
7,255,498 B2 8/2007 Bush et al.
7,265,076 B2 9/2007 Taguchi et al.
7,282,167 B2 10/2007 Carpenter
7,307,195 B2 12/2007 Polverejan et al. 585/443
7,323,655 B2 1/2008 Kim 219/121.43
7,384,447 B2 6/2008 Kodas et al. 75/332
7,402,899 B1 7/2008 Whiting et al.
7,417,008 B2 8/2008 Richards et al. 502/306
7,494,527 B2 2/2009 Jurewicz et al. 75/346
7,507,495 B2 3/2009 Wang et al.
7,517,826 B2 * 4/2009 Fujdala et al. 502/60
7,534,738 B2 * 5/2009 Fujdala et al. 502/74
7,541,012 B2 6/2009 Yeung et al. 423/245.1
7,541,310 B2 6/2009 Espinoza et al.
7,557,324 B2 7/2009 Nylen et al.
7,572,315 B2 8/2009 Boulos et al. 75/336
7,576,029 B2 8/2009 Saito et al.
7,576,031 B2 8/2009 Beutel et al.
7,604,843 B1 10/2009 Robinson et al.
7,611,686 B2 11/2009 Alekseeva et al. 423/276
7,615,097 B2 11/2009 McKechnie et al. 75/346
7,618,919 B2 11/2009 Shimazu et al.
7,622,693 B2 11/2009 Foret 219/121.43
7,632,775 B2 12/2009 Zhou et al.
7,635,218 B1 12/2009 Lott
7,674,744 B2 3/2010 Shiratori et al.
7,678,419 B2 3/2010 Kevwitch et al.
7,704,369 B2 4/2010 Olah et al.

(56) **References Cited**

U.S. PATENT DOCUMENTS

7,709,411 B2 5/2010 Zhou et al.
7,709,414 B2 * 5/2010 Fujdala et al. 502/326
7,745,367 B2 * 6/2010 Fujdala et al. 502/60
7,750,265 B2 7/2010 Belashchenko et al.
7,759,279 B2 7/2010 Shiratori et al.
7,759,281 B2 7/2010 Kezuka et al.
7,803,210 B2 9/2010 Sekine et al. 75/334
7,842,515 B2 * 11/2010 Zou et al. 436/524
7,851,405 B2 12/2010 Wakamatsu et al.
7,874,239 B2 1/2011 Howland
7,875,573 B2 1/2011 Beutel et al.
7,897,127 B2 3/2011 Layman et al.
7,902,104 B2 3/2011 Kalck
7,905,942 B1 3/2011 Layman
7,935,655 B2 5/2011 Tolmachev
8,051,724 B1 11/2011 Layman et al.
8,076,258 B1 12/2011 Biberger
8,080,494 B2 12/2011 Yasuda et al.
8,089,495 B2 1/2012 Keller
8,129,654 B2 3/2012 Lee et al.
8,142,619 B2 3/2012 Layman et al.
8,168,561 B2 5/2012 Virkar
8,173,572 B2 5/2012 Feaviour
8,211,392 B2 7/2012 Grubert et al.
8,258,070 B2 * 9/2012 Fujdala et al. 502/60
8,278,240 B2 10/2012 Tange et al.
8,294,060 B2 10/2012 Mohanty et al.
8,309,489 B2 * 11/2012 Cuenya et al. 502/339
8,349,761 B2 1/2013 Xia et al.
8,404,611 B2 3/2013 Nakamura et al.
8,524,631 B2 9/2013 Biberger
8,557,727 B2 10/2013 Yin et al.
8,574,408 B2 11/2013 Layman
8,652,992 B2 2/2014 Yin et al.
8,669,202 B2 3/2014 Van Den Hoek et al.
8,679,433 B2 3/2014 Yin et al.
2001/0004009 A1 6/2001 MacKelvie
2001/0042802 A1 11/2001 Youds 241/5
2001/0055554 A1 12/2001 Hoke et al.
2002/0018815 A1 2/2002 Sievers et al. 424/489
2002/0068026 A1 6/2002 Murrell et al. 422/211
2002/0071800 A1 6/2002 Hoke et al.
2002/0079620 A1 6/2002 DuBuis et al. 264/328.14
2002/0100751 A1 8/2002 Carr
2002/0102674 A1 8/2002 Anderson 435/174
2002/0131914 A1 * 9/2002 Sung 422/177
2002/0143417 A1 10/2002 Ito et al. 700/95
2002/0168466 A1 11/2002 Tapphorn et al.
2002/0182735 A1 12/2002 Kibby et al. 436/37
2002/0183191 A1 12/2002 Faber et al.
2002/0192129 A1 12/2002 Shamouilian et al.
2003/0036786 A1 2/2003 Duren et al. 607/96
2003/0042232 A1 3/2003 Shimazu 219/121.47
2003/0047617 A1 3/2003 Shanmugham et al.
2003/0066800 A1 4/2003 Saim et al. 264/5
2003/0085663 A1 5/2003 Horsky
2003/0102099 A1 6/2003 Yadav et al.
2003/0108459 A1 6/2003 Wu et al. 422/186.04
2003/0110931 A1 6/2003 Aghajanian et al.
2003/0129098 A1 7/2003 Endo et al.
2003/0139288 A1 7/2003 Cai et al. 502/303
2003/0143153 A1 7/2003 Boulos et al.
2003/0172772 A1 9/2003 Sethuram et al. 501/87
2003/0223546 A1 12/2003 McGregor et al. 378/143
2004/0009118 A1 1/2004 Phillips et al. 423/592.1
2004/0023302 A1 2/2004 Archibald et al. 435/7.1
2004/0023453 A1 2/2004 Xu et al. 257/369
2004/0077494 A1 4/2004 LaBarge et al. 502/303
2004/0103751 A1 6/2004 Joseph et al. 75/10.19
2004/0109523 A1 6/2004 Singh et al.
2004/0119064 A1 6/2004 Narayan et al.
2004/0127586 A1 7/2004 Jin et al. 518/715
2004/0129222 A1 7/2004 Nylen et al.
2004/0166036 A1 8/2004 Chen et al.
2004/0167009 A1 8/2004 Kuntz et al. 501/95.2
2004/0176246 A1 9/2004 Shirk et al. 502/439
2004/0208805 A1 10/2004 Fincke et al.
2004/0213998 A1 10/2004 Hearley et al. 428/402
2004/0235657 A1 11/2004 Xiao et al.
2004/0238345 A1 12/2004 Koulik et al.
2004/0251017 A1 12/2004 Pillion et al. 165/289
2004/0251241 A1 12/2004 Blutke et al.
2005/0000321 A1 1/2005 O'Larey et al. 75/952
2005/0000950 A1 1/2005 Schroder et al. 219/121.59
2005/0066805 A1 3/2005 Park et al.
2005/0070431 A1 * 3/2005 Alvin et al. 502/439
2005/0077034 A1 4/2005 King 165/163
2005/0097988 A1 5/2005 Kodas et al. 75/332
2005/0106865 A1 5/2005 Chung et al.
2005/0133121 A1 6/2005 Subramanian et al.
2005/0153069 A1 7/2005 Tapphorn et al.
2005/0163673 A1 7/2005 Johnson et al.
2005/0199739 A1 9/2005 Kuroda et al. 239/13
2005/0211018 A1 9/2005 Jurewicz et al.
2005/0220695 A1 10/2005 Abatzoglou et al. 423/445
2005/0227864 A1 10/2005 Sutorik et al.
2005/0233380 A1 10/2005 Pesiri et al. 435/7.1
2005/0240069 A1 10/2005 Polverejan et al. 585/444
2005/0258766 A1 11/2005 Kim 315/111.21
2005/0274646 A1 12/2005 Lawson et al.
2005/0275143 A1 12/2005 Toth
2006/0043651 A1 3/2006 Yamamoto et al.
2006/0051505 A1 3/2006 Kortshagen et al. 427/212
2006/0068989 A1 3/2006 Ninomiya et al. 502/339
2006/0094595 A1 5/2006 Labarge 502/325
2006/0096393 A1 5/2006 Pesiri 73/863.21
2006/0105910 A1 5/2006 Zhou et al. 502/338
2006/0108332 A1 5/2006 Belashchenko 219/121.47
2006/0153728 A1 7/2006 Schoenung et al. 419/32
2006/0153765 A1 7/2006 Pham-Huu et al. 423/345
2006/0159596 A1 7/2006 De La Veaux et al. 422/151
2006/0166809 A1 7/2006 Malek et al.
2006/0211569 A1 9/2006 Dang et al.
2006/0213326 A1 9/2006 Gollob et al.
2006/0222780 A1 10/2006 Gurevich et al.
2006/0231525 A1 10/2006 Asakawa et al. 216/56
2007/0044513 A1 3/2007 Kear et al.
2007/0048206 A1 3/2007 Hung et al. 423/335
2007/0049484 A1 3/2007 Kear et al.
2007/0063364 A1 3/2007 Hsiao et al. 264/5
2007/0084308 A1 4/2007 Nakamura et al. 75/346
2007/0084834 A1 4/2007 Hanus et al. 219/121.5
2007/0087934 A1 4/2007 Martens et al. 502/214
2007/0092768 A1 4/2007 Lee et al.
2007/0153390 A1 7/2007 Nakamura et al.
2007/0161506 A1 7/2007 Saito et al.
2007/0163385 A1 7/2007 Takahashi et al.
2007/0173403 A1 7/2007 Koike et al. 502/300
2007/0178673 A1 8/2007 Gole et al.
2007/0221404 A1 9/2007 Das et al.
2007/0253874 A1 11/2007 Foret 422/186.07
2007/0266825 A1 11/2007 Ripley et al.
2007/0292321 A1 12/2007 Plischke et al. 422/198
2008/0006954 A1 1/2008 Yubuta et al.
2008/0026041 A1 1/2008 Tepper et al.
2008/0031806 A1 2/2008 Gavenonis et al. 423/608
2008/0038578 A1 2/2008 Li
2008/0045405 A1 2/2008 Beutel et al.
2008/0047261 A1 2/2008 Han et al.
2008/0057212 A1 3/2008 Dorier et al.
2008/0064769 A1 3/2008 Sato et al.
2008/0104735 A1 5/2008 Howland
2008/0105083 A1 5/2008 Nakamura et al. 75/255
2008/0116178 A1 5/2008 Weidman 219/121.47
2008/0125308 A1 5/2008 Fujdala et al.
2008/0125313 A1 * 5/2008 Fujdala et al. 502/330
2008/0138651 A1 6/2008 Doi et al.
2008/0175936 A1 7/2008 Tokita et al.
2008/0187714 A1 8/2008 Wakamatsu et al.
2008/0206562 A1 8/2008 Stucky et al.
2008/0207858 A1 8/2008 Kowaleski et al. 526/176
2008/0248704 A1 10/2008 Mathis et al.
2008/0274344 A1 11/2008 Vieth et al. 428/304.4
2008/0277092 A1 11/2008 Layman et al. 165/281

(56) **References Cited**

U.S. PATENT DOCUMENTS

2008/0277266	A1	11/2008	Layman et al.	204/157.15
2008/0277267	A1	11/2008	Biberger et al.	204/157.15
2008/0277268	A1	11/2008	Layman	204/164
2008/0277269	A1	11/2008	Layman et al.	423/215.5
2008/0277270	A1	11/2008	Biberger	204/164
2008/0277271	A1	11/2008	Layman et al.	422/130
2008/0280049	A1	11/2008	Kevwitch et al.	427/243
2008/0280751	A1	11/2008	Harutyunyan et al.	
2008/0280756	A1	11/2008	Biberger	502/232
2008/0283411	A1	11/2008	Eastman et al.	
2008/0283498	A1	11/2008	Yamazaki	
2008/0307960	A1	12/2008	Hendrickson et al.	
2009/0010801	A1	1/2009	Murphy et al.	422/4
2009/0054230	A1	2/2009	Veeraraghavan et al.	
2009/0081092	A1	3/2009	Yang et al.	
2009/0088585	A1	4/2009	Schammel et al.	562/409
2009/0092887	A1	4/2009	McGrath et al.	
2009/0098402	A1	4/2009	Kang et al.	
2009/0114568	A1	5/2009	Trevino et al.	208/139
2009/0162991	A1	6/2009	Beneyton et al.	
2009/0168506	A1	7/2009	Han et al.	
2009/0170242	A1	7/2009	Lin et al.	
2009/0181474	A1	7/2009	Nagai	
2009/0200180	A1	8/2009	Capote et al.	
2009/0208367	A1	8/2009	Calio et al.	
2009/0209408	A1	8/2009	Kitamura et al.	
2009/0223410	A1	9/2009	Jun et al.	
2009/0253037	A1	10/2009	Park et al.	
2009/0274897	A1	11/2009	Kaner et al.	
2009/0274903	A1	11/2009	Addiego	428/337
2009/0286899	A1	11/2009	Hofmann et al.	522/99
2009/0324468	A1	12/2009	Golden et al.	
2010/0050868	A1	3/2010	Kuznicki et al.	
2010/0089002	A1	4/2010	Merkel	
2010/0092358	A1	4/2010	Koegel et al.	
2010/0124514	A1	5/2010	Chelluri et al.	
2010/0166629	A1	7/2010	Deeba	
2010/0180581	A1	7/2010	Grubert et al.	
2010/0180582	A1	7/2010	Mueller-Stach et al.	
2010/0186375	A1	7/2010	Kazi et al.	
2010/0240525	A1	9/2010	Golden et al.	
2010/0275781	A1	11/2010	Tsangaris	
2010/0323118	A1	12/2010	Mohanty et al.	
2011/0006463	A1	1/2011	Layman	
2011/0030346	A1	2/2011	Neubauer et al.	
2011/0049045	A1	3/2011	Hurt et al.	
2011/0052467	A1	3/2011	Chase et al.	
2011/0143041	A1	6/2011	Layman et al.	
2011/0143915	A1	6/2011	Yin et al.	
2011/0143916	A1	6/2011	Leamon	
2011/0143926	A1	6/2011	Yin et al.	
2011/0143930	A1	6/2011	Yin et al.	
2011/0143933	A1	6/2011	Yin et al.	
2011/0144382	A1	6/2011	Yin et al.	
2011/0152550	A1	6/2011	Grey et al.	
2011/0158871	A1	6/2011	Arnold et al.	
2011/0174604	A1	7/2011	Duesel et al.	
2011/0243808	A1	10/2011	Fossey et al.	
2011/0245073	A1	10/2011	Oljaca et al.	
2011/0247336	A9	10/2011	Farsad et al.	
2011/0305612	A1	12/2011	Müller-Stach et al.	
2012/0023909	A1	2/2012	Lambert et al.	
2012/0045373	A1	2/2012	Biberger	
2012/0063963	A1	3/2012	Watanabe et al.	
2012/0097033	A1	4/2012	Arnold et al.	
2012/0122660	A1	5/2012	Andersen et al.	
2012/0124974	A1	5/2012	Li et al.	
2012/0171098	A1	7/2012	Hung et al.	
2012/0214666	A1	8/2012	van den Hoek et al.	
2012/0308467	A1	12/2012	Carpenter et al.	
2012/0313269	A1	12/2012	Kear et al.	
2013/0079216	A1	3/2013	Biberger et al.	
2013/0213018	A1	8/2013	Yin et al.	
2013/0280528	A1	10/2013	Biberger	
2013/0281288	A1	10/2013	Biberger et al.	
2013/0316896	A1	11/2013	Biberger	
2013/0331257	A1	12/2013	Barcikowski et al.	
2013/0345047	A1	12/2013	Biberger et al.	
2014/0018230	A1	1/2014	Yin et al.	
2014/0120355	A1	5/2014	Biberger	
2014/0128245	A1	5/2014	Yin et al.	
2014/0140909	A1	5/2014	Qi et al.	
2014/0148331	A1	5/2014	Biberger et al.	
2014/0209451	A1	7/2014	Biberger et al.	
2014/0228201	A1	8/2014	Mendoza Gómez et al.	
2014/0243187	A1	8/2014	Yin et al.	
2014/0249021	A1	9/2014	van den Hoek et al.	
2014/0252270	A1	9/2014	Lehman, Jr.	

FOREIGN PATENT DOCUMENTS

EP	0 385 742	A1	9/1990	
EP	1 134 302	A1	9/2001	
EP	1 256 378	A2	11/2002	
EP	1 619 168	A1	1/2006	
EP	1 790 612	A1	5/2007	
EP	1 955 765	A1	8/2008	
GB	1 307 941	A	2/1973	
JP	56-146804		11/1981	B22F 9/08
JP	61-086815	A	5/1986	
JP	62-102827	A	5/1987	
JP	63-214342	A	9/1988	
JP	1-164795	A	6/1989	
JP	05-228361	A	9/1993	
JP	05-324094	A	12/1993	
JP	6-93309	A	4/1994	
JP	6-135797	A	5/1994	
JP	6-272012	A	9/1994	
JP	H6-065772	U	9/1994	
JP	7031873	A	2/1995	B01J 19/08
JP	7-138020	A	5/1995	
JP	7-207381	A	8/1995	
JP	07-256116	A	10/1995	
JP	8-158033	A	6/1996	
JP	8-215576	A	8/1996	
JP	8-217420	A	8/1996	
JP	10-130810	A	5/1998	
JP	10-249198	A	9/1998	
JP	11-502760	A	3/1999	
JP	2000-220978	A	8/2000	
JP	2002-88486	A	3/2002	
JP	2002-241812	A	8/2002	
JP	2002-336688	A	11/2002	
JP	2003-126694	A	5/2003	
JP	2004-233007	A	8/2004	
JP	2004-249206	A	9/2004	
JP	2004-290730	A	10/2004	
JP	2005-503250	A	2/2005	
JP	2005-122621	A	5/2005	
JP	2005-218937	A	8/2005	
JP	2005-342615	A	12/2005	
JP	2006-001779	A	1/2006	
JP	2006-508885	A	3/2006	
JP	2006-87965	A	4/2006	
JP	2006-247446	A	9/2006	
JP	2006-260385	A	9/2006	
JP	2006-326554	A	12/2006	
JP	2007-29859	A	2/2007	
JP	2007-44585	A	2/2007	
JP	2007-46162	A	2/2007	
JP	2007-203129	A	8/2007	
SU	493241		3/1976	B01J 11/22
TW	200611449		4/2006	
TW	201023207		6/2010	
WO	WO-96/28577	A1	9/1996	
WO	WO 02/092503	A1	11/2002	C01B 21/064
WO	WO-03/094195	A1	11/2003	
WO	WO 2004/052778	A2	6/2004	C01B 21/064
WO	WO-2005/063390	A1	7/2005	
WO	WO 2006/079213	A1	8/2006	B01J 2/04
WO	WO-2006/096205	A2	9/2006	
WO	WO-2007/144447	A1	12/2007	
WO	WO-2008/092478	A1	8/2008	
WO	WO-2008/130451	A2	10/2008	

(56) **References Cited**

FOREIGN PATENT DOCUMENTS

WO	WO-2008/130451	A3	10/2008
WO	WO-2009/017479	A1	2/2009
WO	WO-2011/081833	A1	7/2011
WO	WO-2012/028695	A2	3/2012
WO	WO-2013/028575	A1	2/2013

OTHER PUBLICATIONS

Ji, Y. et al. (Nov. 2002) "Processing and Mechanical Properties of A12O3-5 vol.% Cr Nanocomposites," Journal of the European Ceramic Society 22(12):1927-1936.
"Platinum Group Metals: Annual Review 1996" (Oct. 1997). Engineering and Mining Journal, p. 63.
Rahaman, R. A. et al. (1995). "Synthesis of Powders," in Ceramic Processing and Sintering. Marcel Decker, Inc., New York, pp. 71-77.
Subramanian, S. et al. (1991). "Structure and Activity of Composite Oxide Supported Platinum-Iridium Catalysts," Applied Catalysts 74: 65-81.
Ünal, N. et al. (Nov. 2011). "Influence of WC Particles on the Microstructural and Mechanical Properties of 3 mol% Y2O3 Stabilized ZrO2 Matrix Composites Produced by Hot Pressing," Journal of the European Ceramic Society (31)13: 2267-2275.
U.S. Appl. No. 13/589,024, filed Aug. 17, 2012, for Yin et al.
U.S. Appl. No. 13/801,726, filed Mar. 13, 2013, for Qi et al.
Ahmad, K. et al. (2008). "Hybrid Nanocomposites: A New Route Towards Tougher Alumina Ceramics," *Composites Science and Technology* 68: 1321-1327.
Babin, A. et al. (1985). "Solvents Used in the Arts," *Center for Safety in the Arts*: 16 pages.
Chaim, R. et al. (2009). "Densification of Nanocrystalline Y_2O_3 Ceramic Powder by Spark Plasma Sintering," *Journal of European Ceramic Society* 29: 91-98.
Chau, J. K. H. et al. (2005). "Microwave Plasma Synthesis of Silver Nanopowders," *Materials Letters* 59: 905-908.
Chen, W.-J. et al. (Mar. 18, 2008). "Functional Fe_3O_4/TiO_2 Core/Shell Magnetic Nanoparticles as Photokilling Agents for Pathogenic Bacteria," *Small* 4(4): 485-491.
Das, N. et al. (2001). "Influence of the Metal Function in the "One-Pot" Synthesis of 4-Methyl-2-Pentanone (Methyl Isobutyl Ketone) from Acetone Over Palladium Supported on Mg(Al)O Mixed Oxides Catalysts," *Catalysis Letters* 71(3-4): 181-185.
Gangeri, M. et al. (2009). "Fe and Pt Carbon Nanotubes for the Electrocatalytic Conversion of Carbon Dioxide to Oxygenates," *Catalysis Today* 143: 57-63.
Ihlein, G. et al.(1998). "Ordered Porous Materials as Media for the Organization of Matter on the Nanoscale," *Applied Organometallic Chemistry* 12: 305-314.
Lakis, R. E. et al. (1995). "Alumina-Supported Pt—Rh Catalysts: I. Microstructural Characterization," *Journal of Catalysis* 154: 261-275.
Luo, J. et al. (2008). "Core/Shell Nanoparticles as Electrocatalysts for Fuel Cell Reactions," *Advanced Materials* 20: 4342-4347.
Mignard, D. et al. (2003). "Methanol Synthesis from Flue-Gas CO_2 and Renewable Electricity: A Feasibility Study," *International Journal of Hydrogen Energy* 28: 455-464.
Park, H.-Y. et al. (May 30, 2007). "Fabrication of Magnetic Core@Shell Fe Oxide@Au Nanoparticles for Interfacial Bioactivity and Bio-Separation," *Langmuir* 23: 9050-9056.
Park, N.-G. et al. (Feb. 17, 2004). "Morphological and Photoelectrochemical Characterization of Core-Shell Nanoparticle Films for Dye-Sensitized Solar Cells: Zn—O Type Shell on SnO_2 and TiO_2 Cores," *Langmuir* 20: 4246-4253.
"Plasma Spray and Wire Flame Spray Product Group," located at http://www.processmaterials.com/spray.html, published by Process Materials, Inc., last accessed Aug. 5, 2013, 2 pages.
Schimpf, S. et al. (2002). "Supported Gold Nanoparticles: In-Depth Catalyst Characterization and Application in Hydrogenation and Oxidation Reactions," *Catalysis Today* 2592: 1-16.
Viswanathan, V. et al. (2006). "Challenges and Advances in Nanocomposite Processing Techniques," *Materials Science and Engineering* R 54: 121-285.
Wan, J. et al. (2005). "Spark Plasma Sintering of Silicon Nitride/Silicon Carbide Nanocomposites with Reduced Additive Amounts," *Scripta Materialia* 53: 663-667.
Bateman, James E. et al., "Alkylation of Porous Silicon by Direct Reaction with Alkenes and Alkynes," Angew. Chem Int. Ed., Dec. 17, 1998, 37, No. 19, pp. 2683-2685.
Langner, Alexander et al., "Controlled Silicon Surface Functionalization by Alkene Hydrosilylation," J. Am. Chem. Soc., Aug. 25, 2005, 127, pp. 12798-12799.
Liu, Shu-Man et al., "Enhanced Photoluminescence from Si Nano-organosols by Functionalization with Alkenes and Their Size Evolution," Chem. Mater., Jan. 13, 2006, 18,pp. 637-642.
Fojtik, Anton, "Surface Chemistry of Luminescent Colloidal Silicon Nanoparticles," J. Phys. Chem. B., Jan. 13, 2006, pp. 1994-1998.
Li, Dejin et al., "Environmentally Responsive "Hairy" Nanoparticles: Mixed Homopolymer Brushes on Silica Nanoparticles Synthesized by Living Radical Polymerization Techniques,"J.Am. Chem. Soc., Apr. 9, 2005, 127,pp. 6248-6256.
Neiner, Doinita, "Low-Temperature Solution Route to Macroscopic Amounts of Hydrogen Terminated Silicon Nanoparticles," J. Am. Chem. Soc., Aug. 5, 2006, 128, pp. 11016-11017.
Fojtik, Anton et al., "Luminescent Colloidal Silicon Particles,"Chemical Physics Letters 221, Apr. 29, 1994, pp. 363-367.
Netzer, Lucy et al., "A New Approach to Construction of Artificial Monolayer Assemblies," J. Am. Chem. Soc., 1983, 105, pp. 674-676.
Chen, H.-S. et al., "On the Photoluminescence of Si Nanoparticles," Mater. Phys. Mech. 4, Jul. 3, 2001, pp. 62-66.
Kwon, Young-Soon et al., "Passivation Process for Superfine Aluminum Powders Obtained by Electrical Explosion of Wires," Applied Surface Science 211, Apr. 30, 2003, pp. 57-67.
Liao, Ying-Chih et al., "Self-Assembly of Organic Monolayers on Aerosolized Silicon Nanoparticles," J.Am. Chem. Soc., Jun. 27, 2006, 128, pp. 9061-9065.
Zou, Jing et al., "Solution Synthesis of Ultrastable Luminescent Siloxane-Coated Silicon Nanoparticles," Nano Letters, Jun. 4, 2004, vol. 4, No. 7, pp. 1181-1186.
Tao, Yu-Tai, "Structural Comparison of Self-Assembled Monolayers of n-Alkanoic Acids on the surfaces of Silver, Copper, and Aluminum," J. Am. Chem. Soc., May 1993, 115, pp. 4350-4358.
Sailor, Michael et al., "Surface Chemistry of Luminescent Silicon Nanocrystallites," Adv. Mater, 1997, 9, No. 10, pp. 783-793.
Li, Xuegeng et al., "Surface Functionalization of Silicon Nanoparticles Produced by Laser-Driven Pyrolysis of Silane Followed by Hf—HNO3 Etching," Langmuir, May 25, 2004, pp. 4720-4727.
Carrot, Geraldine et al., "Surface-Initiated Ring-Opening Polymerization: A Versatile Method for Nanoparticle Ordering," Macromolecules, Sep. 17, 2002, 35, pp. 8400-8404.
Jouet, R. Jason et al., "Surface Passivation of Bare Aluminum Nanoparticles Using Perfluoroalkyl Carboxylic Acids," Chem. Mater., Jan. 25, 2005, 17, pp. 2987-2996.
Yoshida, Toyonobu, "The Future of Thermal Plasma Processing for Coating," Pure & Appl. Chem., vol. 66, No. 6, 1994, pp. 1223-1230.
Kim, Namyong Y. et al., "Thermal Derivatization of Porous Silicon with Alcohols," J. Am. Chem. Soc., Mar. 5, 1997, 119, pp. 2297-2298.
Hua, Fengjun et al., "Organically Capped Silicon Nanoparticles with Blue Photoluminescence Prepared by Hydrosilylation Followed by Oxidation," Langmuir, Mar. 2006, pp. 4363-4370.
Stiles, A.B., Catalyst Supports and Supported Catalysts, Manufacture of Carbon-Supported Metal Catalysts, pp. 125-132, published Jan. 1, 1987, Butterworth Publishers, 80 Montvale Ave., Stoneham, MA 02180.
U.S. Appl. No. 12/001,602, filed Dec. 11, 2007, for Biberger et al.
U.S. Appl. No. 12/001,643, filed Dec. 11, 2007, for Biberger et al.
U.S. Appl. No. 12/001,644, filed Dec. 11, 2007, for Biberger et al.
U.S. Appl. No. 12/151,830, filed May 8, 2008, for Biberger et al.
U.S. Appl. No. 12/152,084, filed May 9, 2008, for Biberger.
U.S. Appl. No. 12/152,111, filed May 9, 2008, for Biberger et al.
U.S. Appl. No. 12/474,081, filed May 28, 2009, for Biberger et al.

(56) **References Cited**

OTHER PUBLICATIONS

U.S. Appl. No. 12/943,909, filed Nov. 10, 2010, for Layman.
U.S. Appl. No. 12/954,813, filed Nov. 26, 2010, for Biberger.
U.S. Appl. No. 12/954,822, filed Nov. 26, 2010, for Biberger.
U.S. Appl. No. 12/961,030, filed Dec. 6, 2010, for Lehman.
U.S. Appl. No. 12/961,108, filed Dec. 6, 2010, for Lehman.
U.S. Appl. No. 12/961,200, filed Dec. 6, 2010, for Lehman.
U.S. Appl. No. 12/962,463, filed Dec. 7, 2010, for Leamon.
U.S. Appl. No. 12/962,523, filed Dec. 7, 2010, for Yin et al.
U.S. Appl. No. 12/962,533, filed Dec. 7, 2010, for Yin et al.
U.S. Appl. No. 12/968,235, filed Dec. 14, 2010, for Biberger.
U.S. Appl. No. 12/968,239, filed Dec. 14, 2010, for Biberger.
U.S. Appl. No. 12/968,241, filed Dec. 14, 2010, for Biberger.
U.S. Appl. No. 12/968,245, filed Dec. 14, 2010, for Biberger.
U.S. Appl. No. 12/968,248, filed Dec. 14, 2010, for Biberger.
U.S. Appl. No. 12/968,253, filed Dec. 14, 2010, for Biberger.
U.S. Appl. No. 12/969,087, filed Dec. 15, 2010, for Biberger.
U.S. Appl. No. 12/969,128, filed Dec. 15, 2010, for Biberger.
U.S. Appl. No. 12/969,306, filed Dec. 15, 2010, for Lehman et al.
U.S. Appl. No. 12/969,447, filed Dec. 15, 2010, for Biberger et al.
U.S. Appl. No. 12/969,457, filed Nov. 15, 2010, for Leamon et al.
U.S. Appl. No. 12/969,503, filed Nov. 15, 2010, for Leamon et al.
U.S. Appl. No. 13/028,693, filed Feb. 16, 2011, for Biberger.
U.S. Appl. No. 13/033,514, filed Feb. 23, 2011, for Biberger et al.
U.S. Appl. No. 13/291,983, filed Nov. 8, 2011, for Layman et al.
A. Gutsch et al., "Gas-Phase Production of Nanoparticles", Kona No. 20, 2002, pp. 24-37.
Dr. Heike Mühlenweg et al., "Gas-Phase Reactions - Open Up New Roads to Nanoproducts", Degussa ScienceNewsletter No. 08, 2004, pp. 12-16.
Coating Generation: Vaporization of Particles in Plasma Spraying and Splat Formation, M. Vardelle, A. Vardelle , K-I II, P. Fauchais, Universite de Limoges, 123 Avenue A. Thomas 87000, Limoges, F. , Pure & Chem, vol. 68, No. 5, pp. 1093-1099, 1996.
H. Konrad et al., "Nanostructured Cu-Bi Alloys Prepared by Co-Evaporation in a Continuous Gas Flow," NanoStructured Materials,. vol. 7, No. 6, 1996, pp. 605-610.
Kenvin et al. "Supported Catalysts Prepared from Mononuclear Copper Complexes: Catalytic Properties", Journal of Catalysis, pp. 81-92, (1992).
J. Heberlein, "New Approaches in Thermal Plasma Technology", Pure Appl. Chem., vol. 74, No. 3, 2002, pp. 327-335.
M. Vardelle et al., "Experimental Investigation of Powder Vaporization in Thermal Plasma Jets," Plasma Chemistry and Plasma Processing, vol. 11, No. 2, Jun. 1991, pp. 185-201.
National Aeronautics and Space Administration, "Enthalpy", http://www.grc.nasa.gov/WWW/K-12/airplane/enthalpy.html, Nov. 23, 2009, 1 page.
P. Fauchais et al. "Plasma Spray: Study of the Coating Generation," Ceramics International, Elsevier, Amsterdam, NL, vol. 22, No. 4, Jan. 1996, pp. 295-303.
P. Fauchais et al., "Les Depots Par Plasma Thermique," Revue Generale De L'Electricitie, RGE. Paris, FR, No. 2, Jan. 1993, pp. 7-12.
P. Fauchais et al, "La Projection Par Plasma: Une Revue," Annales De Physique, vol. 14, No. 3, Jun. 1989, pp. 261-310.
T. Yoshida, "The Future of Thermal Plasma Processing for Coating", Pure & Appl. Chem., vol. 66, No. 6, 1994 pp. 1223-1230.
HANet al., Deformation Mechanisms and Ductility of Nanostructured A1 Alloys, Mat. Res. Soc. Symp. Proc. vol. 821, Jan. 2004, Material Research Society, http://www.inrs.org/s_mrs/bin.asp?CID=2670&DOC=FILE.PDF., 6 pages.
Nagai, Yasutaka, et al. "Sintering Inhibition Mechanism of Platinum Supported on Ceria-based Oxide and Pt-oxide-support Interaction,"Joumal of al. 242 (2006), pp. 103-109, Jul. 3, 2006, Elsevier.
Derwent English Abstract for publication No.SU 193241 A, Application No. 1973SU1943286 filed on Jul. 2, 1973, on published Mar. 1, 1976, entitled Catalyst for Ammonia Synthesis Contains Oxides of Aluminum, Potassium, Calcium, Iron and Nickel Oxide for Increased Activity, 3 pgs.
Young, Lee W. Authorized Officer of the International Searching Authority, International Search report and the Written Opinion for Application PCT/US10/59760 mailed on Feb. 3, 2011, 16 pgs.

* cited by examiner

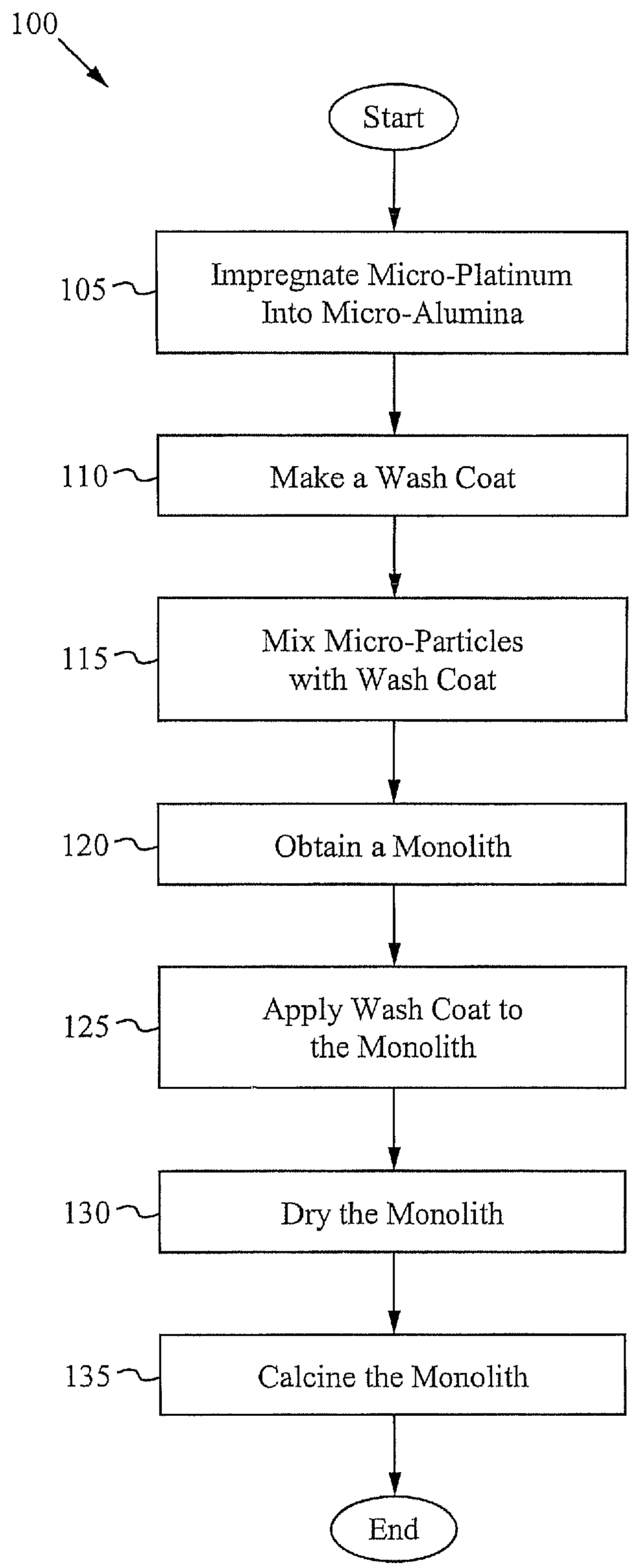

Fig. 1A (Prior Art)

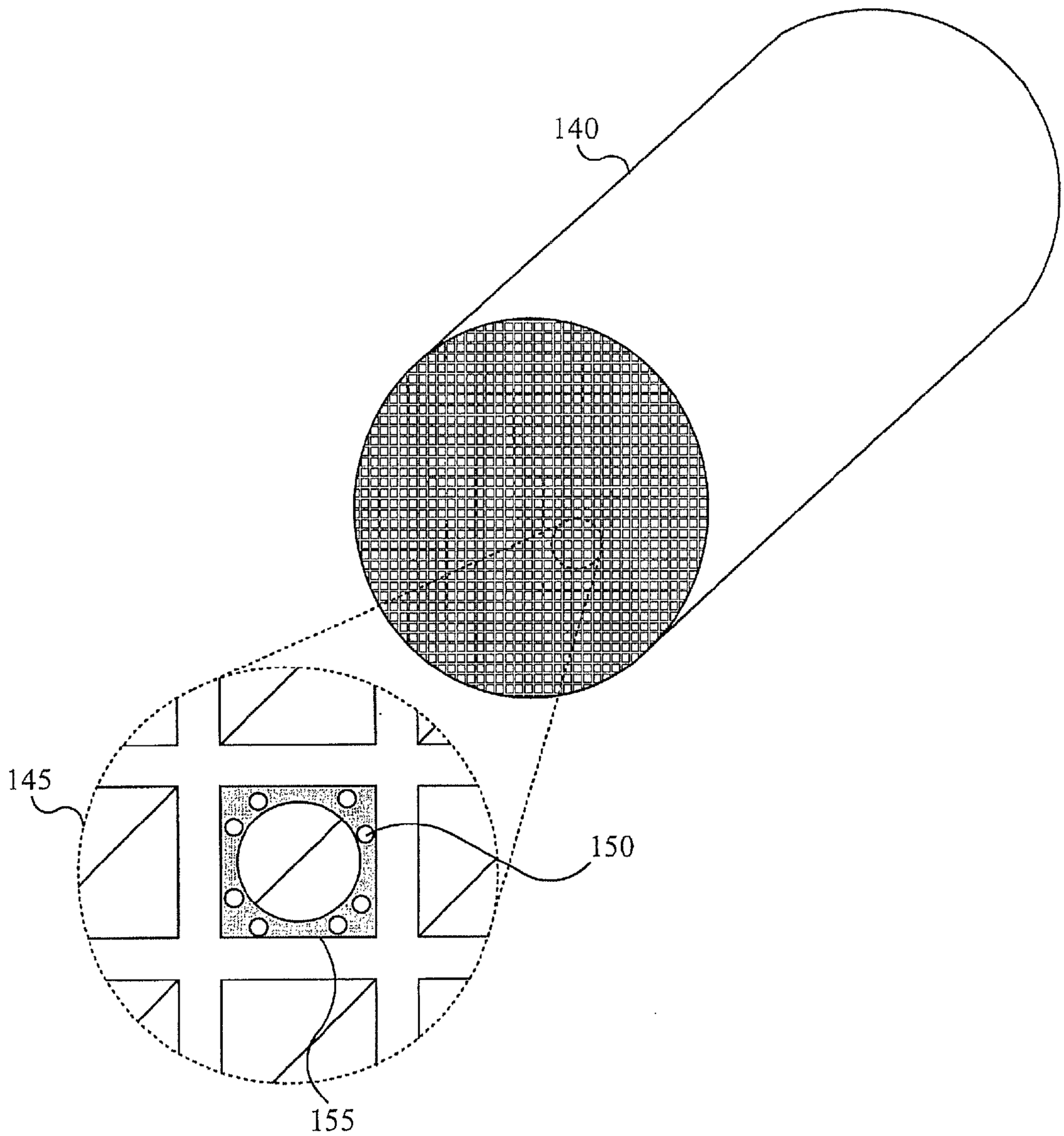

Fig. 1B (Prior Art)

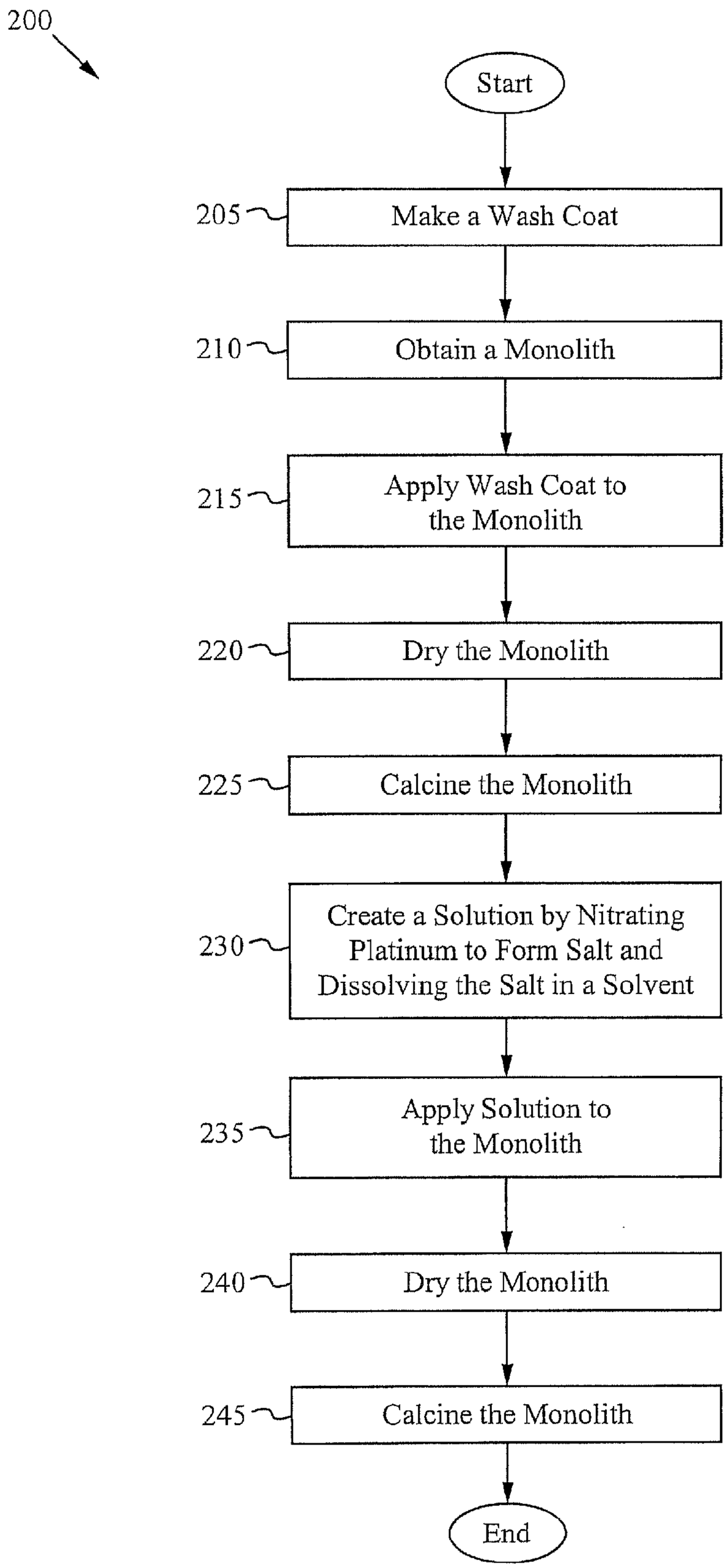

Fig. 2A (Prior Art)

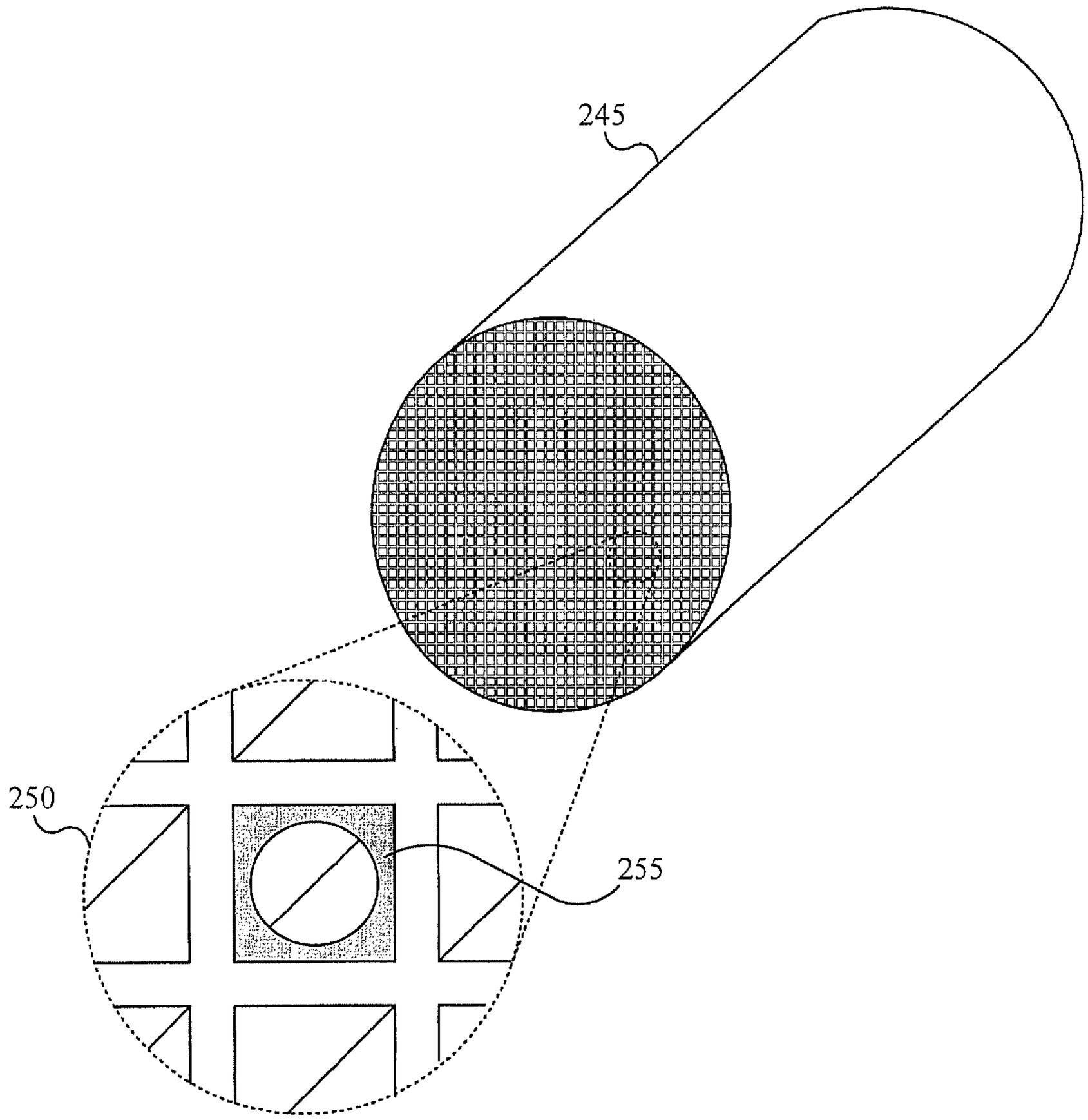

Fig. 2B (Prior Art)

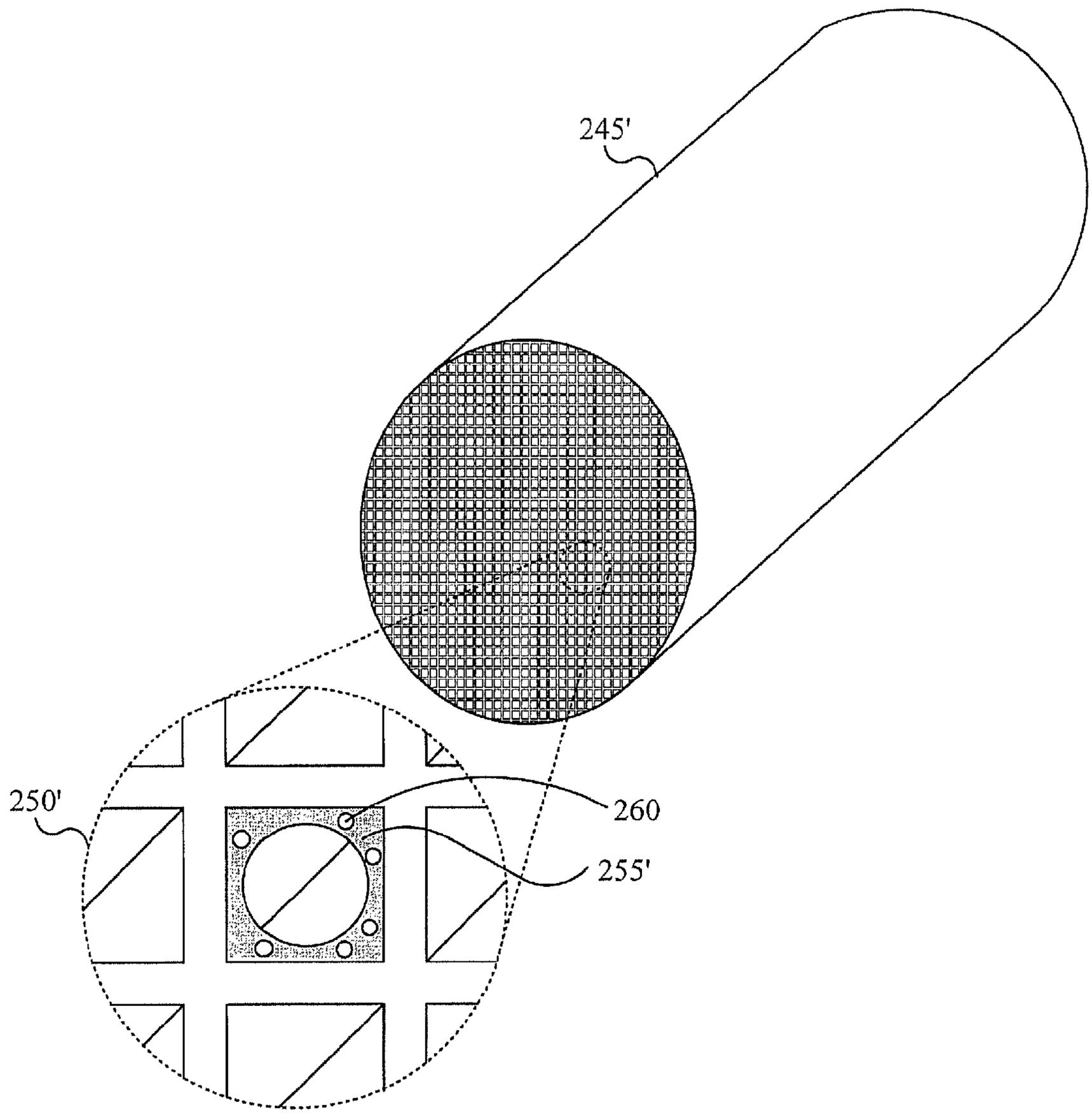

Fig. 2C (Prior Art)

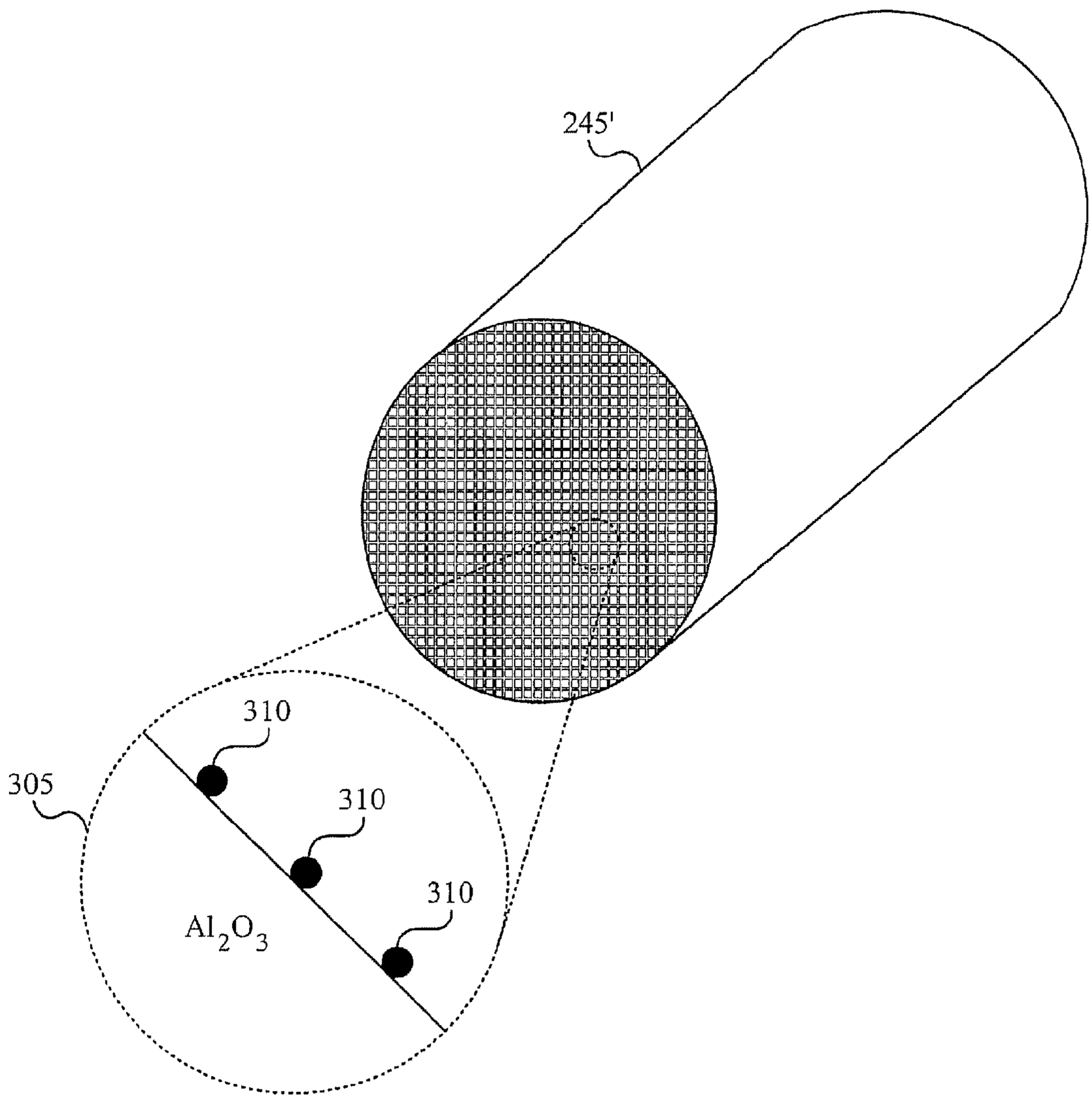

Fig. 3A

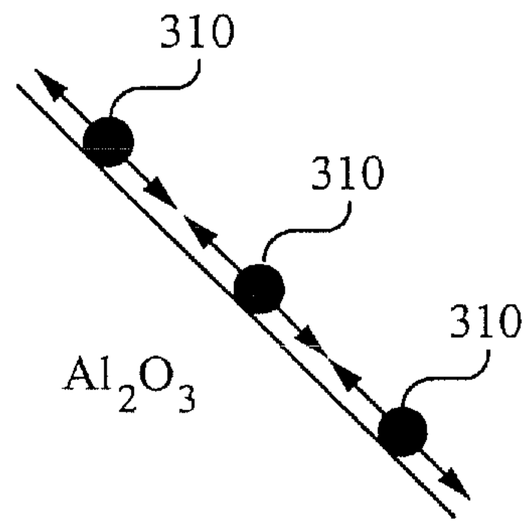

Fig. 3B

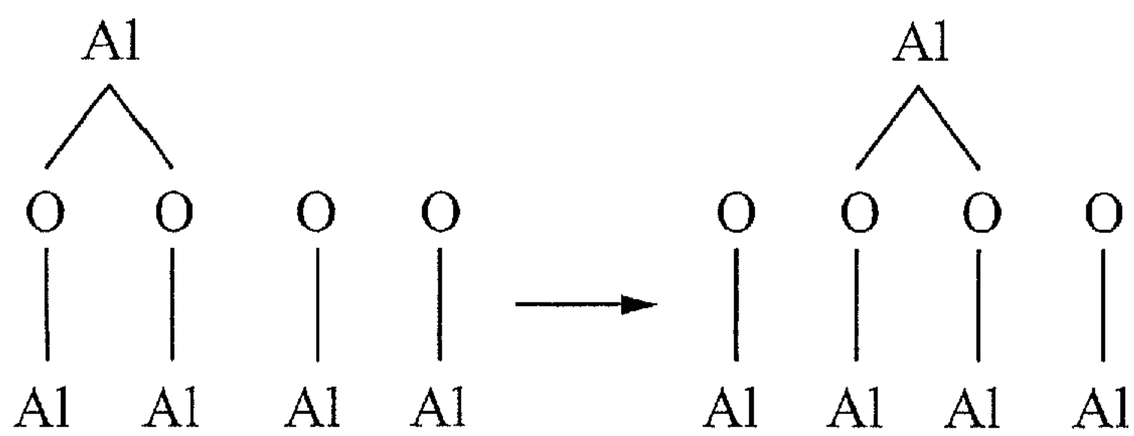

Fig. 3C

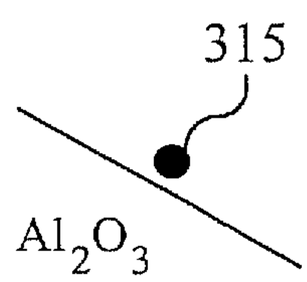

Fig. 3D

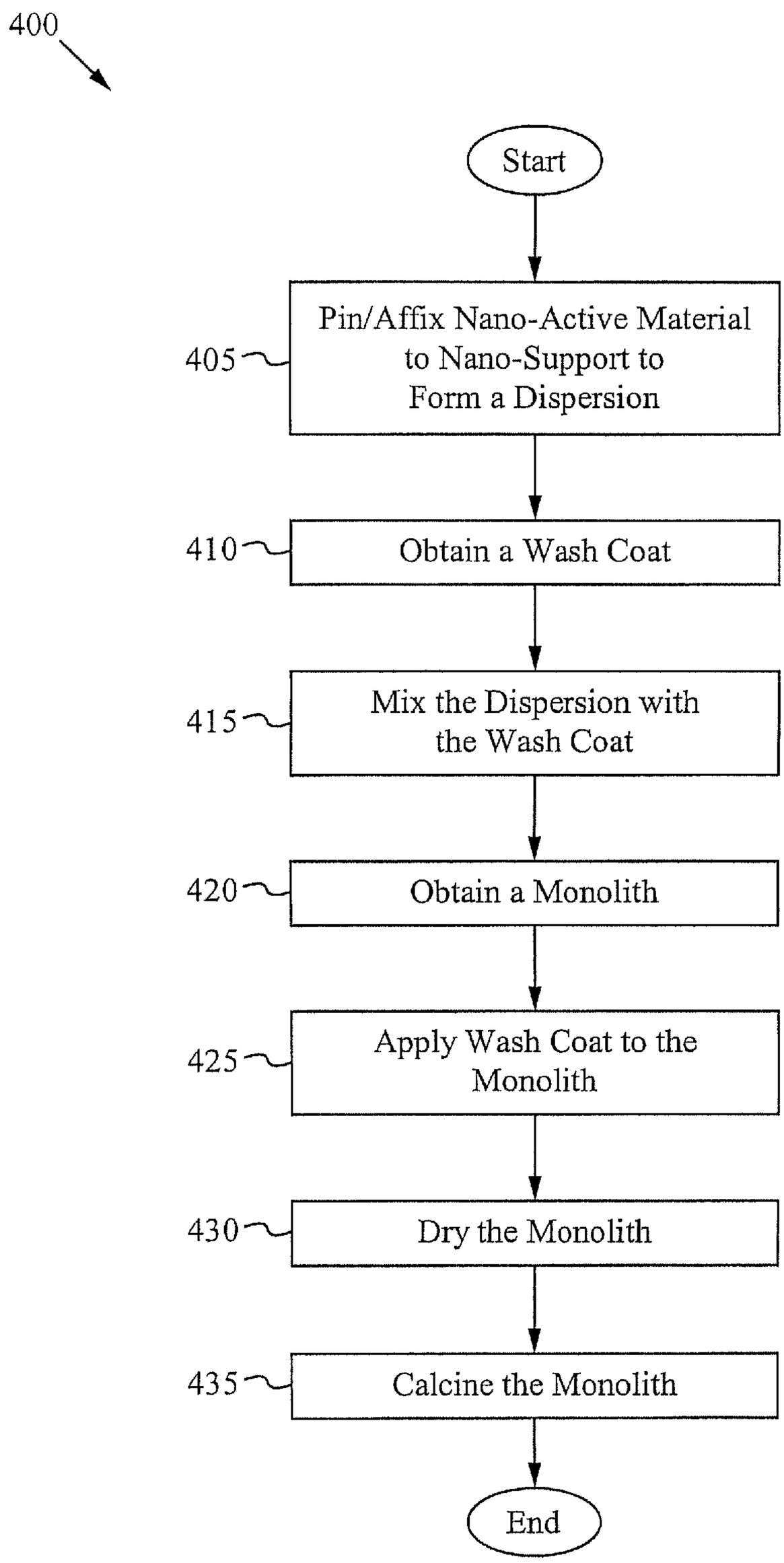
400
Start
405
Pin/Affix Nano-Active Material to Nano-Support to Form a Dispersion
410
Obtain a Wash Coat
415
Mix the Dispersion with the Wash Coat
420
Obtain a Monolith
425
Apply Wash Coat to the Monolith
430
Dry the Monolith
435
Calcine the Monolith
End

Fig. 4

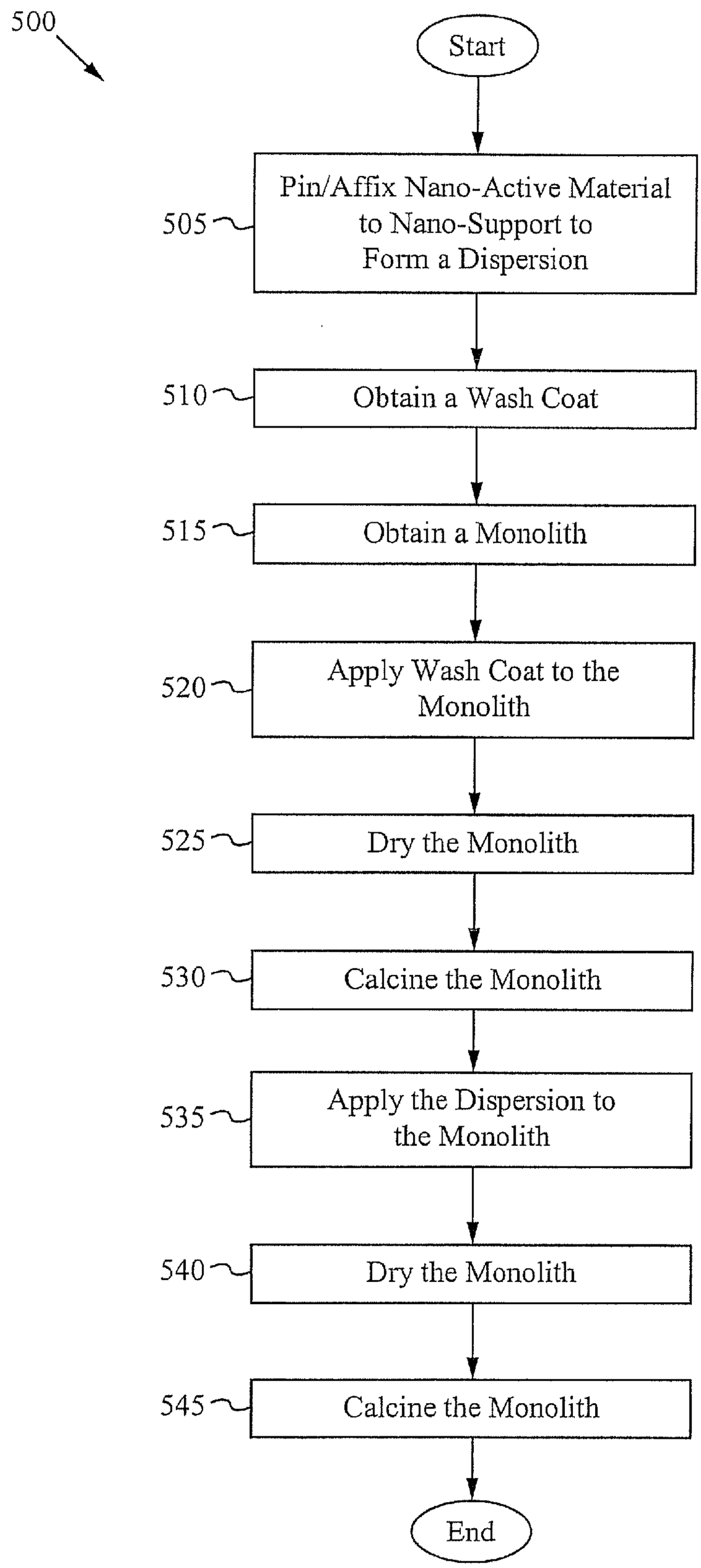
500
Start
505
Pin/Affix Nano-Active Material to Nano-Support to Form a Dispersion
510
Obtain a Wash Coat
515
Obtain a Monolith
520
Apply Wash Coat to the Monolith
525
Dry the Monolith
530
Calcine the Monolith
535
Apply the Dispersion to the Monolith
540
Dry the Monolith
545
Calcine the Monolith
End

Fig. 5

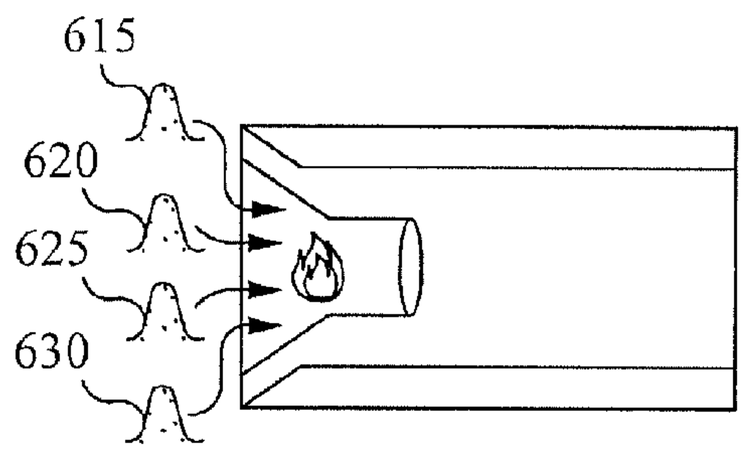

Fig. 6A

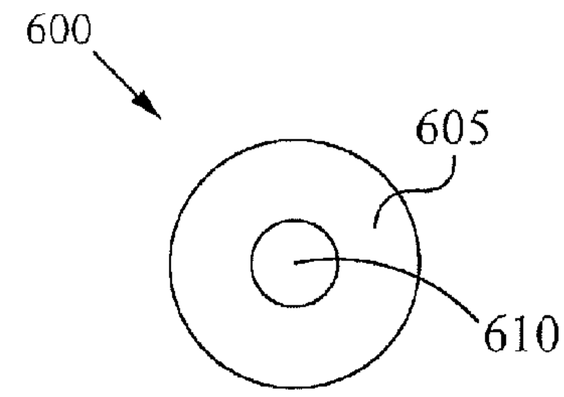

Fig. 6B

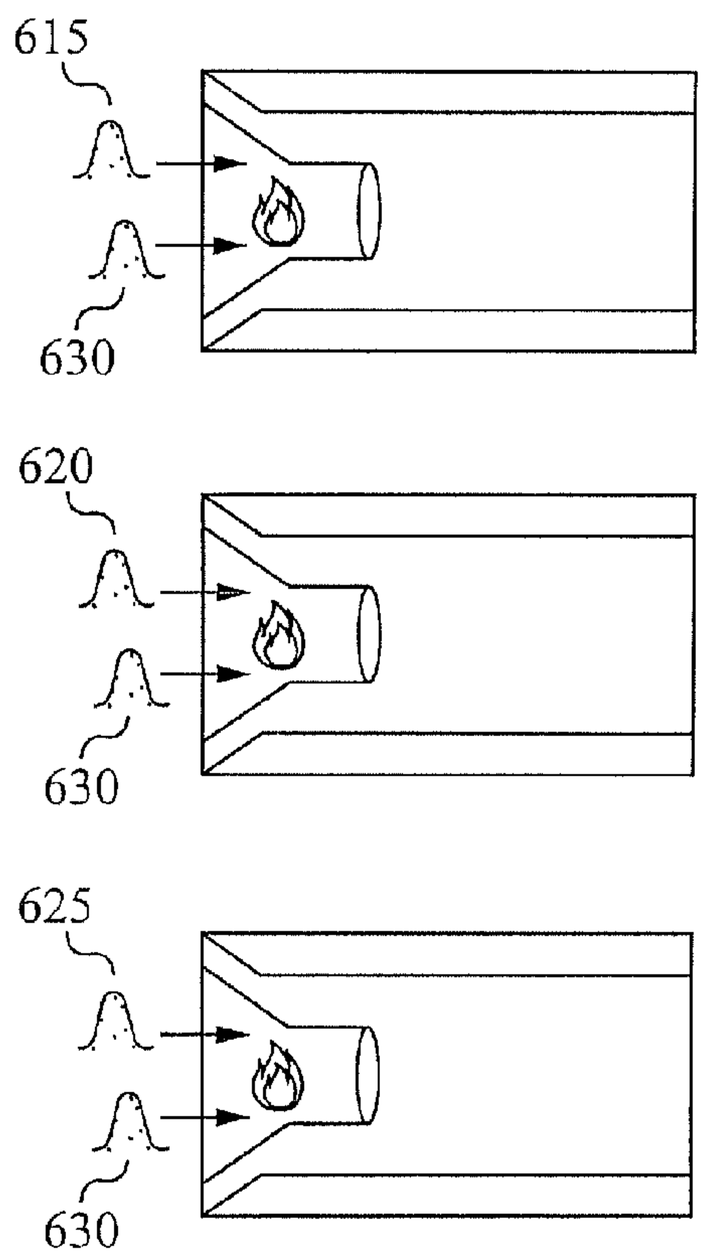

Fig. 7A

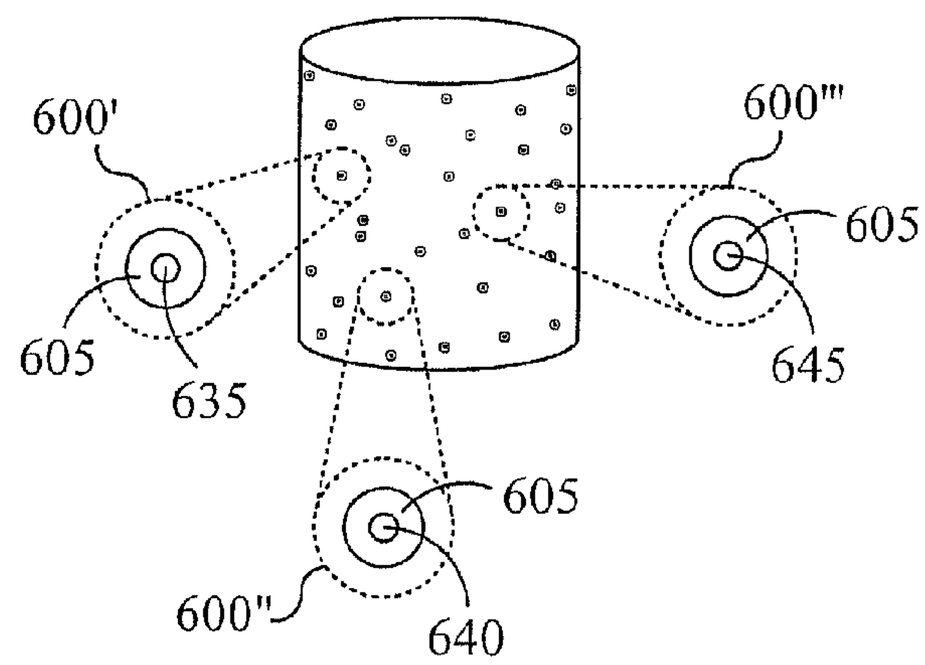

Fig. 7B

ADVANCED CATALYSTS FOR AUTOMOTIVE APPLICATIONS

CROSS-REFERENCE TO RELATED APPLICATIONS

This application claims priority to U.S. Provisional Patent Application Ser. No. 61/284,329, filed Dec. 15, 2009 and entitled "MATERIALS PROCESSING," which is hereby incorporated herein by reference in its entirety as if set forth herein.

BACKGROUND OF THE INVENTION

A catalytic converter for a car uses a catalyst to convert, for example, three harmful compounds in car exhaust into less harmful compounds. The three harmful compounds include hydrocarbons in the form of unburned gasoline, carbon monoxide formed by the combustion of gasoline, and nitrogen oxide created when heat in the engine forces nitrogen in the air to combine with oxygen. There are two main structures used in catalytic converters—honeycomb and ceramic beads. Most automobiles today use the honeycomb structure. The honeycomb structure is housed in a muffler-like package that comes before the exhaust pipe. The catalyst helps to convert carbon monoxide into carbon dioxide, the hydrocarbons into carbon dioxide and water, and the nitrogen oxides back into nitrogen and oxygen.

Various methods of manufacturing the catalyst used in the catalytic converter exist in the art. FIG. **1**A illustrates a first conventional method of manufacturing the catalyst. The first method is known as a one-dip process. At a step **105**, micron-sized platinum (Pt) ions are impregnated into micron-sized alumina (Al_2O_3) ions, resulting in micro-particles. The micro-particles have platinum atoms on the alumina ions. At a step **110**, a wash coat is made using micron-sized oxides that include pint size alumina and pint size silica (SiO_2), a certain amount of stabilizers for the alumina, and a certain amount of promoters. At a step **115**, the micro-particles are mixed together with the wash coat. At a step **120**, a cylindrical-shaped ceramic monolith is obtained. A cross-section of the monolith contains 300-600 channels per square inch. The channels are linear square channels that run from the front to the back of the monolith. At a step **125**, the monolith is coated with the wash coat. This can be achieved by dipping the monolith in the wash coat. As such, the channels of the monolith are coated with a layer of wash coat. At a step **130**, the monolith is dried. The layer of wash coat has an irregular surface, which has a far greater surface area than a flat surface. In addition, the wash coat when dried is a porous structure. The irregular surface and the porous structure are desirable because they give a high surface area, approximately 100-250 m^2/g, and thus more places for the micro-particles to bond thereto. As the monolith dries, the micro-particles settle on the surface and pores of the monolith. At a step **135**, the monolith is calcined. The calcination bonds the components of the wash coat to the monolith by oxide to oxide coupling. The catalyst is formed. FIG. **1**B illustrates a microscopic view **145** of a channel of the monolith **140** that is coated with the layer of wash coat **150** having platinum atoms **155**.

FIG. **2**A illustrates a second conventional method of manufacturing the catalyst. The second method is known as a two-dip process. At a step **205**, a wash coat is made using micron-sized oxides that include pint size alumina and pint size silica, a certain amount of stabilizers for the alumina, and a certain amount of promoters. At a step **210**, a cylindrical-shaped ceramic monolith is obtained. At a step **215**, the monolith is coated with the wash coat such as via dipping. As such, the channels are also coated with a layer of wash coat. Typically, the layer of wash coat has an irregular surface which has a far greater surface area than a flat surface. FIG. **2**B illustrates a microscopic view **250** of a channel of the monolith **245** coated with the layer of the wash coat **255**. Returning to FIG. **2**A, at a step **220**, the monolith is dried. The wash coat when dried is a porous structure. At a step **225**, the monolith is calcined. The calcination bonds the components of the wash coat to the monolith by oxide to oxide coupling. Micron-sized alumina oxides are then impregnated with micron-sized platinum ions and other promoters using a method that is well known in the art. Specifically, at a step **230**, platinum is nitrated, forming salt ($PtNO_3$). The $PtNO_3$ is dissolved in a solvent such as water, thereby creating a dispersion. At step **235**, the monolith is dipped into the solution. At a step **240**, the monolith is dried. At a step **245**, the monolith is calcined. The catalyst is formed. FIG. **2**C illustrates another microscopic view **250'** of the channel of the monolith **245'** coated with the layer of wash coat **255'** having platinum atoms **260**.

FIG. **3**A illustrates a microscopic view **305** of a surface of the layer of the wash coat after calcination. Platinum atoms **310** are attached to oxygen atoms of the alumina. When exhaust gas goes through the catalytic converter, the platinum atoms **310** help reduce the harmful compounds by converting them into less harmful compounds. However, these various methods of manufacturing the catalyst used in the catalytic converter suffer from a number of shortcomings. For example, the platinum atoms **310** are not fixed to their bonded oxygen atoms of the alumina and are able to move around to other available oxygen atoms as illustrated in FIGS. **3**B-**3**C. As the platinum atoms **310** move, the platinum atoms **310** begin to coalesce with other platinum atoms resulting in larger particles **315**, as shown in FIG. **3**D, and a more energetically favorable state. It is understood that as the platinum particles become larger, it detrimentally affects the catalyst since surface area of the platinum atoms decreases. In high temperature applications, such as in an aged catalytic converting testing, the movement of platinum atoms is magnified. In addition, since cost of platinum is extremely expensive, excessive use of platinum is unwanted.

The present invention addresses at least these limitations in the prior art.

SUMMARY OF THE INVENTION

In one aspect, a catalytic converter includes a honeycomb structure with an at least one nano-particle on the honeycomb structure. In some embodiments, the at least one nano-particle includes nano-active material and nano-support. The nano-active material is typically on the nano-support. The nano-active material is platinum, palladium, rhodium, or an alloy. The alloy is of platinum, palladium, and rhodium. The nano-support is alumina. In other embodiments, the nano-support includes a partially reduced alumina surface, which limits movement of the nano-active material on a surface of the nano-support.

In another aspect, a cordierite substrate in a catalytic converter includes a first type of nano-particles, a second type of nano-particles, and a third type of nano-particles. In some embodiments, the first type of nano-particles includes nano-active material and nano-support. The nano-active material is platinum and the nano-support is alumina. The nano-support includes a partially reduced alumina surface, which limits movement of the nano-active material on a surface of the nano-support. In other embodiments, the second type of nano-particles comprises nano-active material and nano-sup-

port. The nano-active material is palladium and the nano-support is alumina. The nano-support includes a partially reduced alumina surface, which limits movement of the nano-active material on a surface of the nano-support. In other embodiments, the third type of nano particles comprises nano-active material and nano-support. The nano-active material is rhodium and the nano-support is alumina. The nano-support includes a partially reduced alumina surface, which limits movement of the nano-active material on a surface of the nano-support.

Yet, in another aspect, a method of making a catalytic converter includes creating a dispersion using an at least one nano-particle and obtaining a wash coat. In some embodiments, the at least one nano-particle includes nano-active material and nano-support. The nano-active material is platinum, palladium, rhodium, or an alloy. The nano-support is alumina. The nano-support includes a partially reduced alumina surface, which limits movement of the nano-active material on a surface of the nano-support. In other embodiments, the creating step comprises mixing a carrier material and different catalyst materials in a high temperature condensation technology, thereby producing the at least one nano-particle, and combining it with a liquid. The carrier material is alumina. The different catalyst materials include platinum, palladium, and rhodium. Typically, the high temperature condensation technology is plasma. Alternatively, the creating step comprises mixing a carrier material and a first catalyst material in a high temperature condensation technology, thereby producing a first type of nano-particles, mixing the carrier material and a second catalyst material in the high temperature condensation technology, thereby producing a second type of nano-particles, mixing the carrier material and a third catalyst material in the high temperature condensation technology, thereby producing a third type of nano-particles, collecting together the first type of nano-particles, the second type of nano-particles, and a third type of nano-particles, and combining with a liquid. The carrier material is alumina. The first catalyst material is platinum. The second catalyst material is palladium. The third catalyst material is rhodium.

Yet, in other embodiments, the method of making a catalytic converter further includes mixing the dispersion with the wash coat, applying the mix to a monolith, drying the monolith, and calcining the monolith. Alternatively, the method of making a catalytic converter further includes applying the wash coat to a monolith, drying the monolith, calcining the monolith, administering the dispersion to the monolith, drying the monolith, and calcining the monolith.

Yet, in another aspect, a method of making a three-way catalytic converter includes creating a dispersion by using different types of nano-particles, obtaining a wash coat, mixing the dispersion with the wash coat, applying the mix to a monolith, drying the monolith, and calcining the monolith. The creating step includes using a high temperature condensation technology. In some embodiments, the high temperature condensation technology is plasma. Each of the different types of nano-particles comprises nano-active material and nano-support. The nano-active material is platinum, palladium, rhodium, or an alloy. The nano-support is alumina. The nano-support includes a partially reduced alumina surface, which limits movement of the nano-active material on a surface of the nano-support.

Yet, in another aspect, a method of making a three-way catalytic converter includes creating a dispersion using different types of nano-particles, obtaining a wash coat, applying the wash coat to a monolith, drying the monolith, calcining the monolith, administering the dispersion to the monolith, drying the monolith, and calcining the monolith. The creating step includes using a high temperature condensation technology. In some embodiments, the high temperature condensation technology is plasma. Each of the different types of nano-particles includes nano-active material and nano-support. The nano-active material is platinum, palladium, rhodium, or an alloy. The nano-support is alumina. The nano-support includes a partially reduced alumina surface, which limits movement of the nano-active material on a surface of the nano-support.

Yet, in another aspect, a method of making a two-way catalytic converter includes creating a dispersion by using same type of nano-particles, obtaining a wash coat, mixing the dispersion with the wash coat, applying the mix to a monolith, drying the monolith, and calcining the monolith. The creating step includes using a high temperature condensation technology. In some embodiments, the high temperature condensation technology is plasma. Each of the same type of nano particles includes nano-active material and nano-support. The nano-active material is platinum. The nano-support is alumina. The nano-support includes a partially reduced alumina surface, which limits movement of the nano-active material on a surface of the nano-support.

Yet, in another aspect, a method of making a two-way catalytic converter includes creating a dispersion using same type of nano-particles, obtaining a wash coat, applying the wash coat to a monolith, drying the monolith, calcining the monolith, administering the dispersion to the monolith, drying the monolith, and calcining the monolith. The creating step includes using a high temperature condensation technology. In some embodiments, the high temperature condensation technology is plasma. Each of the same type of nano-particles includes nano-active material and nano-support. The nano-active material is platinum. The nano-support is alumina. The nano-support includes a partially reduced alumina surface, which limits movement of the nano-active material on a surface of the nano-support.

BRIEF DESCRIPTION OF THE DRAWINGS

FIGS. **1**A-**1**B illustrate a first conventional method of manufacturing a catalyst.

FIGS. **2**A-**2**C illustrate a second conventional method of manufacturing the catalyst.

FIGS. **3**A-**3**C illustrate activity on a surface of a layer of wash coat on the monolith using the first conventional method and the second conventional method.

FIG. **3**D illustrates platinum atoms coalesced into a large particle.

FIG. **4** illustrates a first inventive process of creating an advanced catalyst in accordance with the present invention.

FIG. **5** illustrates a first inventive process of creating an advanced catalyst in accordance with the present invention.

FIG. **6**A illustrates a first method of creating a dispersion in accordance with the present invention.

FIG. **6**B illustrates a nano-particle in accordance with the present invention.

FIG. **7**A illustrates a second method of creating a dispersion in accordance with the present invention.

FIG. **7**B illustrates a collection of different nano-particles in accordance with the present invention.

DETAILED DESCRIPTION OF THE INVENTION

Reference will now be made in detail to implementations of the present invention as illustrated in the accompanying drawings. The drawings may not be to scale. The same reference indicators will be used throughout the drawings and the

following detailed description to refer to identical or like elements. In the interest of clarity, not all of the routine features of the implementations described herein are shown and described. It will, of course, be appreciated that in the development of any such actual implementation, numerous implementation-specific decisions must be made in order to achieve the developer's specific goals, such as compliance with application, safety regulations and business related constraints, and that these specific goals will vary from one implementation to another and from one developer to another. Moreover, it will be appreciated that such a development effort will be a routine undertaking of engineering for those of ordinary skill in the art having the benefit of this disclosure.

The following description of the invention is provided as an enabling teaching which includes the best currently known embodiment. One skilled in the relevant arts, including but not limited to chemistry, physics and material sciences, will recognize that many changes can be made to the embodiment described, while still obtaining the beneficial results of the present invention. It will also be apparent that some of the desired benefits of the present invention can be obtained by selecting some of the features of the present invention without utilizing other features. Accordingly, those who work in the art will recognize that many modifications and adaptations to the present inventions are possible and may even be desirable in certain circumstances, and are a part of the present invention. Thus, the following description is provided as illustrative of the principles of the present invention and not in limitation thereof, since the scope of the present invention is defined by the claims.

Harmful compounds from internal combustion engines include carbon monoxide (CO), hydrocarbons (H_aC_b), and oxides of nitrogen (NO_x). Two forms of internal combustion engines are diesel engines and gas engines. A catalytic converter is designed to reduce these harmful compounds by converting them into less harmful compounds. As discussed above, conventional catalysts used in catalytic converters use micro-particles such as micron-sized oxides and micron-sized catalyst materials (e.g. platinum). Embodiments of the present invention use nano-sized oxides and nano-sized catalyst materials to create advanced catalysts usable in catalytic converters of diesel engines and gas engines.

The term "nano-particle" is generally understood by those of ordinary skill to encompass a particle having a diameter in the order of nanometers, as described herein.

Diesel Engines

A diesel engine includes a diesel oxidation catalyst (DOC), a separate NOx reduction technology, and a diesel particulate filter (DPF). The DOC is a two-way catalytic converter, which converts (1) CO and O_2 to CO_2 and (2) H_aC_b and O_2 to CO_2 and H_2O. The DOC uses platinum as an oxidizing agent. Conventional methods of creating the DOC use micron-size platinum ions. Embodiments of the present invention use nano-sized platinum particles instead. FIGS. **4-5** illustrate two inventive processes of creating an advanced DOC catalyst in accordance with the present invention. The separate NOx reduction technology reduces the NO_x emissions by using urea as a reducing agent. The DPF catches subparticles (e.g. nongaseous hydrocarbons) from an exhaust gas of the diesel engine.

FIG. **4** illustrates a first inventive process **400** for creating the advanced DOC catalyst in accordance with the present invention. At a step **405**, nano-active materials are pinned or affixed to nano-supports, forming nano-particles, by using a high temperature condensation technology such as a plasma gun. In some embodiments, the nano-active materials are gaseous platinum atoms, and the nano-supports are some form of alumina, such as aluminum plus oxygen. For the sake of brevity, platinum will be discussed herein, but it will be apparent to those of ordinary skill in the art that different platinum group metals can be used to take advantage of their different properties. Since nano-active materials are strongly attached to nano-supports, movement or coalescing/conglomeration of the nano-active materials is limited, prevented, or both. The nano-particles are then combined with a liquid to form a dispersion. The nano-particles and the dispersion are created using methods described in detail in U.S. patent application Ser. No. 12/001,643, filed Dec. 11, 2007, which is hereby incorporated by reference. At a step **410**, a wash coat is obtained. The wash coat is commercially purchased or is made. Typically, the wash coat is a slurry. The wash coat is made by using micron-sized oxides that include alumina and silica. In some embodiments, a certain amount of stabilizers for the alumina and a certain amount of promoters are also added to the wash coat. Typically, there is no difference between the commercially purchased wash coat and the created wash coat. At a step **415**, the dispersion is mixed with the wash coat. At a step **420**, a cylindrical-shaped ceramic monolith is obtained. The monolith contains a large proportion of cordierite since cordierite has a high resistance to thermal shock. In some embodiments, the monolith is a honeycomb structure. A cross-section of the monolith preferably contains 300-600 channels per square inch. The channels are preferably linear square channels that run from the front to the back of the monolith. At a step **425**, the monolith is coated with a layer of the wash coat. This can be achieved by dipping the monolith in the wash coat. The channels of the monolith are also coated with a layer of wash coat. Since the wash coat contains the nano-particles, nano-platinum particles are also on the surface of the monolith. At a step **430**, the monolith is dried. At a step **435**, the monolith is calcined. The calcination bonds the components of the wash coat to the monolith by oxide to oxide coupling. In addition, the calcination allows the nano-active materials to strongly attach to the nano-supports because the nano-supports have a partially reduced alumina surface. As such, the advanced DOC catalyst is formed.

FIG. **5** illustrates a second inventive process **500** for creating the advanced DOC catalyst in accordance with the present invention. At a step **505**, nano-active materials are pinned or affixed to nano-supports, forming nano-materials, by using a high temperature condensation technology such as a plasma gun. In some embodiments, the nano-active materials are gaseous platinum atoms and the nano-supports are some form of alumina, such as aluminum plus oxygen. Since nano-active materials are strongly attached to nano-supports, movement or coalescing/conglomeration of the nano-active materials is limited, prevented, or both. The nano-particles are then combined with a liquid to form a dispersion. At a step **510**, a wash coat is obtained. The wash coat is commercially purchased or is made. The wash coat is made by using micron-sized oxides that include alumina and silica. In some embodiments, a certain amount of stabilizers for the alumina and a certain amount of promoters are also added to the wash coat. Typically, there is no difference between the commercially purchased wash coat and the created wash coat. At a step **515**, a cylindrical-shaped ceramic monolith is obtained. At a step **520**, the monolith is coated with a layer of the wash coat such as via dipping. As such, the channels of the monolith are also coated with a layer of the wash coat. At a step **525**, the monolith is dried. At a step **530**, the monolith is calcined. At a step **535**, the dispersion is applied to the monolith via dipping. At a step **540**, the monolith is dried. At a step **545**, the monolith is calcined. The calcination bonds the components

of the wash coat to the monolith by oxide to oxide coupling. As such, the advanced DOC catalyst is formed

In order for the wash coat to get good bonding to the monolith, both pH level and viscosity of the wash coat must be in a certain range. Typically, the pH level must be between four and five to achieve oxide-oxide coupling. If the pH level is too low, then the viscosity is too high; as such, the wash coat is a paste instead of a slurry. If the pH level is too high, then the viscosity is too low; as such, even after calcination, the wash coat does not bond to the monolith. Although the use of nanomaterials applied to the advanced DOC catalyst is described, the use of nanomaterials is able to be applied to the DPF and the NOx reduction technology used in the diesel engine. Other catalysts in the automation space are also contemplated.

Gas Engines

A gas engine cycles from oxygen rich to oxygen poor (e.g., an oxidizing state to a reducing state). As such, a conventional catalytic converter for gas engines includes an oxidation catalyst and a reduction catalyst. The reduction catalyst is a first stage in the conventional catalytic converter. The reduction catalyst uses platinum and rhodium to help reduce NOx emissions. For example, rhodium catalyzes CO and NO_2 to N_2 and CO_2. The oxidation catalyst is a second stage in the conventional catalytic converter. It reduces unburned hydrocarbons and carbon monoxide by oxidizing them using platinum and palladium. For example, platinum catalyzes CO and O_2 to CO_2 and catalyzes H_aC_b and O_2 to CO_2 and H_2O. Palladium catalyzes H_2 and O_2 to C_2O. The oxidation catalyst aids reaction of the carbon monoxide and hydrocarbons with the remaining oxygen in the exhaust pipe. Accordingly, the gas engine uses a three-way catalytic converter to reduce the three harmful compounds.

Conventional methods of creating the three-way catalytic converter use micron-sized catalytic materials and supports, as discussed above. In addition, the conventional methods use multiple dippings to get palladium ions, rhodium ions, and platinum ions on the monolith since a dip that includes, for example, palladium ions and rhodium ions would produce palladium-rhodium alloys, which is not beneficial in certain conditions and/or applications. Embodiments of the present invention use nano-sized catalytic materials and supports instead. In additions, embodiments of the present invention allows a dip to include palladium ions, rhodium ions, and platinum ions without creating palladium-rhodium alloys, because the different ions have different solid phases.

Methods of creating the advanced three-way catalyst for gas engines are similar to the methods of creating the DOC as discussed above. The difference is in the initial steps **405** and **505** of FIGS. **4-5**, respectively. Specifically, instead of using just gaseous platinum atoms in the dispersion, gaseous palladium atoms and gaseous rhodium atoms are also used.

FIG. **6**A illustrates a first method of creating the dispersion in accordance with the present invention. Catalyst materials include platinum **615**, palladium **620**, and rhodium **625**. Other catalyst materials are contemplated. Carrier material includes alumina **630**. The catalyst materials **615**, **620**, **625** and carrier material **630** are mixed in a plasma gun. After vaporizing the catalyst materials and carrier material to form a vapor cloud and quenching the vapor cloud, the vapor cloud precipitates nano-particles. FIG. **6**B illustrates a nano-particle **600** in accordance with the present invention. The nano-particle **600** comprises a nano-active material **610** and a nano-support **605**. Since the plasma gun is extremely chaotic, the catalyst materials form into an alloy. As such, the nano-active material **610** is an alloy. Since a ratio of the nano-active material **610** consisting of platinum, palladium, and rhodium, depends on an initial ratio of each of the catalyst materials used, different forms of alloys are formed on the nano-support **605**. The nano-particles **600** are combined with the liquid to form the dispersion.

FIG. **7**A illustrates a second method of creating the dispersion in accordance with the present invention. Instead of mixing platinum **615**, palladium **620**, rhodium **625**, and alumina **630** in the plasma gun, each of the catalyst materials are separately mixed with alumina **630** in the plasma gun. As such, after vaporizing and quenching each of the catalyst materials, three different nano-particles are formed. A collection of the different nano-particles are combined with the liquid to form the dispersion. The three different nano-particles are illustrated in FIG. **7**B. A first nano-particle **600'** is a platinum nano-active material **635** on the alumina nano-support **605**. A second nano-particle **600"** is a palladium nano-active material **640** on the alumina nano-support **605**. A third nano-particle **600'''** is a rhodium nano-active material **645** on the alumina nano-support **605**. A size of the nano-active material is able to be controlled based on a quantity of the nano-active material that was initially placed in the plasma gun. Concentration of each different nano-particle **600'**, **600"**, **600'''** is able to be individually and/or collectively controlled.

After creating a dispersion either using the first method (as illustrated in FIG. **6**A) or the second method (as illustrated in FIG. **7**A), the first inventive process **400** continues at a step **410** and the second inventive process **500** continues at a step **510**, as illustrated in FIGS. **4-5**, respectively.

While the invention has been described with reference to numerous specific details, one of ordinary skill in the art will recognize that the invention can be embodied in other specific forms without departing from the spirit of the invention. Thus, one of ordinary skill in the art will understand that the invention is not to be limited by the foregoing illustrative details, but rather is to be defined by the appended claims.

We claim:

1. A catalytic converter comprising:

a honeycomb structure; and

a washcoat layer on the honeycomb structure comprising nano-particles and micron sized oxide particles, wherein the nano-particles are plasma-generated;

wherein the nano-particles consist of a single nano-active material component and a single nano-support component.

2. The catalytic converter of claim **1**, wherein the nano-active material comprises platinum.

3. The catalytic converter of claim **1**, wherein the nano-active material comprises palladium.

4. The catalytic converter of claim **1**, wherein the nano-active material comprises rhodium.

5. The catalytic converter of claim **1**, wherein the nano-active material comprises an alloy.

6. The catalytic converter of claim **1**, wherein the nano-support comprises alumina.

7. The catalytic converter of claim **1**, wherein the nano-support comprises a partially reduced alumina surface.

8. The catalytic converter of claim **1**, wherein the micron sized oxide particles comprise alumina.

9. The catalytic converter of claim **1**, wherein the nano-active material comprises an alloy comprising platinum and palladium.

10. A cordierite substrate in a catalytic converter comprising:

a. a first type of plasma-generated nano-particles consisting of a single first nano-active material component and a single first nano-support component; and

b. a second type of plasma-generated nano-particles consisting of a single second nano-active material component and a single second nano-support component.

11. The cordierite substrate of claim **10**, wherein the first nano-active material comprises platinum.

12. The cordierite substrate of claim **10**, wherein the first nano-support comprises alumina.

13. The cordierite substrate of claim **10**, wherein the first nano-support comprises a partially reduced alumina surface.

14. The cordierite substrate of claim **10**, wherein the first type of nano-active material comprises palladium.

15. The cordierite substrate of claim **14**, wherein the first nano-support comprises alumina.

16. The cordierite substrate of claim **10**, wherein the second nano-support comprises a partially reduced alumina surface.

17. The cordierite substrate of claim **10**, wherein the second nano-active material comprises rhodium.

18. The cordierite substrate of claim **10**, wherein the second nano-support comprises alumina.

19. The cordierite substrate of claim **10**, wherein the third nano-support comprises a partially reduced alumina surface.

20. The cordierite substrate of claim **10**, wherein the first nano-active material comprises palladium, and the second nano-active material comprises rhodium.

21. The cordierite substrate of claim **10**, further comprising a third type of plasma-generated nano-particles comprising a third nano-active material and a third nano-support.

22. The cordierite substrate of claim **21**, wherein the first nano-active material comprises palladium, the second nano-active material comprises rhodium, and the third nano-active material comprises platinum.

23. The cordierite substrate of claim **21**, wherein the first nano-support and the second nano support comprise alumina.

24. A catalytic converter comprising:

a honeycomb structure;

oxidation nano-particles on the honeycomb structure, wherein the oxidation nano-particles comprise particles having a single oxidation nano-active material component and a single nano-support component; and

reduction nano-particles on the honeycomb structure, wherein the reduction nano-particles comprise particles having a single reduction nano-active material and a single nano-support component;

wherein the oxidation nano-particles and reduction nano-particles are plasma-generated.

25. The catalytic converter of claim **24**, wherein the oxidation nano-particles and reduction nano-particles are part of a washcoat layer formed on the honeycomb structure.

26. The catalytic converter of claim **24**, wherein the oxidation nano-particles are part of a first washcoat layer on the honeycomb structure and reduction nano-particles are part of a second washcoat layer formed on the honeycomb structure.

27. The catalytic converter of claim **24**, wherein the oxidation nano-active material comprises palladium.

28. The catalytic converter of claim **24**, wherein the oxidation nano-active material comprises platinum.

29. The catalytic converter of claim **24**, wherein the reduction nano-active material comprises rhodium.

30. The catalytic converter of claim **24**, wherein the nano support of the oxidation nano-particles comprises alumina.

31. The catalytic converter of claim **24**, further comprising micron sized oxide particles on the honeycomb structure.

* * * * *