US008922163B2

(12) **United States Patent**
**Macdonald**

(10) **Patent No.: US 8,922,163 B2**
(45) **Date of Patent: Dec. 30, 2014**

(54) **AUTOMATED BATTERY AND DATA DELIVERY SYSTEM**

(76) Inventor: **Murray Macdonald**, West Vancouver (CA)

( * ) Notice: Subject to any disclaimer, the term of this patent is extended or adjusted under 35 U.S.C. 154(b) by 423 days.

(21) Appl. No.: **13/265,803**

(22) PCT Filed: **Apr. 15, 2010**

(86) PCT No.: **PCT/CA2010/000557**
§ 371 (c)(1),
(2), (4) Date: **Oct. 21, 2011**

(87) PCT Pub. No.: **WO2010/121356**
PCT Pub. Date: **Oct. 28, 2010**

(65) **Prior Publication Data**

US 2012/0045303 A1 Feb. 23, 2012

**Related U.S. Application Data**

(60) Provisional application No. 61/172,649, filed on Apr. 24, 2009.

(51) **Int. Cl.**

| | |
|---|---|
| ***H02J 7/00*** | (2006.01) |
| ***G06F 19/00*** | (2011.01) |
| ***A47F 10/00*** | (2006.01) |
| *H01M 10/46* | (2006.01) |

(52) **U.S. Cl.**
CPC ..... ***A47F 10/00*** (2013.01); *H01M 10/46* (2013.01)
USPC ..... **320/109**; 700/245

(58) **Field of Classification Search**
CPC ..... B65G 1/00
USPC ..... 320/109, 128, 137, DIG. 34; 700/245, 700/253, 258; 901/1
See application file for complete search history.

(56) **References Cited**

U.S. PATENT DOCUMENTS

| | | | | | |
|---|---|---|---|---|---|
| 4,450,400 | A | * | 5/1984 | Gwyn | 320/109 |
| 4,492,504 | A | * | 1/1985 | Hainsworth | 414/273 |
| 4,983,903 | A | * | 1/1991 | Bae et al. | 320/128 |
| 4,987,834 | A | * | 1/1991 | Peck et al. | 104/300 |
| 5,187,423 | A | * | 2/1993 | Marton | 320/109 |
| 5,544,784 | A | * | 8/1996 | Malaspina | 221/135 |
| 5,545,967 | A | * | 8/1996 | Osborne et al. | 320/109 |

(Continued)

OTHER PUBLICATIONS

Canadian Intellectual Property Office, International Search Report and Written Opinion, International Application No. PCT/ CA2010/ 000557, dated Jul. 30, 2010, 9 pages.

*Primary Examiner* — Richard V Muralidar
(74) *Attorney, Agent, or Firm* — Stoel Rives LLP

(57) **ABSTRACT**

Systems and methods are provided that use a mobile robotic device to transport rechargeable batteries between a base station, which charges the batteries, and a battery operated device, such as battery powered kiosk or signage system, which uses a charged battery as a power source. After traveling to a battery operated device, the mobile robotic device removes any discharged batteries from the battery operated device and installs a charged battery. The mobile robotic device then travels to the base station and attaches the discharged battery to the base station for recharging. The mobile robotic device may be configured to perform other transfers, such as data transfers and paper transfers. In addition, the mobile robotic device may be configured to perform a photographic and spatial survey of the isles, retail shelves, and surrounding environment for various purposes, such as generating three-dimensional store models and remote viewing.

**14 Claims, 5 Drawing Sheets**

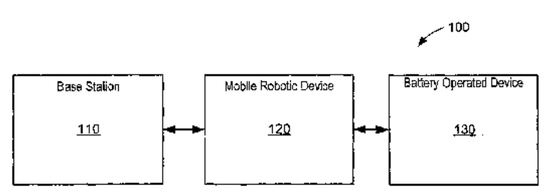


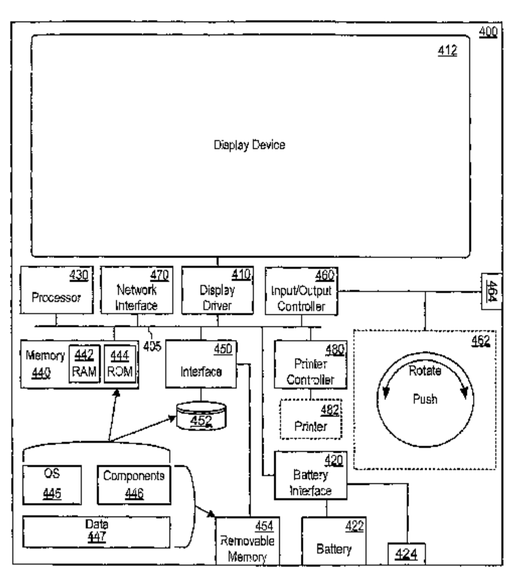

(56) **References Cited**

U.S. PATENT DOCUMENTS

| | | | | |
|---|---|---|---|---|
| 5,612,606 | A * | 3/1997 | Guimarin et al. | 320/109 |
| 5,852,353 | A * | 12/1998 | Kochanneck | 318/558 |
| 6,094,028 | A * | 7/2000 | Gu et al. | 320/109 |
| 6,324,650 | B1 * | 11/2001 | Ogilvie | 726/2 |
| 6,371,230 | B1 * | 4/2002 | Ciarla et al. | 180/68.5 |
| 6,443,543 | B1 * | 9/2002 | Chiang | 312/223.3 |
| 6,584,375 | B2 | 6/2003 | Bancroft et al. | |
| 6,771,878 | B1 * | 8/2004 | Caramico et al. | 386/243 |
| 6,801,834 | B1 * | 10/2004 | Konshak et al. | 700/245 |
| 6,817,824 | B2 * | 11/2004 | Winkler | 414/273 |
| 6,822,422 | B2 * | 11/2004 | Sagawa | 320/109 |
| 7,004,710 | B1 * | 2/2006 | Quade | 414/395 |
| 7,152,789 | B2 * | 12/2006 | Hasegawa et al. | 235/383 |
| 7,206,753 | B2 | 4/2007 | Bancroft et al. | |
| 7,255,191 | B2 * | 8/2007 | Baldwin et al. | 180/220 |
| 7,271,725 | B2 * | 9/2007 | Sugiyama | 340/572.1 |
| 8,022,812 | B2 * | 9/2011 | Beniyama et al. | 340/10.1 |
| 2002/0165643 | A1 | 11/2002 | Bancroft et al. | |
| 2004/0093650 | A1 * | 5/2004 | Martins et al. | 901/1 |
| 2004/0143373 | A1 * | 7/2004 | Ennis | 701/1 |
| 2005/0018216 | A1 * | 1/2005 | Barsness et al. | 358/1.6 |
| 2005/0047777 | A1 * | 3/2005 | Molldrem, Jr. | 396/564 |
| 2005/0156562 | A1 | 7/2005 | Cohen et al. | |
| 2005/0238465 | A1 | 10/2005 | Razumov | |
| 2006/0214634 | A1 * | 9/2006 | Baba | 320/114 |
| 2007/0201103 | A1 * | 8/2007 | Morgan | 358/400 |
| 2007/0250212 | A1 | 10/2007 | Halloran et al. | |
| 2008/0077511 | A1 * | 3/2008 | Zimmerman | 705/28 |

* cited by examiner

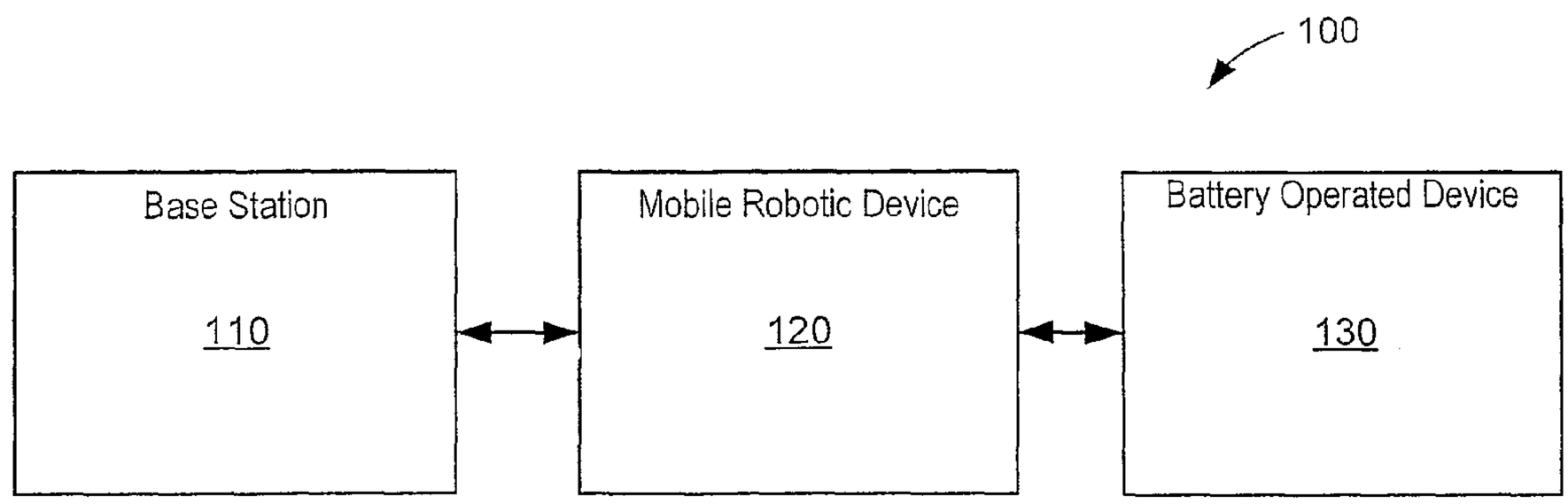


Figure 1

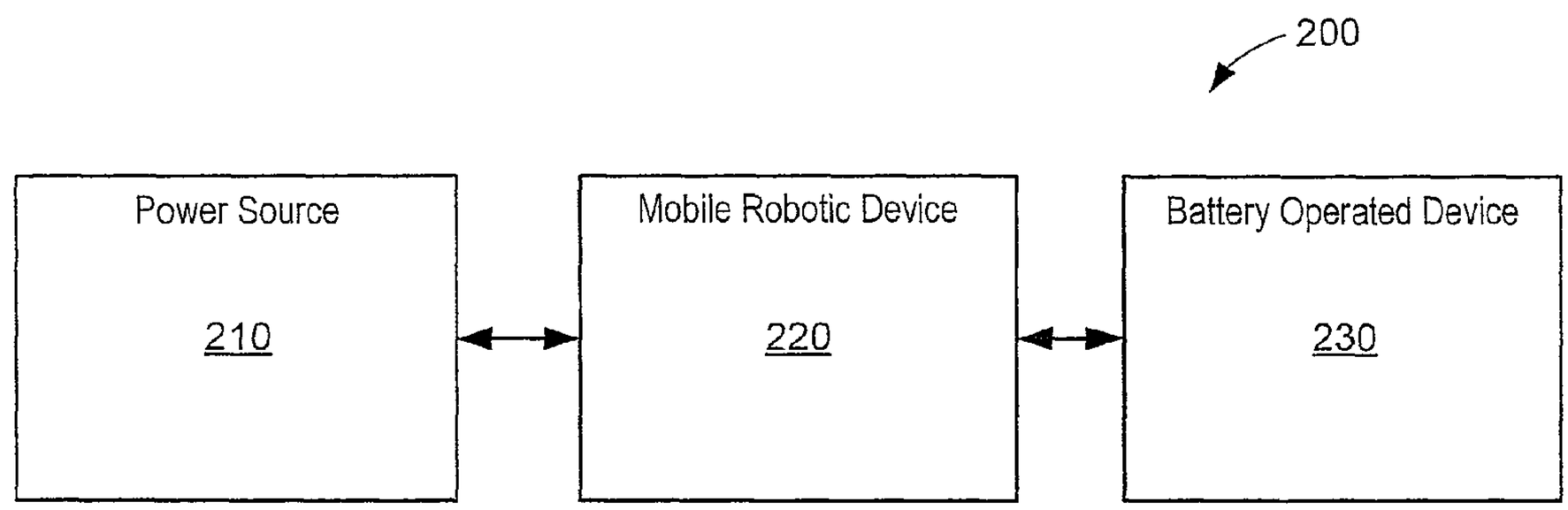


Figure 2

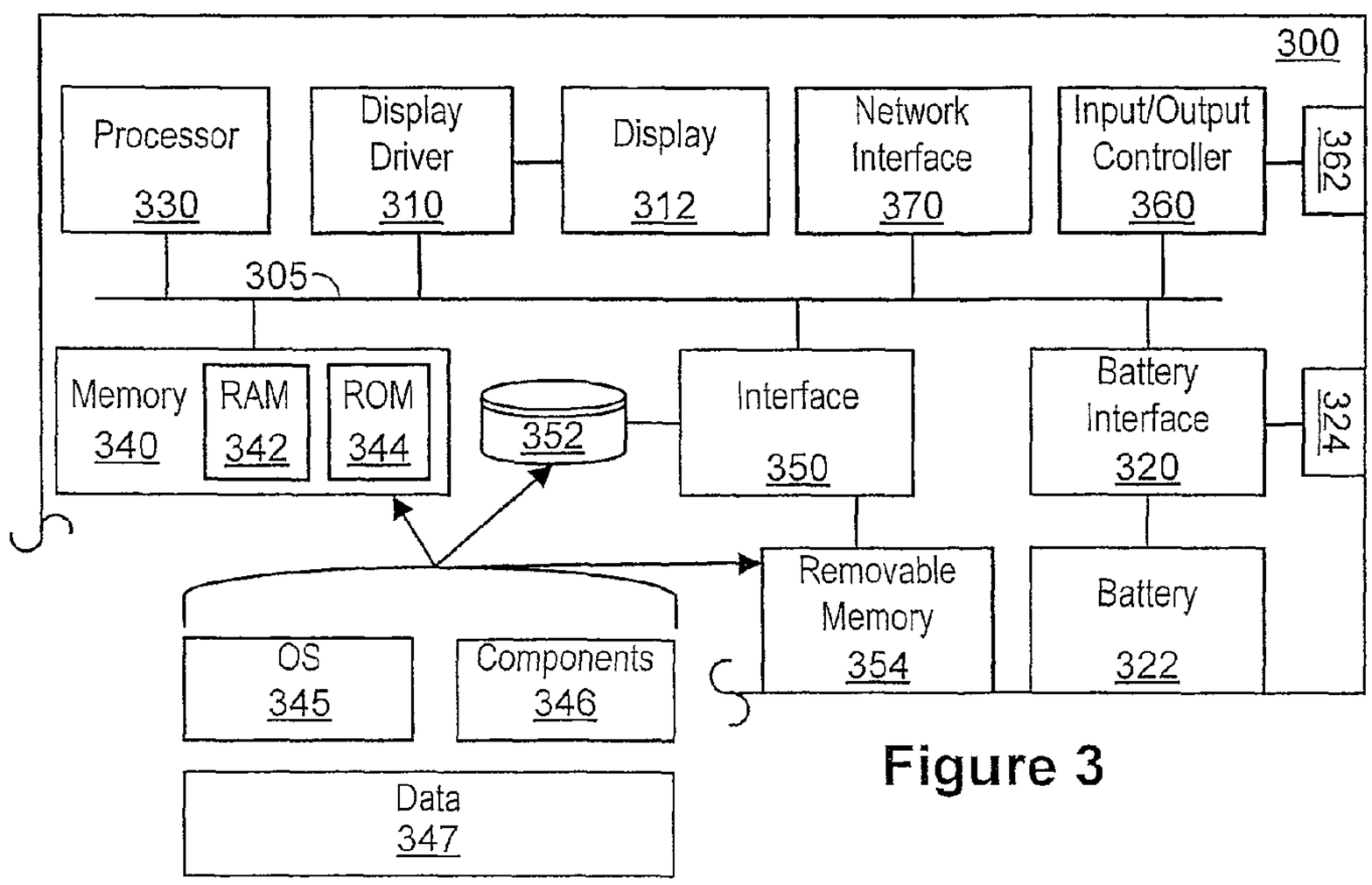


Figure 3

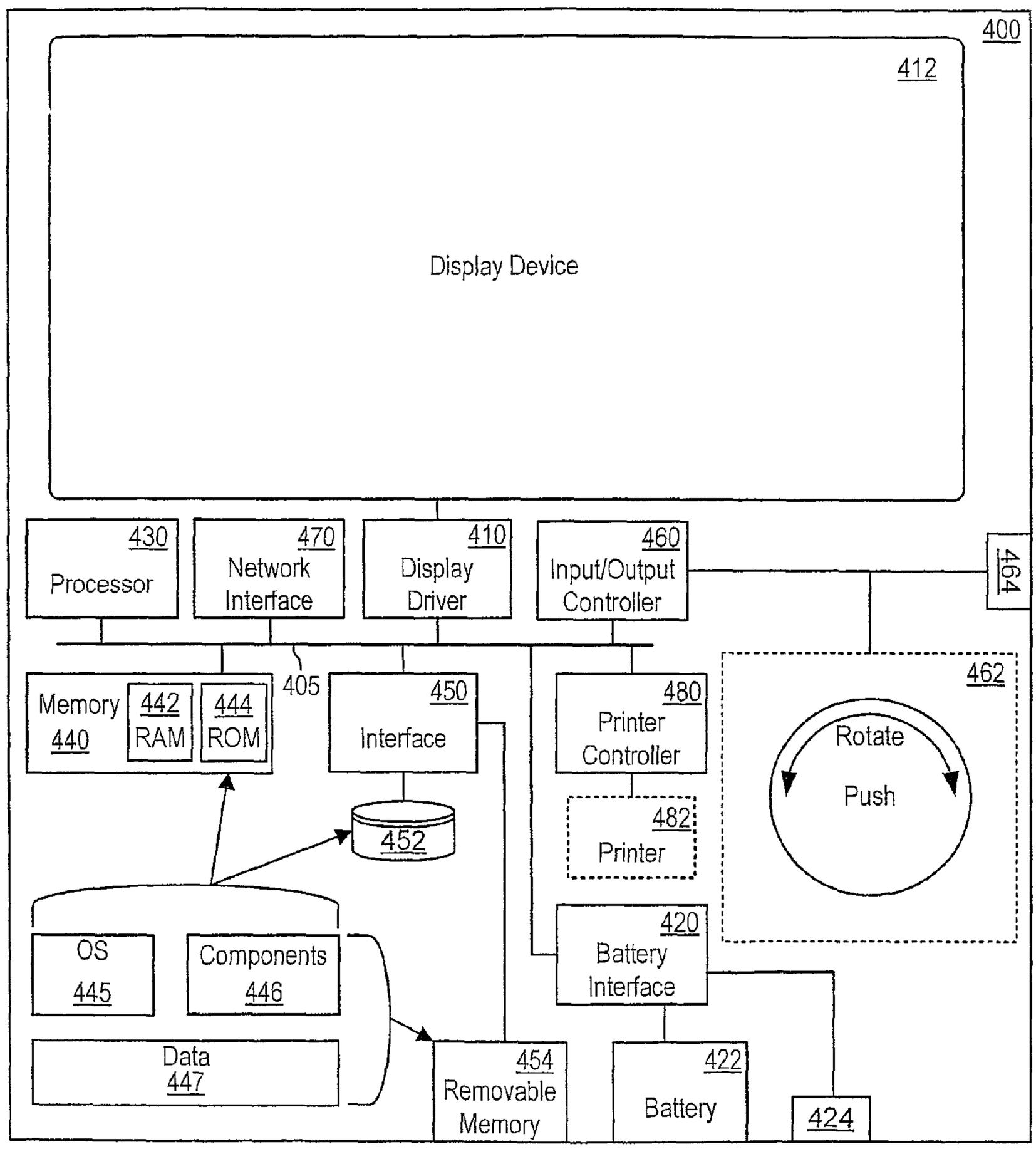
400
412
Display Device
430
Processor
470
Network Interface
410
Display Driver
460
Input/Output Controller
464
Memory 440
442 RAM
444 ROM
405
450
Interface
480
Printer Controller
462
Rotate
Push
452
482
Printer
OS 445
Components 446
Data 447
420
Battery Interface
454
Removable Memory
422
Battery
424

Figure 4

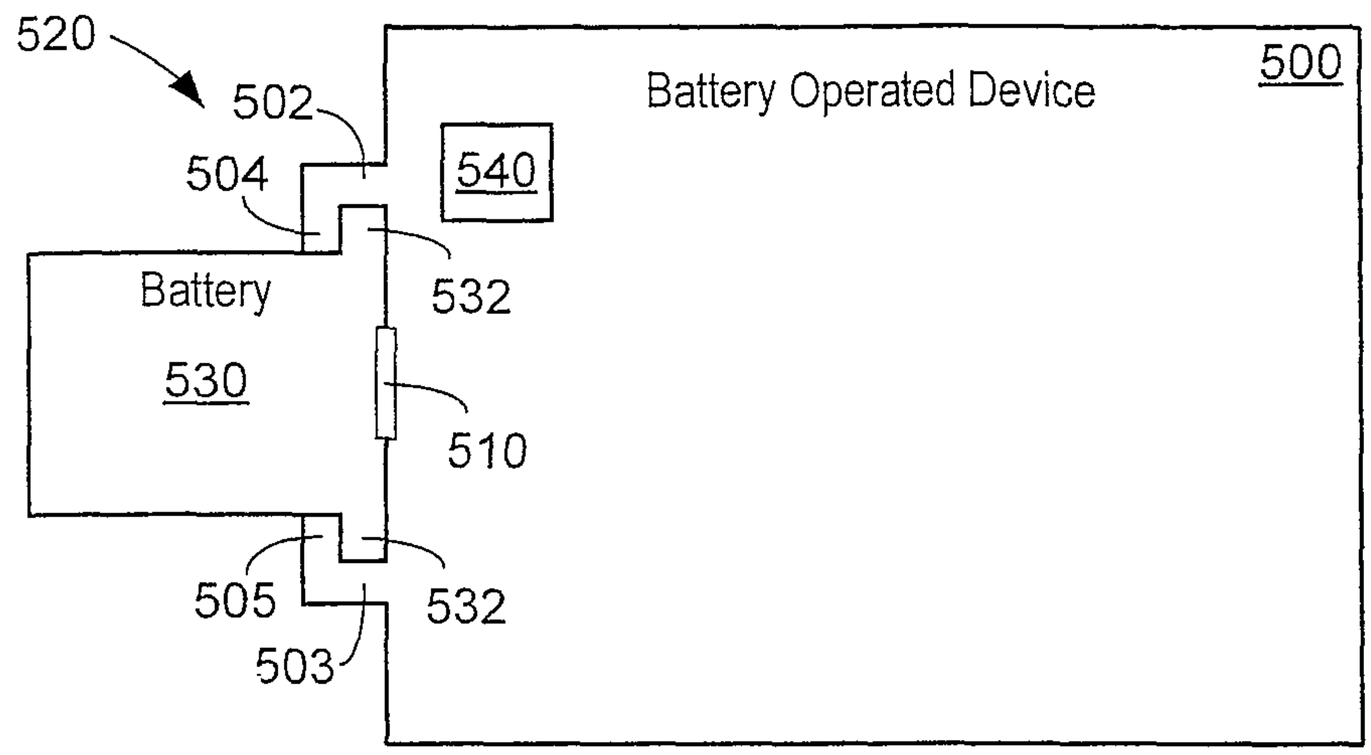


Figure 5A

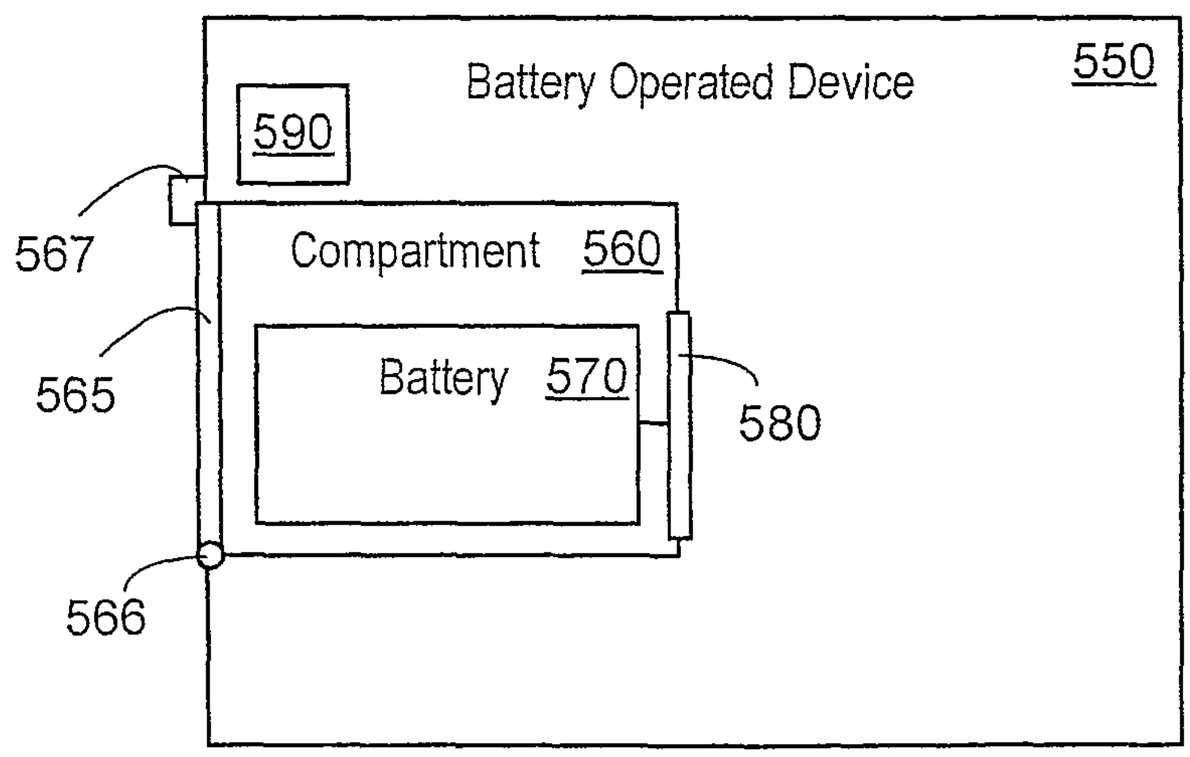


Figure 5B

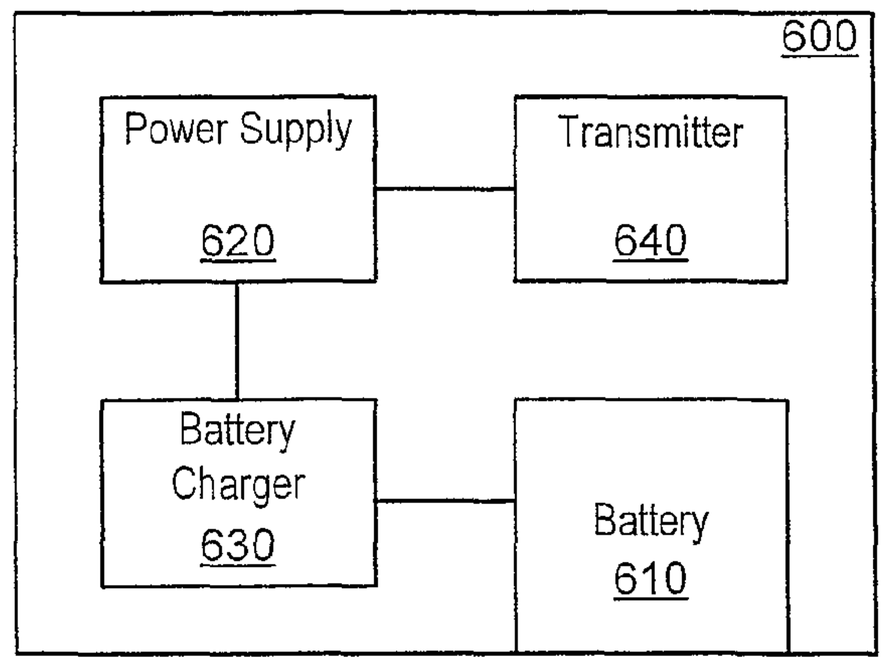


Figure 6

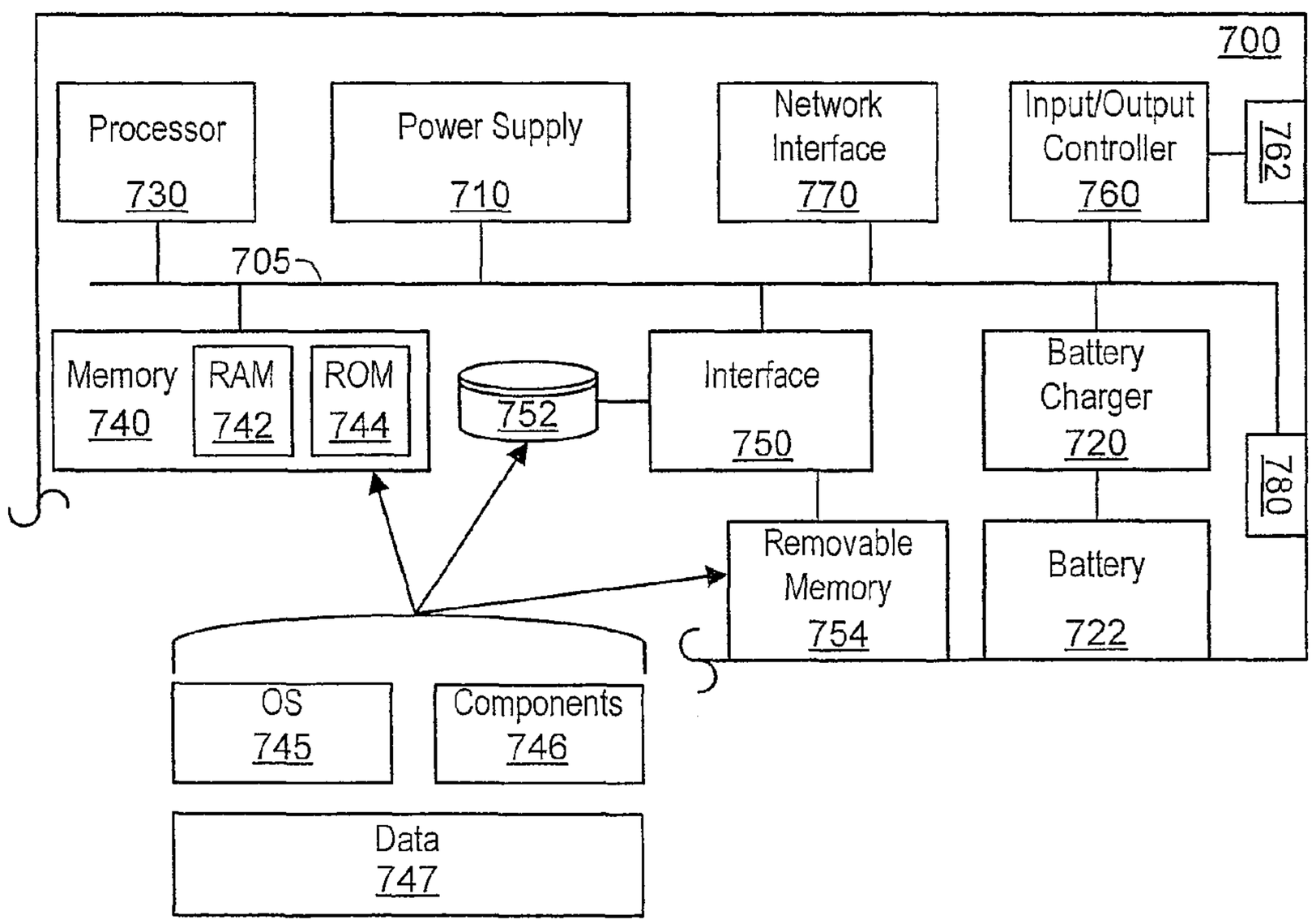


Figure 7

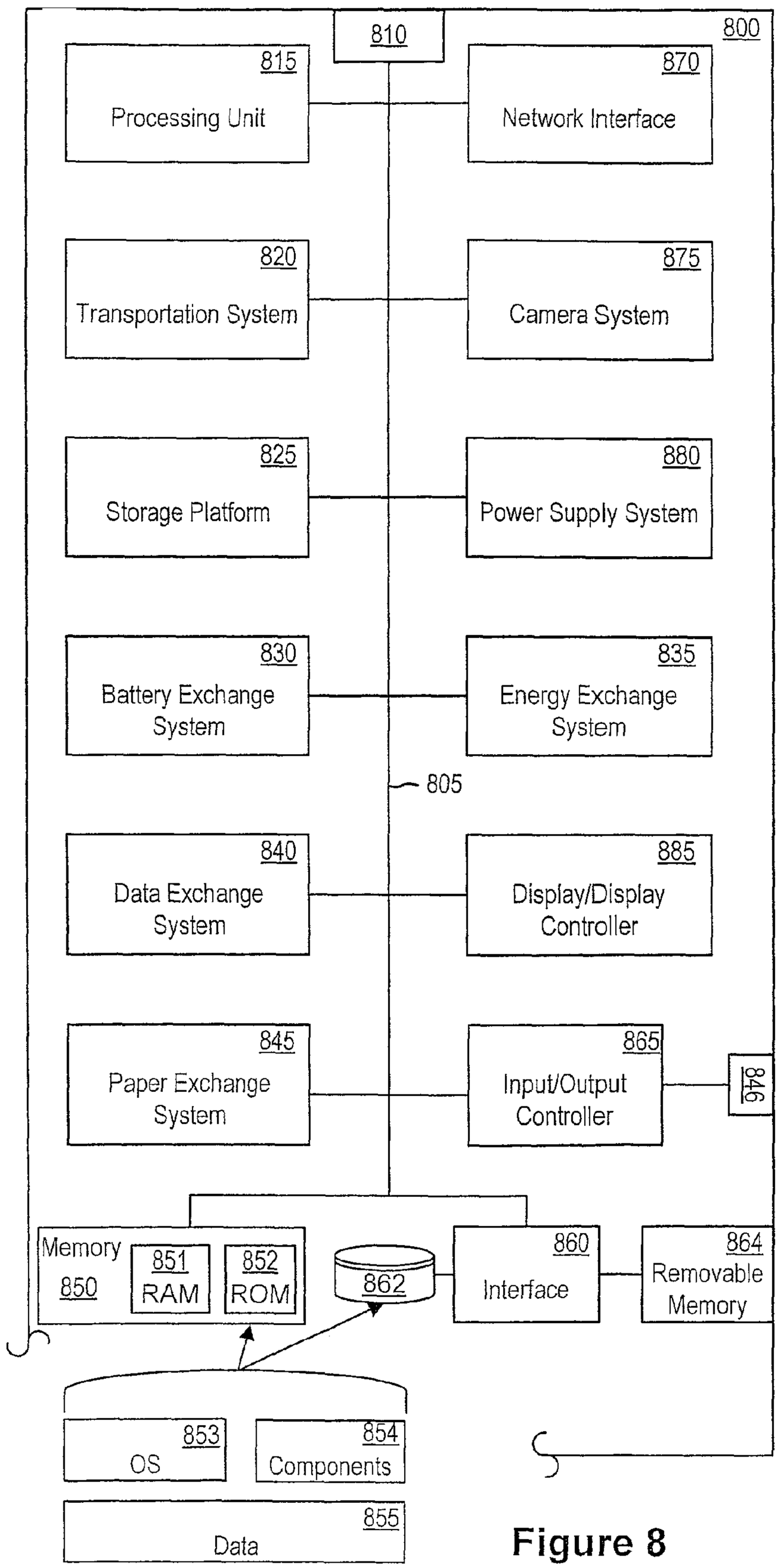
800
810
815
Processing Unit
870
Network Interface
820
Transportation System
875
Camera System
825
Storage Platform
880
Power Supply System
830
Battery Exchange System
835
Energy Exchange System
805
840
Data Exchange System
885
Display/Display Controller
845
Paper Exchange System
865
Input/Output Controller
846
Memory
850
851
RAM
852
ROM
862
860
Interface
864
Removable Memory
853
OS
854
Components
855
Data

Figure 8

# AUTOMATED BATTERY AND DATA DELIVERY SYSTEM

## RELATED APPLICATIONS

This application is a national stage application under 35 U.S.C. 371 of International Application No. PCT/CA2010/000557, filed Apr. 15, 2010, which claims the benefit under 35 U.S.C. §119(e) of U.S. Provisional Application No. 61/172,649, filed Apr. 24, 2009, which is hereby incorporated by reference in its entirety.

## TECHNICAL FIELD

This disclosure relates to delivering power and data to battery operated devices, such as kiosks and signage devices, in a retail environment and, more particularly, to an automated battery and data delivery system.

## BACKGROUND INFORMATION

Kiosks and digital signage devices are commonly available devices typically located in retail environments. Kiosks are computerized devices that allow customers to access information, place orders, and make purchases. Digital signage devices are electronic display devices that present information, advertising, and other messages to customers. Kiosks and digital signage devices require a source of power to operate and typically require an electrical receptacle to be installed nearby the kiosk or digital signage device. In addition, kiosks and digital signage devices generally require frequent data updates and may require a network connection to be installed nearby the kiosk or digital signage device or may require the retail environment to deploy a wireless network. The expertise, regulation, and costs associated with installing electrical receptacles, network connections, and wireless networks are prohibiting factors of installing kiosks and digital signage devices and can greatly limit the scope of kiosk and digital signage device deployments. Thus, the present inventor has recognized a need for improved systems and methods for delivering power and data to battery operated devices, such as kiosks and signage devices, in a retail environment.

## BRIEF DESCRIPTION OF THE DRAWINGS

FIGS. **1** and **2** are high-level block diagrams of automated power delivery systems, according to various embodiments.

FIGS. **3** and **4** are block diagrams showing operational components of battery operated devices, according to various embodiments.

FIGS. **5**A and **5**B are schematic diagrams of battery interfaces for battery operated devices, according to various embodiments.

FIGS. **6** and **7** are block diagrams showing operational components of base stations, according to various embodiments.

FIG. **8** is a block diagram showing operational components of a mobile robotic device, according to one embodiment.

## DETAILED DESCRIPTION OF PREFERRED EMBODIMENTS

With reference to the above-listed drawings, this section describes particular embodiments and their detailed construction and operation. The embodiments described herein are set forth by way of illustration only. In light of the teachings



herein, those skilled in the art will recognize that there may be equivalents to what is expressly or inherently taught herein. For example, variations can be made to the embodiments described herein and other embodiments are possible. It is not always practical to exhaustively catalog all possible embodiments and all possible variations of the described embodiments.

For the sake of clarity and conciseness, certain aspects of components or steps of certain embodiments are presented without undue detail where such detail would be apparent to those skilled in the art in light of the teachings herein and/or where such detail would obfuscate an understanding of more pertinent aspects of the embodiments.

FIG. **1** is a high-level block diagram of automated battery delivery system **100**, according to one embodiment. Automated battery delivery system **100** uses one or more mobile robotic devices **120** to deliver and exchange one or more batteries between a set of base stations **110**, which charge the batteries, and a set of battery operated devices **130**, which use the batteries as a power source. Mobile robotic devices **120** preferably operate autonomously within an operational environment, such as a retail environment. Thus, mobile robotic devices **120** automatically fetch, install, exchange, recharge, transport, and deliver rechargeable batteries to battery operated devices **130**. In addition, mobile robotic devices **120** may be configured to perform other transfers, such as data transfers and paper transfers. Further, mobile robotic devices **120** may be configured to perform a photographic and spatial survey of the isles, retail shelves, and surrounding environment for various purposes, such as generating three-dimensional store models (e.g., map the photographic data onto a three-dimensional store model for easy navigation) and remote viewing.

Automated battery delivery system **100** may include one or more base stations **110**. Base stations **110** are generally remotely located from battery operated devices **130**, such as in a storage room, warehouse, or other space that may be inaccessible to customers. Base stations **110** are electrically coupled to a power source, such as an electrical receptacle, and are configured to charge one or more batteries. Thus, base stations **110** function as battery recharging stations. Base stations **110** may include a transmitter to help guide a mobile robotic device to the base station. Base stations **110** may also include a network connection, such as an Internet connection, to exchange data with one or more central servers or remote data stores.

FIG. **2** is a high-level block diagram of automated energy delivery system **200**, according to one embodiment. Automated energy delivery system **200** uses one or more mobile robotic devices **220** to deliver electrical energy to a set of battery operated devices **230**. Mobile robotic devices **220** preferably include an energy storage device, such as a battery or capacitor, and charge the energy storage device using one or more power sources **210**, such as an electrical receptacle. Power sources **210** may be remotely located from battery operated devices **230** and may be located in areas that are accessible or inaccessible to customers (e.g., the power source may comprise the closest electrical receptacle). Thus, instead of delivering one or more batteries to battery operated devices **230**, mobile robotic devices **220** deliver electrical energy or a charge to battery operated devices **230**. The electrical energy may then be used to charge the battery operated device. Mobile robotic devices **220** preferably operate autonomously within an operational environment, such as a retail environment.

One or more of battery operated devices **130** or battery operated devices **230** may comprise a digital signage device.

FIG. **3** is a functional block diagram of one illustrative architecture of a digital signage device **300**. In FIG. **3**, a bus-based architecture is illustrated, based on a bus **305**. Other types of architectures are also suitable, such a direct connection between one or more of the components. A number of components interface to the bus **305**, including a display driver **310**, a battery interface **320**, a processor **330**, a memory **340**, a memory interface **350**, an input/output controller **360**, and a network interface **370**. Other versions of digital signage device **300** may omit one or more of these components, may contain additional components, or both.

Display driver **310** interfaces with processor **330** and a display **312** to present, for example, in textual form, graphical form, or both, data or other information stored in one or more of memories **340** and **352**. For example, display **312** may present information, advertising, and other messages. Display **312** may comprise any display device, such as an integrated cathode ray tube (CRT), liquid crystal display (LCD), or other display device.

Battery interface **320** interfaces with processor **330** and battery **322** to, for example, detect a charge level of battery **322**. If the charge level of battery **322** falls below a certain threshold, processor **330** may be configured to transmit via network interface **370** a message indicating that battery **322** needs replacing or needs to be recharged. Network interface **370** may directly communicate with any of mobile robotic devices **120** or **220** or may communicate with a central monitoring system, which may direct a mobile robotic device to service digital signage device **300**. Processor **330** may also be configured to transmit via a transmitter a signal indicative of the state of battery **322**. For example, if a charge level of battery **322** falls below a certain threshold, the transmitter may begin sending a signal indicating that a mobile robotic device should replace or charge battery **322**. By way of another example, the transmitter may transmit a signal when battery **322** has a normal charge level and stop transmitting the signal when a charge level of battery **322** falls below a certain threshold. Battery interface **320** may be omitted in certain embodiments.

According to a preferred embodiment, battery **322** comprises a rechargeable battery, such as a nickel-metal-hydride or lithium-ion battery, having a charge capacity sufficient to power digital signage device **300** for several hours (e.g., eight hours). However, battery **322** may comprise a non-rechargeable battery and may comprise any electrical or electrochemical device, such as galvanic cells or electrolytic cells. As will be described with reference to FIGS. **5**A and **5**B, battery **322** may be housed within a battery compartment of digital signage device **300** or may be externally coupled to digital signage device **300**. If battery **322** comprises a rechargeable battery, battery **322** may be recharged in a number of ways. For example, a mobile robotic device may physically detach or remove battery **322** from digital signage device **300** to allow charging by one of base stations **110**. By way of another example, an access port **324** may be provided so that a mobile robotic device can recharge battery **322** using the energy storage device within the mobile robotic device. Thus, battery interface **320** may include battery charging circuitry.

Processor **330** may be any form of processor and is preferably a digital processor, such as a general-purpose microprocessor or a digital signal processor (DSP), for example. Processor **330** may be readily programmable; hard-wired, such as an application specific integrated circuit (ASIC); or programmable under special circumstances, such as a programmable logic array (PLA) or field programmable gate array (FPGA), for example. Program memory for processor **330** may be integrated within processor **330**, may be part of memory **340**, or may be an external memory.

Processor **330** executes one or more programs to control the operation of the other components, to transfer data between the other components, to associate data from the various components together (preferably in a suitable data structure), to perform calculations using the data, to otherwise manipulate the data, and to present results to the customer. For example, processor **330** preferably executes a data presentation module for presenting information, advertising, and other messages to customers.

Digital signage device **300** further includes memory **340**, which may be implemented using one or more standard memory devices. The memory devices may include, for instance, RAM **342**, ROM **344**, or EEPROM devices, and may also include magnetic or optical storage devices, such as hard disk drives, CD-ROM drives, and DVD-ROM drives. Digital signage device **300** also includes memory interface **350** coupled to an internal hard disk drive **352**. Interface **350** may also be coupled to an internal drive, such as an optical disk drive, or an external drive, such as a drive coupled to digital signage device **300** over a USB, IEEE 1194, or PCMCIA connection. Interface **350** may also be coupled to a removable memory **354**, such as flash memory. According to one embodiment, a mobile robotic device is configured to exchange removable memory **354** with another removable memory having updated data, updated or additional program modules, or operating system updates. Thus, digital signage device **300** may receive software and data updates without the use of network interface **370**.

In one embodiment, any number of program modules are stored in the drives (e.g., drive **352**), ROM **344**, or removable memory **354**, including an operating system (OS) **345**, one or more program modules or components **346**, and data **347**. All or portions of the program modules may also be cached in RAM **342**. Any suitable operating system **345** may be employed. One of the program modules **346** may comprise a set of instructions for presenting information, advertising, and other messages to customers. Data **347** may comprise the information, advertising, or other messages presented to the customer.

Input/output controller **360** interfaces to one or more user input devices, such as one or more buttons or other controls. While the input devices may be integrated into digital signage device **300** and coupled to processor **330** via input/output controller **360**, the input devices may also connect via other interfaces, such as a connector **362**. Connector **362** may include one or more data interfaces, bus interfaces, wired or wireless network adapters, or modems for transmitting and receiving data. Accordingly, input/output controller **360** may include one or more of hardware, software, and firmware to implement one or more protocols, such as stacked protocols along with corresponding layers. Thus, connector **362** may function as a serial port (e.g., RS232), a Universal Serial Bus (USB) port, or an IR interface. Input/output controller **360** may also support various wired, wireless, optical, and other communication standards. According to one embodiment, a mobile robotic device is configured to transfer data to and from digital signage device **300** via connector **362** and input/output controller **360**. Thus, digital signage device **300** may receive software and data updates without the use of network interface **370** or removable memory **354**.

Network interface **370** may be provided to communicate with an external network. Network interface **370** may facilitate wired or wireless communication with other devices over a short distance (e.g., Bluetooth™) or nearly unlimited distances (e.g., the Internet). In the case of a wired connection, a

data bus may be provided using any protocol, such as IEEE 802.3 (Ethernet), advanced technology attachment (ATA), personal computer memory card international association (PCMCIA), or USB, for example. A wireless connection may use low or high powered electromagnetic waves to transmit data using any wireless protocol, such as Bluetooth™, IEEE 802.11b (or other WiFi standards), infrared data association (IrDa), or radio frequency identification (RFID), for example. Network interface **370** may be omitted in certain embodiments. Thus, digital signage device **300** may receive software and data updates via removable memory **354**, connector **362**, or both.

One or more of battery operated devices **130** or battery operated devices **230** may comprise a kiosk, such as a photo kiosk or another computer terminal that provides information and operational user interfaces for end users, such as staff or retail customers, to view or operate. Thus, the kiosks can be used to provide and collect information, provide instructions, perform look-ups and transactions, place orders, provide status, or display advertisements or information. The power and data needed to operate a kiosk may be delivered by one or more mobile robotic devices.

FIG. **4** is a functional block diagram of one illustrative architecture of a kiosk **400**. In FIG. **4**, a bus-based architecture is illustrated, based on a bus **405**. Other types of architectures are also suitable, such a direct connection between one or more of the components. A number of components interface to the bus **405**, including a display driver **410**, a battery interface **420**, a processor **430**, a memory **440**, a memory interface **450**, an input/output controller **460**, a network interface **470**, and a printer controller **480**. Other versions of kiosk **400** may omit one or more of these components, may contain additional components, or both.

Display driver **410** interfaces with processor **430** and a display **412** to present, for example, in textual form, graphical form, or both, data or other information stored in one or more of memories **440** and **452**. For example, kiosk **400** may present data, photographs, menus, prompts, indications, and otherwise communicate with the user via one or more display devices **412**. Display **412** may comprise any display device, such as an integrated cathode ray tube (CRT), liquid crystal display (LCD), or other display device.

Battery interface **420** interfaces with processor **430** and battery **422** to, for example, detect a charge level of battery **422**. If the charge level of battery **422** falls below a certain threshold, processor **430** may be configured to transmit via network interface **470** a message indicating that battery **422** needs replacing or needs to be recharged. Network interface **470** may directly communicate with any of the mobile robotic devices or may communicate with a central monitoring system, which may direct a mobile robotic device to service kiosk **400**. Processor **430** may also be configured to transmit via a transmitter a signal indicative of the state of battery **422**. For example, if a charge level of battery **422** falls below a certain threshold, the transmitter may begin sending a signal indicating that a mobile robotic device should replace or charge battery **422**. By way of another example, the transmitter may transmit a signal when battery **422** has a normal charge level and stop transmitting the signal when a charge level of battery **422** falls below a certain threshold. Battery interface **420** may be omitted in certain embodiments.

According to a preferred embodiment, battery **422** comprises a rechargeable battery, such as a nickel-metal-hydride or lithium-ion battery, having a charge capacity sufficient to power kiosk **400** for several hours (e.g., eight hours). However, battery **422** may comprise a non-rechargeable battery and may comprise any electrical or electrochemical device, such as galvanic cells or electrolytic cells. As will be described with reference to FIGS. **5**A and **5**B, battery **422** may be housed within a battery compartment of kiosk **400** or may be externally coupled to kiosk **400**. If battery **422** comprises a rechargeable battery, battery **422** may be recharged in a number of ways. For example, a mobile robotic device may physically detach or remove battery **422** from kiosk **400** to allow charging by a base station. By way of another example, an access port **424** may be provided so that a mobile robotic device can recharge battery **422** using the energy storage device within the mobile robotic device. Thus, battery interface **420** may include battery charging circuitry.

Processor **430** executes one or more programs to control the operation of the other components, to transfer data between the other components, to associate data from the various components together (preferably in a suitable data structure), to perform calculations using the data, to otherwise manipulate the data, and to present results to the customer. For example, processor **430** preferably executes a one or more modules that provide and collect information, provide instructions, perform look-ups and transactions, place orders, provide status, or display advertisements or information.

Kiosk **400** further includes memory **440**, which may be implemented using one or more standard memory devices. The memory devices may include, for instance, RAM **442**, ROM **444**, or EEPROM devices, and may also include magnetic or optical storage devices, such as hard disk drives, CD-ROM drives, and DVD-ROM drives. Kiosk **400** also includes memory interface **450** coupled to an internal hard disk drive **452**. Interface **450** may also be coupled to an internal drive, such as an optical disk drive, or an external drive, such as a drive coupled to kiosk **400** over a USB, IEEE 1194, or PCMCIA connection. Interface **450** may also be coupled to a removable memory **454**, such as flash memory. According to one embodiment, a mobile robotic device is configured to exchange removable memory **454** with another removable memory having updated data, updated or additional program modules, or operating system updates. If removable memory **454** has stored thereon data from a user interaction (e.g., order parameters provided by the user), the mobile robotic device may install removable memory **454** into a base station **110** so that the data can be transmitted to a central server. In addition, the mobile robotic device may have a memory interface so that the mobile robotic device can directly read the data stored on removable memory **454** and transmit the data to a central server. Thus, kiosk **400** may provide and collect information, provide instructions, perform look-ups and transactions, place orders, provide status, or display advertisements or information without the use of network interface **470**.

In one embodiment, any number of program modules are stored in the drives (e.g., drive **452**), ROM **444**, or removable memory **454**, including an operating system (OS) **445**, one or more program modules or components **446**, and data **447**. All or portions of the program modules may also be cached in RAM **442**. Any suitable operating system **445** may be employed. One of the program modules **446** may comprise a set of instructions that provide and collect information, provide instructions, perform look-ups and transactions, place orders, provide status, or display advertisements or information. Data **447** may comprise the provided and collected information, provided instructions, data for performing look-ups and transactions, placed orders, status data, or the advertisements or other information to be displayed.

Input/output controller **460** interfaces to one or more user input devices, such as one or more buttons or other controls.

An axially displaceable rotational input device, such as a rotary push knob **462** may be coupled to processing unit **430** via input/output controller **460** and bus **405**. By rotating rotary push knob **462**, the user adjusts certain parameters (e.g., color, brightness, and contrast) or navigates various menus (e.g., user prompts). By depressing rotary push knob **462**, the user switches from one parameter to another or selects a desired menu or prompt. Rotary push knob **462** may be integrated into an enclosure of kiosk **400** or rotary push knob **462** may connect to kiosk **400** via other interfaces, such a connector **464**. Likewise, kiosk **400** may include other input devices coupled to input/output controller **460**, such as a keypad or keyboard, a pointing device, a trackball, or other wired or wireless input devices. Accordingly, input/output controller **460** may include hardware, software, firmware, or any combination thereof, to implement one or more protocols, such as stacked protocols along with corresponding layers. Thus, input/output controller **460** may function as a RS232 port, a USB port, an ethernet port, a parallel port, an IEEE 1394 serial port, and an IR interface. Input/output controller **460** may also support various wired, wireless, optical, and other communication standards. While the input devices may be integrated into kiosk **400** and coupled to processor **430** via input/output controller **460**, the input devices may also connect via other interfaces, such as connector **464**. According to one embodiment, a mobile robotic device is configured to transfer data to and from kiosk **400** via connector **464** and input/output controller **460**. Thus, kiosk **400** may provide and collect information, provide instructions, perform look-ups and transactions, place orders, provide status, or display advertisements or information without the use of network interface **470** or removable memory **454**.

Network interface **470** may be provided to communicate with an external network and one or more remote servers or data stores. Network interface **470** may facilitate wired or wireless communication with other devices over a short distance (e.g., Bluetooth™) or nearly unlimited distances (e.g., the Internet). In the case of a wired connection, a data bus may be provided using any protocol, such as IEEE 802.3 (Ethernet), advanced technology attachment (ATA), personal computer memory card international association (PCMCIA), or USB, for example. A wireless connection may use low or high powered electromagnetic waves to transmit data using any wireless protocol, such as Bluetooth™, IEEE 802.11b (or other WiFi standards), infrared data association (IrDa), or radio frequency identification (RFID), for example. Network interface **470** may be omitted in certain embodiments. Thus, kiosk **400** may transfer data via removable memory **454**, connector **464**, or both.

Kiosk **400** may also include printer controller **480** to interface with a printer **482** (e.g., via a bi-direction port, such as a IEEE 1284 parallel port, or a wired or wireless network connection). Printer **482** may be used to print orders (e.g., photographs), instructions, maps, price quotes, coupons, advertisements, order confirmations, or receipts. According to one embodiment, one or more of mobile robotic devices **120** or **220** are configured to deliver paper to printer **482** and install paper in printer **482**.

According to a preferred embodiment, battery operated devices **130** and **230** include a mechanical fastener for coupling and securely holding the battery to the battery operated device. The mechanical fastener preferably resists manual tampering (e.g., by customers) and accidental dislocation. The mobile robotic devices are configured to release and set the mechanical fastener when exchanging the battery. A transmitter may be positioned proximate the mechanical fastener to help guide a mobile robotic device toward the battery operated device, the mechanical fastener, or both.

FIG. **5**A is a schematic diagram of a battery operated device **500** including an electrical battery interface **510** and a mechanical fastener **520** for electrically and mechanically coupling a battery **530** to battery operated device **500**, according to one embodiment. Battery **530** may be externally mounted to battery operated device or may be partially or fully set within battery operated device **500**. Electrical battery interface **510** may comprise any suitable interface that electrically couples a battery **530** to battery operated device **500**. For example, electrical battery interface **510** may comprise an electrical connector, such as plug and socket connector or a male or female contact device that is configured to supply electrical energy from battery **530** to battery operated device **500**.

Mechanical fastener **520** may comprise any device or coupling that mechanically joins or affixes two or more objects together. For example, mechanical fastener **520** may comprise lateral side walls **502** and **503** and interlocking shoulders **504** and **505** of battery operated device **500**. Lateral side walls **502** and **503** and interlocking shoulders **504** and **505** engage a shoulder or flange protrusion **532** of battery **530** to secure battery **530** to battery operated device **500**. An opening may extend orthogonal to lateral side walls **502** and **503** (e.g., proximate the top of battery operated device **500**) so that battery **530** may be slid downward (e.g., from the top of battery operated device **500**) into engagement with interlocking shoulders **504** and **505**. Alternatively, a lateral opening may be provided so that battery **530** may be laterally slid into engagement with interlocking shoulders **504** and **505**. Further, a side wall and interlocking shoulder may surround battery **530** and interlocking shoulder may comprise one or more spaced apart flanges that mesh with flange protrusions on battery **530** so that battery **530** may be inserted into the sidewall and twisted to lock battery **530** in place. Mechanical fastener **520** may also comprise another device, such as a latch, pin, or hook-and-loop fastener.

Battery operated device **500** may optionally include one or more transmitters **540** (e.g., an infrared emitter) positioned proximate mechanical fastener **520** to help guide a mobile robotic device toward battery operated device **500**, mechanical fastener **520**, or both.

FIG. **5**B is a schematic diagram of a battery operated device **550** including a compartment **560** for housing a battery **570**, according to one embodiment. An electrical battery interface **580** is provided to electrically couple battery **570** to battery operated device **550**. Electrical battery interface **580** may comprise any suitable interface that electrically couples battery **570** to battery operated device **550**. For example, electrical battery interface **580** may comprise an electrical connector, such as plug and socket connector or a male or female contact device that is configured to supply electrical energy from battery **570** to battery operated device **550**. A door or access panel **565** provides access to compartment **560**. A hinge **566** and a mechanical fastener **567** may be provided to secure access panel **565** to battery operated device **550**. Mechanical fastener **567** may comprise any device or coupling that mechanically joins or affixes two or more objects together, such as a latch. The mobile robotic devices are configured to release and set mechanical fastener **567** when exchanging the battery. Battery operated device **550** may optionally include one or more transmitters **590** (e.g., an infrared emitter) positioned proximate mechanical fastener **567** to help guide a mobile robotic device toward battery operated device **550**, mechanical fastener **567**, or both.

FIG. **6** is a functional block diagram showing operational components of a base station **600**, according one embodiment. Base station **600** is preferably electrically coupled to a power source, such as an electrical receptacle, and is configured to charge one or more batteries **610**. Thus, base station **600** may include a power supply **620** and battery charging circuitry **630**. Power supply **620** converts the voltage available from the power source (e.g., line voltage) into a voltage suitable for battery charging circuitry **630**. Battery charging circuitry **630** may comprise any suitable circuitry for charging one or more batteries and may comprise circuitry to prevent overcharging the batteries. An electrical battery interface may be provided to electrically couple one or more batteries **610** to base station **600**. The electrical battery interface may be similar or identical to any of the electrical battery interfaces described with reference to FIGS. **5**A and **5**B. Base station **600** may also include a mechanical fastener for coupling and securely holding one or more batteries **610** to base station **600**. The mechanical fastener may be similar or identical to any of the mechanical fasteners described with reference to FIGS. **5**A and **5**B. The mobile robotic devices are configured to attach one or more batteries to base station **600** for charging and remove charged batteries from base station **600**. Thus, it may be desirable to incorporate in the base station the same electrical battery interface and mechanical fastener that are used with the battery operated device to simplify the design of the battery exchange system of the mobile robotic device.

The mobile robotic devices are preferably configured to determine whether a battery is charged before removing the battery from base station **600**. According to one embodiment, the mobile robotic devices wait a predetermined period of time before removing a battery from base station **600**. For example, the amount of time to fully charge a depleted battery using base station **600** may be known (e.g., based on a charge capacity of the battery and a battery charging rate of the base station). Thus, a mobile robotic device may have data stored in a memory indicating how long it should take to charge a fully depleted battery. After the mobile robotic device attaches a battery to base station **600**, the mobile robotic device may start a charge timer or store an indication of when a particular battery was attached to base station **600**. The mobile robotic device will then wait a sufficient amount of time before removing the battery from base station **600** (e.g., the amount of time it should take to charge a fully depleted battery). According to another embodiment, battery charging circuitry **630** is configured to detect a charge level of battery **610** and provide an indication of which batteries (if any) are charged. For example, if a charge level of battery **610** rises above a certain threshold, a transmitter **640** may begin sending a signal indicating that battery **610** is charged and that a mobile robotic device can remove battery **610** from base station **600**. By way of another example, transmitter **640** may transmit a signal when a charge level of battery **610** is below a certain threshold and stop transmitting the signal when a charge level of battery **610** rises above the threshold.

Transmitter **640** may be positioned proximate the mechanical fastener to help guide a mobile robotic device toward base station **600**, the mechanical fastener, or both. According to a preferred embodiment, transmitter **640** comprises an infrared emitter that functions as an identity and location beacon for the mobile robotic devices. According to another embodiment, an antenna is coupled to transmitter **640** and transmitter **640** comprises a power source and radio frequency (RF) oscillator to drive the antenna with a signal that causes the antenna to radiate one or more RF signals. Because the RF signal(s) may only need to travel a short distance from the antenna, the power requirements for the transmitter may be relatively modest.

FIG. **7** is a functional block diagram showing operational components of a base station **700**, according one embodiment. Base station **700** is preferably configured to transfer data (e.g., via a network interface **770**) between one or more central data sources and a memory of base station **700**. Thus, a mobile robotic device can transfer data between base station **700** and one or more of the battery operated devices (e.g., if the battery operated device does not include a network interface).

In FIG. **7**, a bus-based architecture is illustrated, based on a bus **705**. Other types of architectures are also suitable, such a direct connection between one or more of the components. For example, a power supply **710** may be electrically coupled to each of the components. A number of components interface to the bus **705**, including power supply **710**, a battery charger **720**, a processor **730**, a memory **740**, a memory interface **750**, an input/output controller **760**, network interface **770**, and a transmitter **780**. Other versions of base station **700** may omit one or more of these components, may contain additional components, or both.

Base station **700** is preferably electrically coupled to a power source, such as an electrical receptacle, and is configured to charge one or more batteries **722**. Thus, base station **700** may include power supply **710** and battery charging circuitry **720**. One or more of batteries **722** may be similar or identical to battery **322** or battery **422** described with reference to FIGS. **3** and **4**. Power supply **710** converts the voltage available from the power source (e.g., line voltage) into a voltage suitable for battery charging circuitry **720** (and the other components). Battery charging circuitry **720** may comprise any suitable circuitry for charging one or more batteries and may comprise circuitry to prevent overcharging the batteries. An electrical battery interface may be provided to electrically couple one or more batteries **722** to base station **700**. The electrical battery interface may be similar or identical to any of the electrical battery interfaces described with reference to FIGS. **5**A and **5**B. Base station **700** may also include a mechanical fastener for coupling and securely holding one or more batteries **722** to base station **700**. The mechanical fastener may be similar or identical to any of the mechanical fasteners described with reference to FIGS. **5**A and **5**B. The mobile robotic devices are configured to attach one or more batteries to base station **700** for charging and remove charged batteries from base station **700**. Thus, it may be desirable to incorporate in the base station the same electrical battery interface and mechanical fastener that are used with the battery operated device to simplify the design of the battery exchange system of the mobile robotic device.

The mobile robotic devices are preferably configured to determine whether a battery is charged before removing the battery from base station **700**. For example, the mobile robotic devices wait a predetermined period of time before removing a battery from base station **700** as described with reference to FIG. **6**. In addition, base station **700** may be configured to transmit via network interface **770** an indication of which batteries (if any) are charged and ready to be removed. For example, battery charging circuitry **720** may be configured to detect a charge level of battery **722** and provide an indication of which batteries (if any) are charged. Base station **700** can directly relay to a mobile robotic device (e.g., via network interface **770**) the battery charge status or can relay to a central monitoring system the battery charge status.

Processor **730** may be any form of processor and is preferably a digital processor, such as a general-purpose micro-

processor or a digital signal processor (DSP), for example. Processor **730** may be readily programmable; hard-wired, such as an application specific integrated circuit (ASIC); or programmable under special circumstances, such as a programmable logic array (PLA) or field programmable gate array (FPGA), for example. Program memory for processor **730** may be integrated within processor **730**, may be part of memory **740**, or may be an external memory.

Processor **730** executes one or more programs to control the operation of the other components, to transfer data between the other components, to associate data from the various components together (preferably in a suitable data structure), to perform calculations using the data, to otherwise manipulate the data, and to present results to the customer. For example, processor **730** may execute a data transfer module, a battery charge status module, and a mobile robotic device guidance module. The data transfer module may be configured to transfer data between a data source and base station **700**. The data may comprise advertising data and other messages that digital signage device displays. In addition, the data may comprise data for performing look-ups and transactions, data for placing orders, status data, or advertising data that a kiosk uses. The battery charge status module may be configured to provide an indication of which batteries (if any) are charged and ready to be removed. The mobile robotic device guidance module may be configured to help guide a mobile robotic device toward base station **700**.

Base station **700** further includes memory **740**, which may be implemented using one or more standard memory devices. The memory devices may include, for instance, RAM **742**, ROM **744**, or EEPROM devices, and may also include magnetic or optical storage devices, such as hard disk drives, CD-ROM drives, and DVD-ROM drives. Base station **700** may also include memory interface **750** coupled to an internal hard disk drive **752**. Interface **750** may also be coupled to an internal drive, such as an optical disk drive, or an external drive, such as a drive coupled to base station **700** over a USB, IEEE 1194, or PCMCIA connection. Interface **750** may also be coupled to a removable memory **754**, such as flash memory. According to one embodiment, the mobile robotic devices are configured to exchange removable memory **754** with another removable memory. A mobile robotic device can deliver removable memory **754** to one or more of the battery operated devices so that the battery operated device can receive software and data updates without the use of a network interface.

In one embodiment, any number of program modules are stored in the drives (e.g., drive **752**), ROM **744**, or removable memory **754**, including an operating system (OS) **745**, one or more program modules or components **746**, and data **747**. All or portions of the program modules may also be cached in RAM **742**. Any suitable operating system **745** may be employed. One of the program modules **746** may comprise a set of instructions for implementing the data transfer module, the battery charge status module, and the mobile robotic device guidance module. Data **747** may comprise the charge status data and the data that will be transferred by a mobile robotic device between base station **700** and a battery operated device.

Input/output controller **760** interfaces to one or more user input devices, such as one or more buttons or other controls. While the input devices may be integrated into base station **700** and coupled to processor **730** via input/output controller **760**, the input devices may also connect via other interfaces, such as a connector **762**. Connector **762** may include one or more data interfaces, bus interfaces, wired or wireless network adapters, or modems for transmitting and receiving data. Accordingly, input/output controller **760** may include one or more of hardware, software, and firmware to implement one or more protocols, such as stacked protocols along with corresponding layers. Thus, connector **762** may function as a serial port (e.g., RS232), a Universal Serial Bus (USB) port, or an IR interface. Input/output controller **760** may also support various wired, wireless, optical, and other communication standards. According to one embodiment, a mobile robotic device is configured to transfer data between the mobile robotic device and base station **700**. Thus, data can be transferred between the mobile robotic device and base station **700** using connector **762** and input/output controller **760**. The mobile robotic device can then transfer the data to a battery operated device, which allows the battery operated device to receive data without the use of a network interface or removable memory **754**. Likewise, the mobile robotic device may download data from the battery operated device (e.g., one or more orders placed by customers) and deliver the data to base station **700**.

Network interface **770** may be provided to communicate with an external network so that base station **700** can exchange data with a central server. For example, one or more of the battery operated devices may not include a network interface and may instead rely on receiving data updates from a mobile robotic device (e.g., via a removable memory or a data transfer between the mobile robotic device and the battery operated device). Thus, base station **700** may download updated software, data, or both, and store the updates on removable memory **754** (or transfer the updates to a mobile robotic device via input/output controller **760**) so that a mobile robotic device can deliver the updates to one or more battery operated devices. Network interface **770** may facilitate wired or wireless communication with other devices over a short distance (e.g., Bluetooth™) or nearly unlimited distances (e.g., the Internet). In the case of a wired connection, a data bus may be provided using any protocol, such as IEEE 802.3 (Ethernet), advanced technology attachment (ATA), personal computer memory card international association (PCMCIA), or USB, for example. A wireless connection may use low or high powered electromagnetic waves to transmit data using any wireless protocol, such as Bluetooth™, IEEE 802.11b (or other WiFi standards), infrared data association (IrDa), or radio frequency identification (RFID), for example. Network interface **770** may be omitted in certain embodiments.

Transmitter **780** may be positioned proximate the mechanical fastener to help guide a mobile robotic device toward base station **700**, the mechanical fastener, or both. Transmitter **780** may be similar or identical to transmitter **640** described with reference to FIG. **6**. In certain embodiments, one or more of the mobile robotic devices are configured to deliver paper to a printer associated with a battery operated device and install paper in the printer. Thus, base station **700** may contain a source of paper to be delivered to one or more printers.

FIG. **8** is a block diagram showing operational components of a mobile robotic device **800**, according to one embodiment. Mobile robotic device **800** is configured to move through an operating environment between one or more battery operated devices and one or more base stations to deliver a charged battery to a battery operated device, according to one embodiment. Thus, mobile robotic device **800** is configured to find and locate one or more batteries installed on a battery operated device, physically remove any installed batteries, and install charged batteries on the battery operated device. According to another embodiment, mobile robotic device **800**

is configured to move through an operating environment to deliver electrical energy to a battery operated device.

In FIG. **8**, a bus-based architecture is illustrated, based on a bus **805**. Other types of architectures are also suitable, such a direct connection between one or more of the components. For example, a power supply **880** may be electrically coupled to each of the components. A number of components interface to the bus **805**, including a receiver **810**, a processing unit **815**, a transportation system **820**, a storage platform **825**, a battery exchange system **830**, a energy exchange system **835**, a data exchange system **840**, a paper exchange system **845**, a memory **850**, a memory interface **860**, an input/output controller **865**, a network interface **870**, a camera system **875**, power supply system **880**, and a display controller **885**. Other versions of mobile robotic device **800** may omit one or more of these components, may contain additional components, or both. For example, mobile robotic device **800** may include battery exchange system **830** but not energy exchange system **835** and vice versa. Other elements known in the art, such as a structural framework for interconnecting and supporting the components are included with mobile robotic device **800**, but not shown in FIG. **8** for clarity of illustration.

Receiver **810** may be provided to help guide mobile robotic device **800** toward a base station, a battery operated device, or both. Receiver **810** may be positioned proximate battery exchange system **830**, energy exchange system **835**, data exchange system **840**, or paper exchange system **845** to help guide one or more components of the respective system toward an appropriate portion of the base station or battery operated device. For example, receiver **810** may be positioned on or proximate a mechanical fastener actuator associated with battery exchange system **830** to help guide the mechanical fastener actuator toward a mechanical fastener on the base station or battery operated device. In addition more than one receiver may be provided, such as a receiver proximate each of battery exchange system **830**, energy exchange system **835**, data exchange system **840**, and paper exchange system **845**, to help guide the respective system toward an appropriate portion of the base station or battery operated device.

According to a preferred embodiment, receiver **810** comprises an infrared receiver configured to identify an infrared signal emitted from the base station or battery operated device (e.g., from an infrared transmitter). According to another embodiment, an antenna, such as a directional antenna, is coupled to receiver **810**. Receiver **810** monitors the antenna for the RF signal(s) radiated by the base station or battery operated device (e.g., from a transmitting antenna and corresponding transmitter). The receiver **810** may comprise a wideband filter, an amplifier, and a comparator. The antenna may be coupled to the amplifier via the wideband filter, which is configured to eliminate or filter out unwanted low and high frequency signals which are outside of a preselected range. The comparator then monitors the output from the amplifier for a change in voltage caused by a change in the RF signal(s). The comparator is preferably configured to change states after mobile robotic device **800** or a portion thereof is within a predetermined distance of the base station, battery operated device, or an appropriate section of the base station or battery operated device (e.g., the mechanical fastener).

Processor **815** may be any form of processor and is preferably a digital processor, such as a general-purpose microprocessor or a digital signal processor (DSP), for example. Processor **815** may be readily programmable; hard-wired, such as an application specific integrated circuit (ASIC); or programmable under special circumstances, such as a programmable logic array (PLA) or field programmable gate array (FPGA), for example. Program memory for processor **815** may be integrated within processor **815**, may be part of memory **850**, or may be an external memory.

Processor **815** executes one or more programs to control the operation of the other components, to transfer data between the other components, to associate data from the various components together (preferably in a suitable data structure), to perform calculations using the data, to otherwise manipulate the data, and to present results to the customer. Processor **815** preferably executes one or more modules that implement the activities of mobile robotic device **800** described herein. For example, processor **815** may execute a transportation module for moving mobile robotic device **800** between a base station and a battery operated device and a battery exchange module that effects replacing a discharged battery on a battery operated device with a charged battery.

Transportation system **820** is configured to transport mobile robotic device **800** between prescribed points. Transportation system **820** may comprise any number of components or mechanisms that effect movement of mobile robotic device **800**. For example, transportation system **820** may comprise a motor for driving one or more wheels or continuous tracks. The motor may be controlled with a motor control system and powered by power supply system **880**, which may comprise one or more batteries. The motor control system may be coupled to one or more directional sensors or other sensors. For example, one or more proximity sensors may be provided to help mobile robotic device **800** avoid objects while traveling between a battery operated device and a base station. By way of another example, one or more gyroscopes may be provided to monitor and control a direction of travel of mobile robotic device **800**. By way of yet another example, one or more sensors may be provided so that mobile robotic device **800** can travel between battery operated device and a base station using a positioning system (e.g., a GPS or positioning system installed within the operating environment).

According to one embodiment, mobile robotic device **800** includes storage platform or portion **825** to support one or more items or objects during transport. Storage platform **825** may be disposed within or externally disposed on mobile robotic device **800**. For example, storage platform **825** may be externally disposed so that a battery manipulation mechanism can remove a battery from a base station or a battery operated device and place the removed battery on storage platform **825**. Storage platform **825** may be sized and designed to support or store a variety objects as mobile robotic device **800** moves from one location to another. For example, storage platform **825** may be configured to support any combination of a set of batteries (e.g., one or more charged or discharged batteries), a set of removable memories (e.g., one or more removable memories having software updates or data stored thereon), and paper (e.g., paper to be delivered to one or more printers associated with the battery operated devices). Storage platform **825** may also include one or more compartments, containers, or baskets to keep the objects separated and inhibit the objects from shifting (relative to the platform) during transport. According to one embodiment, storage platform **825** includes one or more sensors to monitor how many items are disposed on storage platform **825**. For example, storage platform **825** may include a weigh scale to ensure storage platform **825**, mobile robotic device **800**, or both, do not become overloaded.

According to one embodiment, battery exchange system **830** is provided to remove from a battery operated device a rechargeable battery (which may be fully or partially discharged) and couple to the battery operated device a charged battery (which may be fully or partially charged) from storage

platform **825**. In addition, battery exchange system **830** removes from a base station a charged battery and couples to the base station a discharged battery from storage platform **825** so that the battery can be recharged. Battery exchange system **830** preferably includes a battery manipulating mechanism configured to support and transport a battery between the battery operated device or base station and storage platform **825**. For example, battery exchange system **830** may detachably couple the battery manipulating mechanism to the battery and instruct the battery manipulating mechanism to move the battery from one location to another (e.g., between the battery operated device and the storage platform). Thus, the battery manipulating mechanism may comprise a mechanical or electromechanical gripping mechanism for grabbing and supporting the battery, a mechanical or electromechanical travel mechanism or arm for moving the gripping mechanism (and thus the battery) between prescribed locations, and one or more motors and motor control systems to effect the desired motion. Battery exchange system **830** may also include a mechanical fastener actuator for engaging and disengaging a mechanical fastener (e.g., one of the mechanical fasteners described with reference to FIGS. **5**A and **5**B) or latch coupling the battery to the battery operated device or base station. For example, the mechanical fastener actuator may comprise an extension coupled to the battery manipulating mechanism and configured to adjusts a position of the mechanical fastener (or a portion thereof) so that the battery can be removed from or attached to the battery operated device or base station.

Battery exchange system **830** may also include an elevation mechanism for adjusting a vertical position of any portion of battery exchange system **830** or mobile robotic device **800**. For example, a battery operated device, such as a signage device, may be mounted at ceiling height or another height relative to mobile robotic device **800**. Thus, elevation mechanism may move battery exchange system **830** (or a portion thereof) up or down so that battery exchange system **830** can service batteries at any height with respect to a floor. For example, the elevation mechanism may comprise a movable platform (e.g., storage platform **825**) supporting the battery manipulating mechanism, the mechanical fastener actuator, or both.

According to a preferred embodiment, mobile robotic device **800** is configured to replace the batteries associated with the battery operated devices during a specified period of time to minimize interfering with customers or users of the battery operated devices. For example, mobile robotic device **800** may be configured to replace the batteries at night or outside of normal business hours. The time interval between battery replacements may be selected based on an average power consumption of the battery operated device and the charge capacity of the battery. In addition, mobile robotic device **800** may communicate with one or more central servers, which monitor a charge level of batteries associated with various battery operated devices and instruct mobile robotic device **800** to replace the batteries having a low charge. Further, mobile robotic device **800** may directly communicate with or monitor a signal transmitted from one or more of the battery operated devices to determine when a battery should be replaced.

When replacing a discharged battery, mobile robotic device **800** first travels to the battery operated device and locates the battery. For example, using receiver **810**, mobile robotic device **800** may search for a signal emitted from a transmitter associated with the battery operated device (e.g., a transmitter positioned proximate a mechanical fastener). By way of another example, mobile robotic device **800** may have stored in a memory battery location coordinates. After locating the battery on the battery operated device, mobile robotic device **800** decouples the battery (or a plurality of batteries) from the battery operated device. For example, mobile robotic device **800** may detachably couple to the battery the battery manipulation mechanism (e.g., the gripping mechanism) and use the mechanical fastener actuator to disengaging a mechanical fastener or latch coupling the battery to the battery operated device. After mobile robotic device **800** removes the battery (or a plurality of batteries) from the battery operated device, mobile robotic device **800** places the battery on storage platform **825** using the battery manipulation mechanism (e.g., the travel mechanism or arm) and decouples the battery from the battery manipulation mechanism. After placing the battery on storage platform **825**, mobile robotic device **800** may store an indication (e.g., coordinates) of where the discharged battery was placed on storage platform **825** so mobile robotic device can keep a record of which batteries on storage platform **825** are charged and discharged.

After removing the battery from the battery operated device, mobile robotic device **800** installs on the battery operated device a charged battery from storage platform **825**. For example, battery exchange system **830** may locate a charged battery on storage platform **825** (e.g., by accessing location coordinates of charged batteries from a memory) and move the battery manipulation mechanism to the charged battery. Mobile robotic device **800** can then detachably couple to the battery the battery manipulation mechanism (e.g., the gripping mechanism) and position the battery proximate the battery operated device. Once the battery is positioned proximate the battery operated device, mobile robotic device **800** couples the battery to the battery operated device (e.g., using the mechanical fastener actuator). For example, the mechanical fastener actuator may engage the mechanical fastener or latch to couple the battery to the battery operated device. After coupling the battery to the battery operated device, mobile robotic device **800** may start timer associated with the battery operated device or send a message to one or more central servers so that mobile robotic device **800** can schedule the next battery replacement.

After replacing the discharged battery on the battery operated device, mobile robotic device may travel to another battery operated device to replace one or more batteries thereon or may travel to one or more base stations so that the discharged batteries may be coupled to one or more base stations to be recharged. After traveling to a base station, mobile robotic device **800** determines whether the base station has installed therein a charged battery (e.g., by accessing local or remote data indicating whether the base station has a charged battery installed therein or by detecting a signal emitted from the base station indicative of whether the base station has any batteries installed therein). If the base station has a charged battery, mobile robotic device **800** locates the charged battery. For example, using receiver **810**, mobile robotic device **800** may search for a signal emitted by a transmitter associated with the battery operated device (e.g., a transmitter positioned proximate a mechanical fastener). By way of another example, mobile robotic device **800** may also have stored in a memory battery location coordinates. After locating the charged battery on the base station, mobile robotic device **800** decouples the charged battery (or a plurality of charged batteries) from the base station. For example, mobile robotic device **800** may detachably couple to the charged battery the battery manipulation mechanism (e.g., the gripping mechanism) and use the mechanical fastener actuator to disengaging a mechanical fastener or latch

coupling the battery to the base station. After mobile robotic device **800** removes the charged battery (or a plurality of charged batteries) from the base station, mobile robotic device **800** places the charged battery on storage platform **825** using the battery manipulation mechanism (e.g., the travel mechanism or arm) and decouples the battery from the battery manipulation mechanism. After placing the charged battery on storage platform **825**, mobile robotic device **800** may store an indication (e.g., coordinates) of where the charged battery was placed on storage platform **825** so mobile robotic device can keep a record of which batteries on storage platform **825** are charged and which batteries are discharged.

After removing the charged battery from the base station, mobile robotic device **800** installs on the base station one of the discharged batteries from storage platform **825**. For example, battery exchange system **830** may locate a discharged battery on storage platform **825** (e.g., by accessing location coordinates of discharged batteries from a memory) and move the battery manipulation mechanism to the discharged battery. Mobile robotic device **800** can then detachably couple to the battery the battery manipulation mechanism (e.g., the gripping mechanism) and position the battery proximate the base station. Once the discharged battery is positioned proximate the base station, mobile robotic device **800** couples the discharged battery to the base station (e.g., using the mechanical fastener actuator) so that the base station may charge the battery. For example, the mechanical fastener actuator may engage the mechanical fastener or latch to couple the battery to the base station. After coupling the discharged battery to the base station, mobile robotic device **800** may start a timer associated with the base station or send a message to one or more central servers so that mobile robotic device **800** can determine in the future whether a battery is charged and can be removed from the base station.

According to one embodiment, energy exchange system **835** is provided to transfer electrical energy from a power source to an energy storage device and then transfer the electrical energy from the energy storage device to a rechargeable battery of a battery operated device (e.g., via access port **324** of FIG. **3** or access port **424** of FIG. **4**). Energy exchange system **835** includes an energy storage device, such as one or more capacitors (e.g., a high energy density capacitors) or batteries, for storing electrical energy from a power source. The energy storage device preferably has a charge capacity sufficient to charge a discharged battery of a battery operated device.

Energy exchange system **835** includes an electrical connector configured to connect to a power source (e.g., an electrical receptacle) and charging circuitry that couples the connector to the energy storage device. The circuitry is preferably configured to convert the voltage available at the power source to a voltage suitable to charge the energy storage device. The charging circuitry may be configured to rapidly charge the energy storage device so that the mobile robotic device **800** can minimize the time spent charging the energy storage device. Mobile robotic device **800** may be designed to connect to a plurality of power sources. Thus, the electrical connector may be movable relative to the mobile robotic device **800**. For example, a travel mechanism or arm (along with one or more motors and motor control systems to effect a desired movement) may be provided for moving the electrical connector to a position suitable to connect to the power source.

Energy exchange system **835** includes a charge delivery mechanism electrically coupled to the energy storage device and configured to transfer electrical energy from the energy storage device to a rechargeable battery of a battery operated device. For example, the charge delivery mechanism may include an electrical connector configured to mate with an access port on the battery operated device (e.g., access port **324**, access port **424**, or both). Because the access ports may be located in different positions on battery operated devices and the battery operated devices may be positioned at different relative heights, the electrical connector may be movable relative to the mobile robotic device **800**. Thus, a travel mechanism or arm (along with one or more motors and motor control systems to effect a desired movement) may be provided for moving the electrical connector to a position suitable to connect to an access port of a battery operated device. Circuitry may also be provided to control power transfer to the battery operated device.

According to a preferred embodiment, mobile robotic device **800** is configured to deliver electrical energy to one or more battery operated devices during a specified period of time to minimize interfering with customers or users of the battery operated devices. For example, mobile robotic device **800** may be configured to deliver electrical energy at night or outside of normal business hours. The time interval between electrical energy deliveries may be selected based on an average power consumption of the battery operated device and the charge capacity of the battery of the battery operated device. In addition, mobile robotic device **800** may communicate with one or more central servers, which monitor a charge level of batteries associated with various battery operated devices and instruct mobile robotic device **800** to deliver electrical energy to the battery operated device having a battery with a low charge. Further, mobile robotic device **800** may directly communicate with or monitor a signal transmitted from one or more of the battery operated devices to determine when to deliver electrical energy.

Before delivering electrical energy to a battery operated device, mobile robotic device **800** must first charge the energy storage device by traveling to a power source. After traveling to a power source, mobile robotic device **800** determines how to position the electrical connector to interface with the power source. For example, mobile robotic device **800** may access local or remote data indicating a position of the power source relative to mobile robotic device **800** (or a portion thereof). By way of another example, mobile robotic device **800** may detect a signal emitted from the power source to help guide the electrical connector to the power source. After determining a relative position of the power source, mobile robotic device **800** couples the electrical connector to the power source so that the power source can charge the energy storage device. After the energy storage device is charged, mobile robotic device **800** travels to the battery operated device.

After travelling to the battery operated device, mobile robotic device **800** determines how to position the electrical connector to interface with an access port of the battery operated device (e.g., by accessing local or remote data indicating a position of the access port relative to mobile robotic device **800** (or a portion thereof) or by detecting a signal emitted from the battery operated device to help guide the electrical connector to the access port). After determining a relative position of the access port, mobile robotic device **800** couples the electrical connector to the access port and so that the electrical energy stored by the energy storage device can be transferred to the battery associated with the battery operated device. After the battery of the battery operated device is charged, mobile robotic device **800** may travel to another battery operated device to charge another battery or travel back to the power source to recharge the energy storage device.

According to one embodiment, data exchange system **840** is provided to transfer data between a battery operated device and mobile robotic device **800** and transfer data between mobile robotic device **800** and a base station. For example, data exchange system **840** may include a data interface, such as an electrical connector, configured to transfer data between a memory of the battery operated device (e.g., via connector **362** and input/output controller **360** of FIG. **3** or connector **464** and input/output controller **460** of FIG. **4**) and a memory of mobile robotic device **800** (e.g., memory **850** or **862**). The same data interface, or another data interface, may be provided to transfer data between a memory of the base station (e.g., via connector **762** and input/output controller **760**) and a memory of mobile robotic device **800** (e.g., memory **850** or **862**). Because the connectors may be located in different positions on the battery operated devices and base stations and the battery operated devices and base stations may be positioned at different heights, the data interface may be movable relative to the mobile robotic device **800**. Thus, a travel mechanism or arm (along with one or more motors and motor control systems to effect a desired movement) may be provided for moving the data interface to a position suitable to connect to a connector of a battery operated device or a base station.

According to another embodiment, data exchange system **840** is configured to decouple a removable memory from the battery operated device and the base station and place the removable memory on storage platform **825** (or couple the removable memory to interface **860**). Thus, data exchange system **840** preferably includes a removable memory manipulating mechanism configured to support and transport a removable memory between the battery operated device or base station and storage platform **825** (or memory interface **860**). For example, data exchange system **840** may detachably couple the removable memory manipulating mechanism to the removable memory and instruct the removable memory manipulating mechanism to move the removable memory from one location to another (e.g., between the battery operated device and the storage platform). Thus, the removable memory manipulating mechanism may comprise a mechanical or electromechanical gripping mechanism for grabbing and supporting the removable memory, a mechanical or electromechanical travel mechanism or arm for moving the gripping mechanism (and removable memory) between prescribed locations, and one or more motors and motor control systems to effect the desired motion. Data exchange system **840** may also include an elevation mechanism similar or identical to the elevation mechanism described with reference to battery exchange system **830** for adjusting a vertical position of any portion of data exchange system **840** or mobile robotic device **800**.

According to a preferred embodiment, mobile robotic device **800** is configured to transfer data before, during, or after mobile robotic device **800** is replacing a battery or transferring electrical energy. When transferring data between mobile robotic device **800** and a battery operated device, mobile robotic device **800** first travels to the battery operated device and locates the connector (e.g., connector **362** or **464**) or removable memory. For example, using receiver **810**, mobile robotic device **800** may search for a signal emitted from a transmitter associated with the battery operated device. By way of another example, mobile robotic device **800** may have stored in a memory connector or removable memory location coordinates. After locating the connector or removable memory on the battery operated device, mobile robotic device **800** couples the data interface to the connector (e.g., the travel mechanism or arm may position the data interface proximate to the connector and couple the data interface to the connector) or decouples the removable memory from the battery operated device (e.g., mobile robotic device **800** may detachably couple to the removable memory the removable memory manipulation mechanism (e.g., the gripping mechanism)). If mobile robotic device **800** couples the data interface to the connector, data exchange system **840** transfers data between the mobile robotic device and the battery operated device. If mobile robotic device **800** removes the removable memory from the battery operated device, mobile robotic device **800** places the removable memory on storage platform **825** using the battery manipulation mechanism (e.g., the travel mechanism or arm) and decouples the removable memory from the removable memory manipulation mechanism. After placing the removable memory on storage platform **825**, mobile robotic device **800** may store an indication (e.g., coordinates) of where the removable memory was placed on storage platform **825**. Mobile robotic device **800** may also install in the battery operated device a removable memory (e.g., have updated software or data stored thereon) from storage platform **825**.

After transferring data between the battery operated device and mobile robotic device **800**, mobile robotic device **800** may travel to another battery operated device to transfer data or may travel to one or more base stations. After traveling to a base station, mobile robotic device **800** locates the connector (e.g., connector **762**) or removable memory. For example, using receiver **810**, mobile robotic device **800** may search for a signal emitted from a transmitter associated with the base station. By way of another example, mobile robotic device **800** may have stored in a memory connector or removable memory location coordinates. After locating the connector or removable memory on the base station, mobile robotic device **800** couples to the connector the data interface (e.g., the travel mechanism or arm may position the data interface proximate to the connector and couple the data interface to the connector) or decouples from the base station the removable memory (e.g., mobile robotic device **800** may detachably couple to the removable memory the removable memory manipulation mechanism (e.g., the gripping mechanism)). If mobile robotic device **800** couples the data interface to the connector, data exchange system **840** transfers data between the mobile robotic device and the base station. If mobile robotic device **800** removes the removable memory from the base station, mobile robotic device **800** places the removable memory on storage platform **825** using the battery manipulation mechanism (e.g., the travel mechanism or arm) and decouples from the removable memory manipulation mechanism the removable memory. After placing the removable memory on storage platform **825**, mobile robotic device **800** may store an indication (e.g., coordinates) of where the removable memory was placed on storage platform **825**. Mobile robotic device **800** may also install in the base station a removable memory (e.g., having data from a battery operated device stored thereon) from storage platform **825**.

Paper exchange system **845** may be provided to deliver and install paper in a printer associated with one or more battery operated device. Paper exchange system **845** may also be configured to remove paper from the printer. Paper exchange system **845** preferably includes a paper manipulating mechanism configured to support and transport paper between the base station and storage platform **825** and between storage platform **825** and a printer associated with the battery operated device. For example, paper exchange system **845** may detachably couple the paper manipulating mechanism to the paper or ream of paper and instruct the paper manipulating mechanism to move the paper from one location to another

(e.g., between the storage platform and battery operated device). Thus, the paper manipulating mechanism may comprise a mechanical or electromechanical gripping mechanism for grabbing and supporting the paper, a mechanical or electromechanical travel mechanism or arm for moving the gripping mechanism (and paper) between prescribed locations, and one or more motors and motor control systems to effect the desired motion. Paper exchange system **845** may also include an elevation mechanism similar or identical to that described with reference to battery exchange system **830** for adjusting a vertical position of any portion of paper exchange system **845** or mobile robotic device **800**.

According to a preferred embodiment, mobile robotic device **800** is configured to install paper before, during, or after mobile robotic device **800** is replacing a battery or transferring electrical energy. When delivering paper to the printer, mobile robotic device **800** first travels to the battery operated device and locates a paper installation location (e.g., by searching for a signal emitted from the printer or by accessing the paper installation location coordinates from a memory). After locating the paper installation location, mobile robotic device **800** installs the paper. For example, paper exchange system **845** may locate paper or a ream of paper on storage platform **825** (e.g., by accessing location coordinates from a memory) and move the paper manipulation mechanism to the paper. Mobile robotic device **800** can then detachably couple to the paper (or ream of paper) the paper manipulation mechanism (e.g., the gripping mechanism) and install the paper.

After installing the paper, mobile robotic device may travel to another printer to install paper therein or may travel to one or more base stations to place additional paper on storage platform **825**. After traveling to a base station, mobile robotic device **800** locates a paper source (e.g., by searching for a signal emitted from the base station or by accessing the paper source location coordinates from a memory). After locating the paper source, mobile robotic device **800** transfers paper from the base station to storage platform **825**. For example, paper exchange system **845** may move the paper manipulation mechanism to the paper and mobile robotic device **800** may detachably couple to the paper (or ream of paper) the paper manipulation mechanism (e.g., the gripping mechanism) and transfer the paper storage platform **825**. Mobile robotic device **800** may store in a memory a location of paper on storage platform so mobile robotic device **800** can locate the paper after traveling to the battery operated device.

Mobile robotic device **800** further includes memory **850**, which may be implemented using one or more standard memory devices. The memory devices may include, for instance, RAM **851**, ROM **852**, or EEPROM devices, and may also include magnetic or optical storage devices, such as hard disk drives, CD-ROM drives, and DVD-ROM drives. Mobile robotic device **800** also includes memory interface **860** coupled to an internal hard disk drive **862**. Interface **860** may also be coupled to an internal drive, such as an optical disk drive, or an external drive, such as a drive coupled to mobile robotic device **800** over a USB, IEEE 1194, or PCMCIA connection. Interface **860** may also be coupled to a removable memory **864**, such as flash memory. Thus, mobile robotic device **800** may couple a removable memory from a base station or battery operated device to interface **860** to transfer data between the removable memory and memories **850** or **862**.

In one embodiment, any number of program modules are stored in the drives (e.g., drive **862**) or ROM **852** including an operating system (OS) **853**, one or more program modules or components **854**, and data **855**. All or portions of the program modules may also be cached in RAM **851**. Any suitable operating system **853** may be employed. Program modules **854** may comprise a set of instructions to implement the functions of mobile robotic device **800** described herein.

An input/output controller **865** may be provided to interface to one or more user input devices, such as one or more buttons or other controls. Mobile robotic device **800** may include other input devices coupled to input/output controller **865**. Accordingly, input/output controller **865** may include hardware, software, firmware, or any combination thereof, to implement one or more protocols, such as stacked protocols along with corresponding layers. Thus, input/output controller **865** may function as a RS232 port, a USB port, an ethernet port, a parallel port, an IEEE 1394 serial port, and an IR interface. Input/output controller **865** may also support various wired, wireless, optical, and other communication standards. While the input devices may be integrated into mobile robotic device **800** and coupled to processor **815** via input/output controller **865**, the input devices may also connect via other interfaces, such as connector **846**. Thus, mobile robotic device **800** may transfer data to and from a base station or battery operated device via connector **846** and input/output controller **865**.

A network interface **870** may be provided to communicate with an external network. For example, mobile robotic device **800** may communicate with one or more base stations, one or more battery operated device, and one or more central servers to exchange data and receive instructions (e.g., which batteries should be replaced). Network interface **870** may facilitate wired or wireless communication with other devices over a short distance (e.g., Bluetooth™) or nearly unlimited distances (e.g., the Internet). In the case of a wired connection, a data bus may be provided using any protocol, such as IEEE 802.3 (Ethernet), advanced technology attachment (ATA), personal computer memory card international association (PCMCIA), or USB, for example. A wireless connection may use low or high powered electromagnetic waves to transmit data using any wireless protocol, such as Bluetooth™, IEEE 802.11b (or other WiFi standards), infrared data association (IrDa), or radio frequency identification (RFID), for example. Network interface **870** may be omitted in certain embodiments.

According to one embodiment, a camera system **875** is provided to capture one or more images as mobile robotic device **800** travels between a battery operated device and a base station. Camera system **875** may comprise an illumination source, a lens assembly, and an imager. The illumination source may comprise any source of light, such as light emitting diodes (LEDs), flash strobes, or incandescent or fluorescent lamps. The lens assembly may comprise any number of lenses for focusing light on the imager. The lens assembly may also comprise a zoom lens coupled to processor **815** to control an amount of optical zoom. The imager forms an electronic image of one or more objects. The imager may comprise a wide range of image sensing devices for converting an optical image (or another wave in the electromagnetic spectrum) into an electrical signal. For example, the imager may be a digital camera, such as a charge-coupled device (CCD) camera or complimentary metal-oxide semiconductor (CMOS) camera, both of which form an array of pixels, which together constitute an electronic representation of the image. Each pixel location stores data indicative of the light intensity at that location of the image. The light intensity data for each pixel may be a color-coded vector (e.g., red-green-blue) or monochrome intensity (e.g., grayscale). The captured images may be stored in memory **850**, memory **862**, or removable memory **864** and used for any number of purposes,

such as performing a photographic and spatial survey of isles, retail shelves, and the surrounding environment. The captured images may also be used to generate three-dimensional store models for easy navigation and remote viewing. According to one embodiment, one or more of the battery exchange system **830**, energy exchange system **835**, data exchange system **840**, and paper exchange system **845** are omitted from mobile robotic device **800**. In other words, mobile robotic device **800** may be configured to perform a photographic and spatial survey of isles, retail shelves, and the surrounding environment without exchanging a discharged battery coupled to a battery operated device with a charged battery, for example.

Power supply system **880** supplies mobile robotic device with electrical energy sufficient to perform prescribed operations. Power supply system **880** comprises a rechargeable battery that can be recharged by a mobile robotic device docking station, one or more of the base stations, one or more of the power sources, or at other prescribed points of the operating environment (e.g., remote computer(s) may access the captured images via a network, such as the Internet).

According to one embodiment, a display driver **885** interfaces with processor **815** and a display to present, for example, in textual form, graphical form, or both, data or other information stored in one or more of memories **850** and **862**. For example, mobile robotic device **800** may present data, menus, prompts, and otherwise communicate with the user via one or more display devices, which may comprise any suitable display device, such as an integrated cathode ray tube (CRT), liquid crystal display (LCD), or other display device.

As used herein, a component or module may comprise hardware, software, firmware, or any combination thereof (e.g., self-contained hardware or software components that interact with a larger system). Embodiments may include various steps, which may be embodied in machine-executable instructions to be executed by processing unit **815** or another processor. Thus, embodiments may be provided as a computer program product including a machine-readable storage medium having stored thereon instructions (in compressed or uncompressed form) that may be used to program a computer (or other electronic device) to perform processes or methods described herein. In addition, the steps may be performed by hardware components that include specific logic for performing the steps or by a combination of hardware, software, and firmware. A result or output from any step, such as a confirmation that the step has or has not been completed or an output value from the step, may be stored (in a memory), displayed (on a display), printed (on a printing device), or transmitted over a wired or wireless network (via a network interface).

Embodiments may also be provided as a computer program product embodied on a machine-readable storage medium having stored thereon instructions (in compressed or uncompressed form) that may be used to program a computer (or other electronic device) to perform processes or methods described herein. The machine-readable storage medium may include, but is not limited to, hard drives, floppy diskettes, optical disks, CD-ROMs, DVDs, read-only memories (ROMs), random access memories (RAMs), EPROMs, EEPROMs, flash memory, magnetic or optical cards, solid-state memory devices, or other types of media/machine-readable medium suitable for storing electronic instructions. Further, embodiments may also be provided as a computer program product embodied on a machine-readable signal (in compressed or uncompressed form). Examples of machine-readable signals, whether modulated using a carrier or not, include, but are not limited to, signals that a computer system or machine hosting or running a computer program can be configured to access, including signals downloaded through the Internet or other networks. For example, distribution of software may be via CD-ROM or via Internet download.

The terms and descriptions used herein are set forth by way of illustration only and are not meant as limitations. Those skilled in the art will recognize that many variations can be made to the details of the above-described embodiments without departing from the underlying principles of the invention. The scope of the invention should therefore be determined only by the following claims (and their equivalents) in which all terms are to be understood in their broadest reasonable sense unless otherwise indicated.

The invention claimed is:

**1**. An automated battery exchange system for exchanging a discharged battery coupled to a battery operated device with a charged battery, comprising:

a battery operated device positioned within an operating environment characterized by areas accessible to retail customers, the battery operated device comprising a display for presenting data to one or more retail customers in the operating environment and a rechargeable battery for powering the battery operated device;

a base station remotely located from the battery operated device, the base station electrically coupled to a power source and configured to charge a discharged rechargeable battery to provide a charged rechargeable battery; and

an autonomous mobile robotic device comprising:

a transportation system for moving the autonomous mobile robotic device between the battery operated device and the base station,

a storage platform for supporting a set of rechargeable batteries that includes at least one charged battery, and

a battery exchange system configured to:

autonomously decouple from the battery operated device the discharged rechargeable battery and include it as a discharged member of the set of rechargeable batteries supported on the storage platform,

autonomously couple to the battery operated device the at least one charged battery from the set of rechargeable batteries supported on the storage platform,

autonomously decouple from the base station the charged rechargeable battery, and

autonomously couple to the base station the discharged member of the set of rechargeable batteries supported on the storage platform,

wherein the autonomous mobile robotic device is configured to travel between the battery operated device and the base station so that the battery exchange system can autonomously exchange the discharged rechargeable battery from the battery operated device with the at least one charged battery from the set of rechargeable batteries supported on the storage platform after the autonomous mobile robotic device travels to the battery operated device and autonomously exchange the charged rechargeable battery from the base station with the discharged member of the set of rechargeable batteries supported on the storage platform after the autonomous mobile robotic device travels to the base station.

**2**. The system of claim **1**, wherein the battery operated device further comprises an input device for accepting data from a user.

3. The system of claim 1, wherein the battery operated device comprises a photo kiosk system.

4. The system of claim 1, wherein the autonomous mobile robotic device is configured to travel between the battery operated device and the base station only during a specified period of time to thereby reduce interference with the retail customers while they are moving to locations within the area of the operating environment.

5. The system of claim 1, wherein the battery operated device is positioned within the operating environment in a location having no electrical receptacle located near the battery operated device for powering the battery operated device, and the base station is positioned in a location having a readily accessible electrical receptacle for powering the base station so that the base station can charge the discharged rechargeable battery.

6. The system of claim 1, wherein the base station is configured to charge a plurality of rechargeable batteries.

7. The system of claim 1, wherein the base station includes a transmitter for guiding the autonomous mobile robotic device toward the base station.

8. The system of claim 1, wherein the battery operated device includes a memory for storing data, the base station includes a network interface for communicatively coupling to the base station a remote data store, the autonomous mobile robotic device includes a memory for storing data, and the autonomous mobile robotic device includes a data exchange system configured to transfer between the memory of the battery operated device and the memory of the autonomous mobile robotic device data and transfer between the memory of the autonomous mobile robotic device and the remote data store data so that data is available to be relayed between the remote data store and the memory of the battery operated device as the autonomous mobile robotic device travels between the base station and the battery operated device.

9. The system of claim 1, wherein the battery operated device includes a removable memory, the base station includes a removable memory, the base station includes a network interface configured to transfer between a remote data store and the removable memory of the base station data, the storage platform is configured to support a set of removable memories, and the autonomous mobile robotic device includes a data exchange system configured to decouple from the battery operated device the removable memory, couple to the battery operated device a removable memory from the set of removable memories supported on the storage platform, decouple from the base station a removable memory, and couple to the base station a removable memory from the set of removable memories supported on the storage platform so that data is available to be relayed between the remote data store and the battery operated device as the autonomous mobile robotic device travels between the base station and the battery operated device and exchanges at the base station and the battery operated device the removable memories.

10. The system of claim 1, wherein the battery operated device includes a mechanical fastener for coupling the at least one charged battery to the battery operated device and the battery exchange system is configured to disengage the mechanical fastener so that the discharged rechargeable battery is available to be decoupled from the battery operated device and engage the mechanical fastener so that the at least one charged battery is available to be coupled to the battery operated device.

11. The system of claim 10, wherein the battery operated device includes a transmitter proximate the mechanical fastener, the transmitter configured to guide the autonomous mobile robotic device toward the battery operated device and the mechanical fastener.

12. The system of claim 1, wherein the autonomous mobile robotic device further comprises:

a camera system configured to capture a plurality of images as the autonomous mobile robotic device travels between the battery operated device and the base station; and

a memory for storing the plurality of captured images.

13. The system of claim 1, wherein the battery operated device includes a printing device and paper for the printing device, the base station includes a paper source, the storage platform is configured to support paper, and the autonomous mobile robotic device includes a paper delivery system configured to transfer paper from the paper source to the storage platform and transfer paper from the storage platform to the battery operated device.

14. An automated energy delivery system for operation within an operating environment characterized by areas accessible to retail customers, so as to deliver electrical energy to one or more battery operated devices, comprising:

a battery operated device positioned within the operating environment, the battery operated device comprising a display for presenting data to one or more users in the operating environment and a rechargeable battery for powering the battery operated device; and

an autonomous mobile robotic device comprising:

a transportation system for moving the autonomous mobile robotic device between the battery operated device and a power source,

an energy storage device configured to store electrical energy from the power source, and

an energy exchange system for autonomously transferring electrical energy from the power source to the energy storage device, and for autonomously transferring electrical energy from the energy storage device to the rechargeable battery,

wherein the autonomous mobile robotic device is configured to travel between the battery operated device and the power source so that the energy exchange system can transfer electrical energy from the power source to the energy storage device after the autonomous mobile robotic device travels to the power source and the energy exchange system can transfer electrical energy from the energy storage device to the rechargeable battery for charging the rechargeable battery after the autonomous mobile robotic device travels to the battery operated device.

* * * * *