US008863030B2

(12) **United States Patent**
White

(10) **Patent No.: US 8,863,030 B2**
(45) **Date of Patent: *Oct. 14, 2014**

(54) **MENU PROMOTIONS USER INTERFACE**

(75) Inventor: **Scott White**, Austin, TX (US)

(73) Assignee: **AT&T Intellectual Property I, L.P.**, Atlanta, GA (US)

(*) Notice: Subject to any disclaimer, the term of this patent is extended or adjusted under 35 U.S.C. 154(b) by 107 days.

This patent is subject to a terminal disclaimer.

(21) Appl. No.: **13/602,830**

(22) Filed: **Sep. 4, 2012**

(65) **Prior Publication Data**

US 2012/0331419 A1 Dec. 27, 2012

Related U.S. Application Data

(63) Continuation of application No. 12/638,026, filed on Dec. 15, 2009, now Pat. No. 8,281,254, which is a continuation of application No. 11/204,287, filed on Aug. 15, 2005, now Pat. No. 7,657,843.

(51) **Int. Cl.**
G06F 3/048 (2013.01)
G06Q 30/02 (2012.01)

(52) **U.S. Cl.**
CPC ***G06Q 30/02*** (2013.01)
USPC **715/810**; 715/817; 715/818; 715/819; 715/820; 725/2; 725/8; 725/39; 725/40; 725/41; 725/42

(58) **Field of Classification Search**
USPC 715/810, 813, 817–822, 827, 829, 830, 715/831, 847; 725/2, 4, 8, 39–61
See application file for complete search history.

(56) **References Cited**

U.S. PATENT DOCUMENTS

5,479,268	A	12/1995	Young et al.
5,805,235	A	9/1998	Bedard
6,038,545	A	3/2000	Mandeberg et al.
6,757,906	B1	6/2004	Look et al.
7,552,458	B1	6/2009	Finseth et al.
7,657,843	B2	2/2010	White
7,757,252	B1	7/2010	Agasse
2002/0163543	A1	11/2002	Oshikiri
2005/0235319	A1	10/2005	Carpenter et al.
2005/0246738	A1	11/2005	Lockett et al.
2006/0069623	A1	3/2006	MacDonald Korth et al.
2006/0206913	A1	9/2006	Jerding et al.
2010/0095243	A1	4/2010	White

OTHER PUBLICATIONS

Non-Final Office Action for U.S. Appl. No. 12/638,026 mailed Dec. 21, 2011, 15 pages.
Notice of Allowance for U.S. Appl. No. 12/638,026 mailed Jun. 4, 2012, 10 pages.

Primary Examiner — Weilun Lo
Assistant Examiner — Rashedul Hassan
(74) *Attorney, Agent, or Firm* — Toler Law Group, PC

(57) **ABSTRACT**

A system includes a processor and a memory coupled to the processor. The memory includes instructions that, when executed by the processor, cause the processor to perform a method that includes displaying a plurality of menu items (each associated with one of a plurality of media content items) in a graphical user interface. The method also includes, when a particular promotion associated with a particular media content item is to be displayed, displaying the particular promotion proximate to a particular menu item of the plurality of menu items and enabling a direction command. Selection of the direction command causes a cursor position to jump directly to the particular menu item from a different menu item of the plurality of menu items.

20 Claims, 6 Drawing Sheets

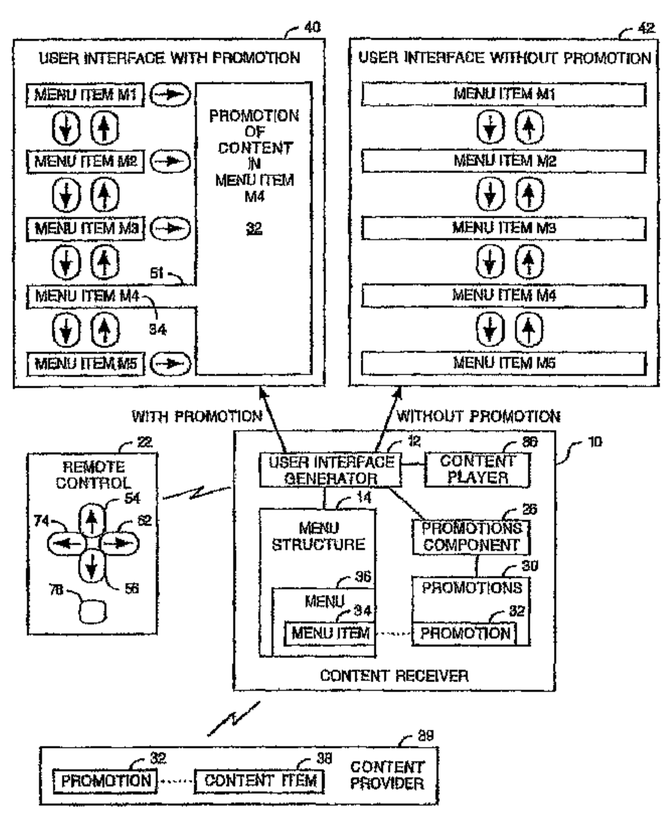

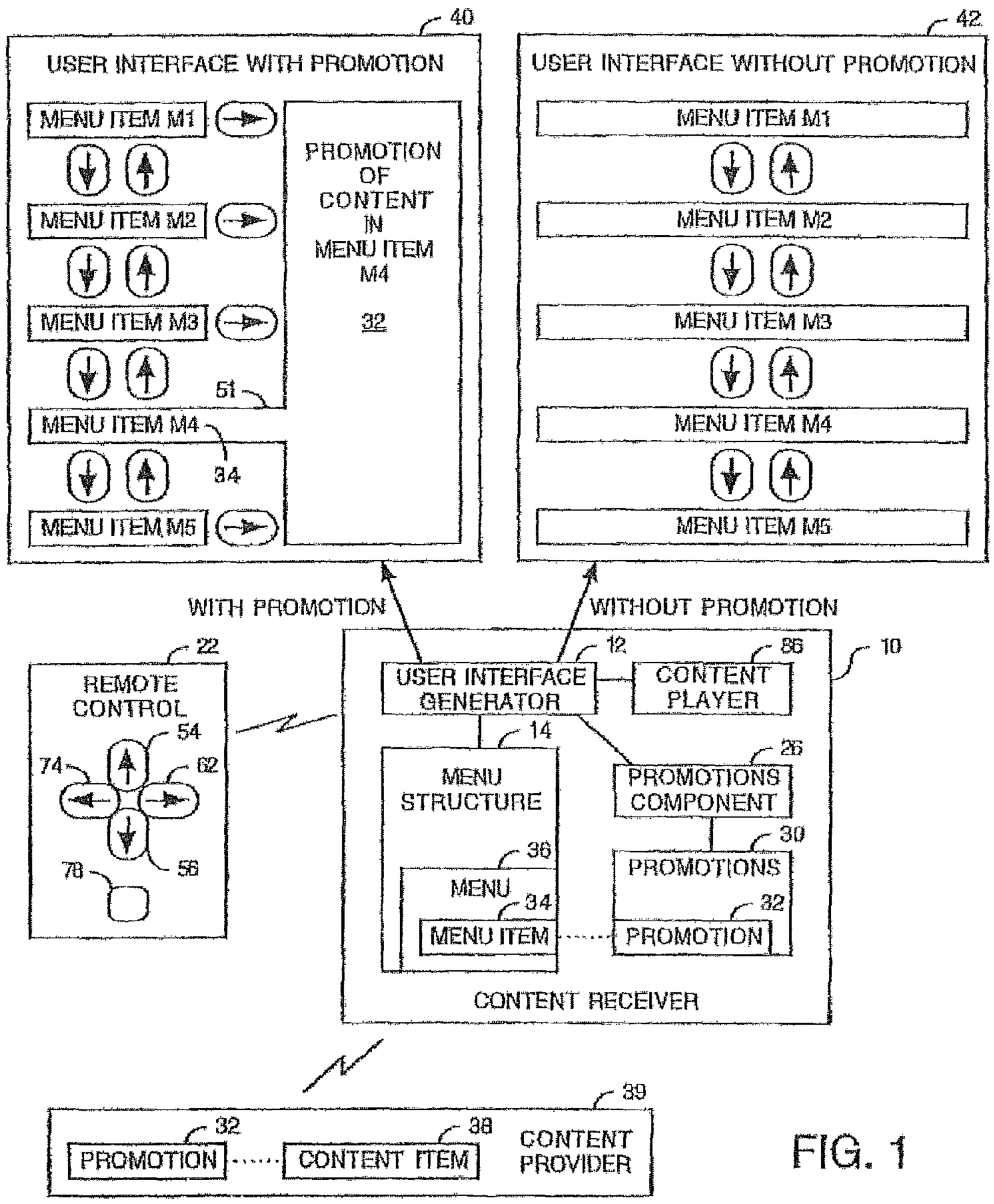
40
USER INTERFACE WITH PROMOTION
MENU ITEM M1
MENU ITEM M2
MENU ITEM M3
MENU ITEM M4
MENU ITEM M5
PROMOTION OF CONTENT IN MENU ITEM M4
32
51
34
42
USER INTERFACE WITHOUT PROMOTION
MENU ITEM M1
MENU ITEM M2
MENU ITEM M3
MENU ITEM M4
MENU ITEM M5
WITH PROMOTION
WITHOUT PROMOTION
22
REMOTE CONTROL
54
74
62
78
56
12
USER INTERFACE GENERATOR
86
CONTENT PLAYER
10
14
MENU STRUCTURE
36
MENU
34
MENU ITEM
26
PROMOTIONS COMPONENT
30
PROMOTIONS
32
PROMOTION
CONTENT RECEIVER
39
32
PROMOTION
38
CONTENT ITEM
CONTENT PROVIDER

FIG. 1

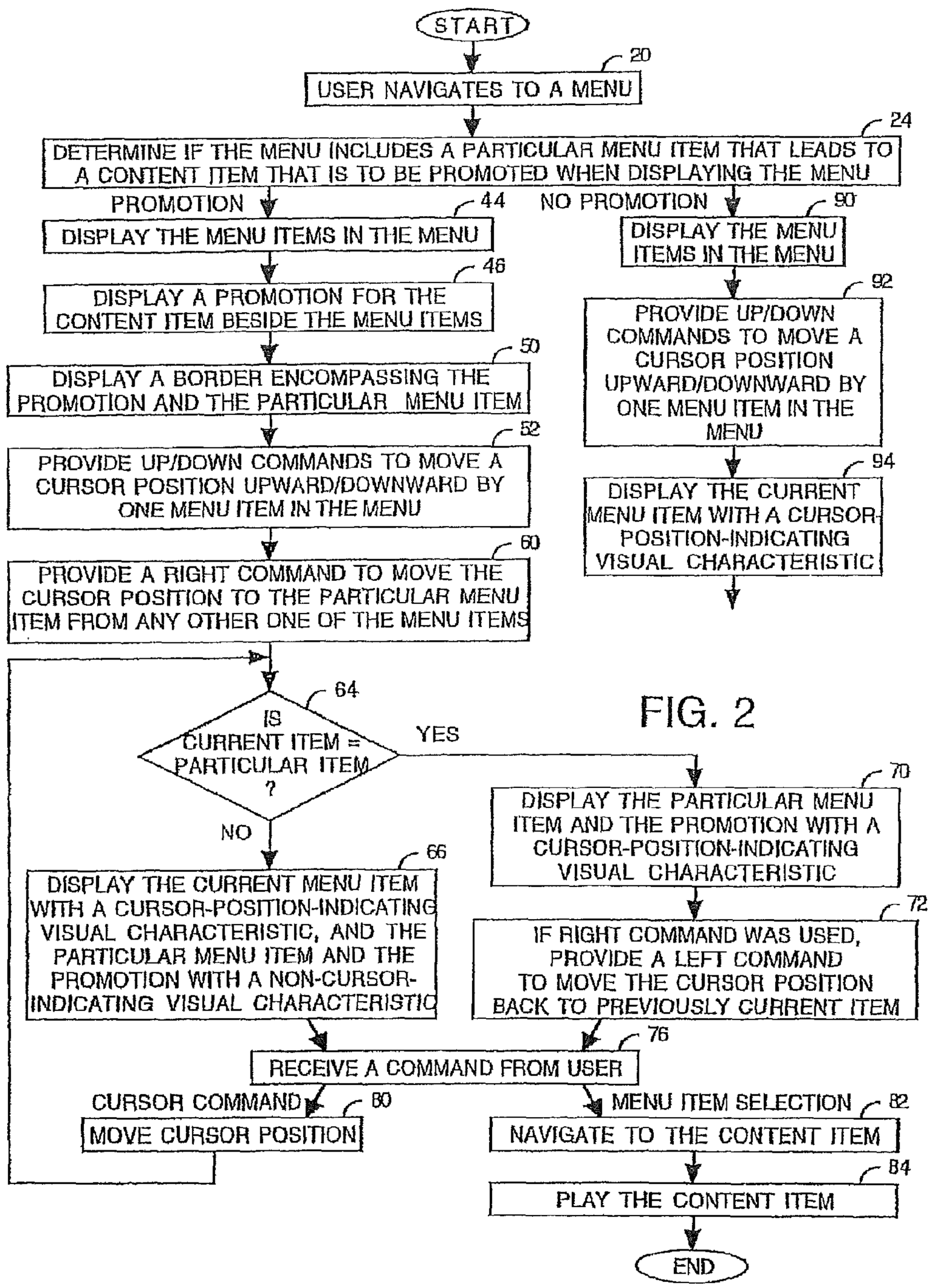
START
20
USER NAVIGATES TO A MENU
24
DETERMINE IF THE MENU INCLUDES A PARTICULAR MENU ITEM THAT LEADS TO A CONTENT ITEM THAT IS TO BE PROMOTED WHEN DISPLAYING THE MENU
PROMOTION
NO PROMOTION
44
DISPLAY THE MENU ITEMS IN THE MENU
46
DISPLAY A PROMOTION FOR THE CONTENT ITEM BESIDE THE MENU ITEMS
50
DISPLAY A BORDER ENCOMPASSING THE PROMOTION AND THE PARTICULAR MENU ITEM
52
PROVIDE UP/DOWN COMMANDS TO MOVE A CURSOR POSITION UPWARD/DOWNWARD BY ONE MENU ITEM IN THE MENU
60
PROVIDE A RIGHT COMMAND TO MOVE THE CURSOR POSITION TO THE PARTICULAR MENU ITEM FROM ANY OTHER ONE OF THE MENU ITEMS
90
DISPLAY THE MENU ITEMS IN THE MENU
92
PROVIDE UP/DOWN COMMANDS TO MOVE A CURSOR POSITION UPWARD/DOWNWARD BY ONE MENU ITEM IN THE MENU
94
DISPLAY THE CURRENT MENU ITEM WITH A CURSOR-POSITION-INDICATING VISUAL CHARACTERISTIC
64
IS CURRENT ITEM = PARTICULAR ITEM ?
YES
NO
70
DISPLAY THE PARTICULAR MENU ITEM AND THE PROMOTION WITH A CURSOR-POSITION-INDICATING VISUAL CHARACTERISTIC
66
DISPLAY THE CURRENT MENU ITEM WITH A CURSOR-POSITION-INDICATING VISUAL CHARACTERISTIC, AND THE PARTICULAR MENU ITEM AND THE PROMOTION WITH A NON-CURSOR-INDICATING VISUAL CHARACTERISTIC
72
IF RIGHT COMMAND WAS USED, PROVIDE A LEFT COMMAND TO MOVE THE CURSOR POSITION BACK TO PREVIOUSLY CURRENT ITEM
76
RECEIVE A COMMAND FROM USER
CURSOR COMMAND
80
MOVE CURSOR POSITION
MENU ITEM SELECTION
82
NAVIGATE TO THE CONTENT ITEM
84
PLAY THE CONTENT ITEM
END

FIG. 2

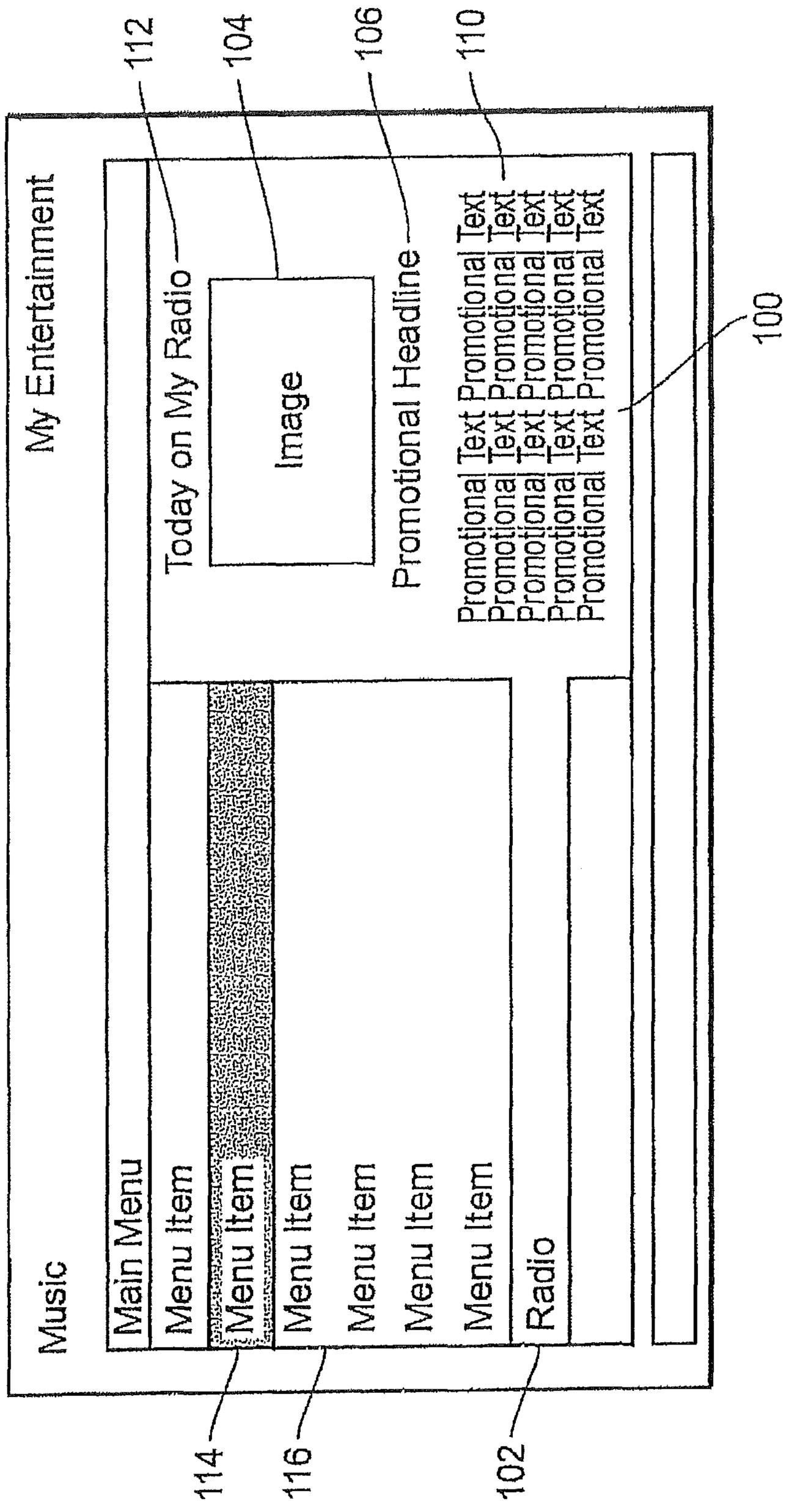
My Entertainment
Music
Main Menu
Menu Item
Menu Item
Menu Item
Menu Item
Menu Item
Radio
Today on My Radio
Image
Promotional Headline
Promotional Text
Promotional Text
Promotional Text
Promotional Text
Promotional Text
112
104
106
110
100
114
116
102

FIG. 3

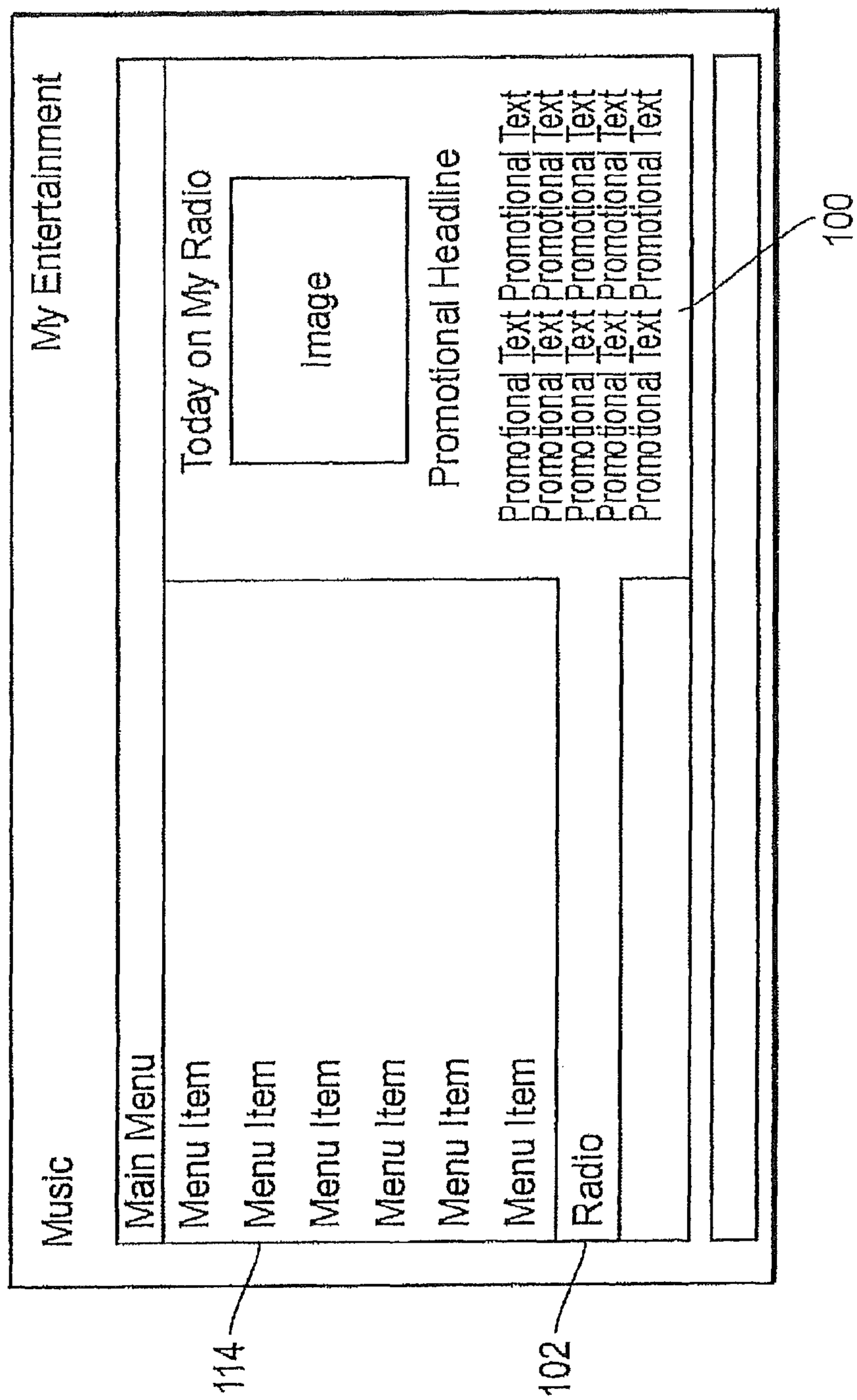
Music
My Entertainment
Today on My Radio
Image
Promotional Headline
Promotional Text Promotional Text Promotional Text Promotional Text Promotional Text
Main Menu
Menu Item
Menu Item
Menu Item
Menu Item
Menu Item
Menu Item
Radio
114
102
100

FIG. 4

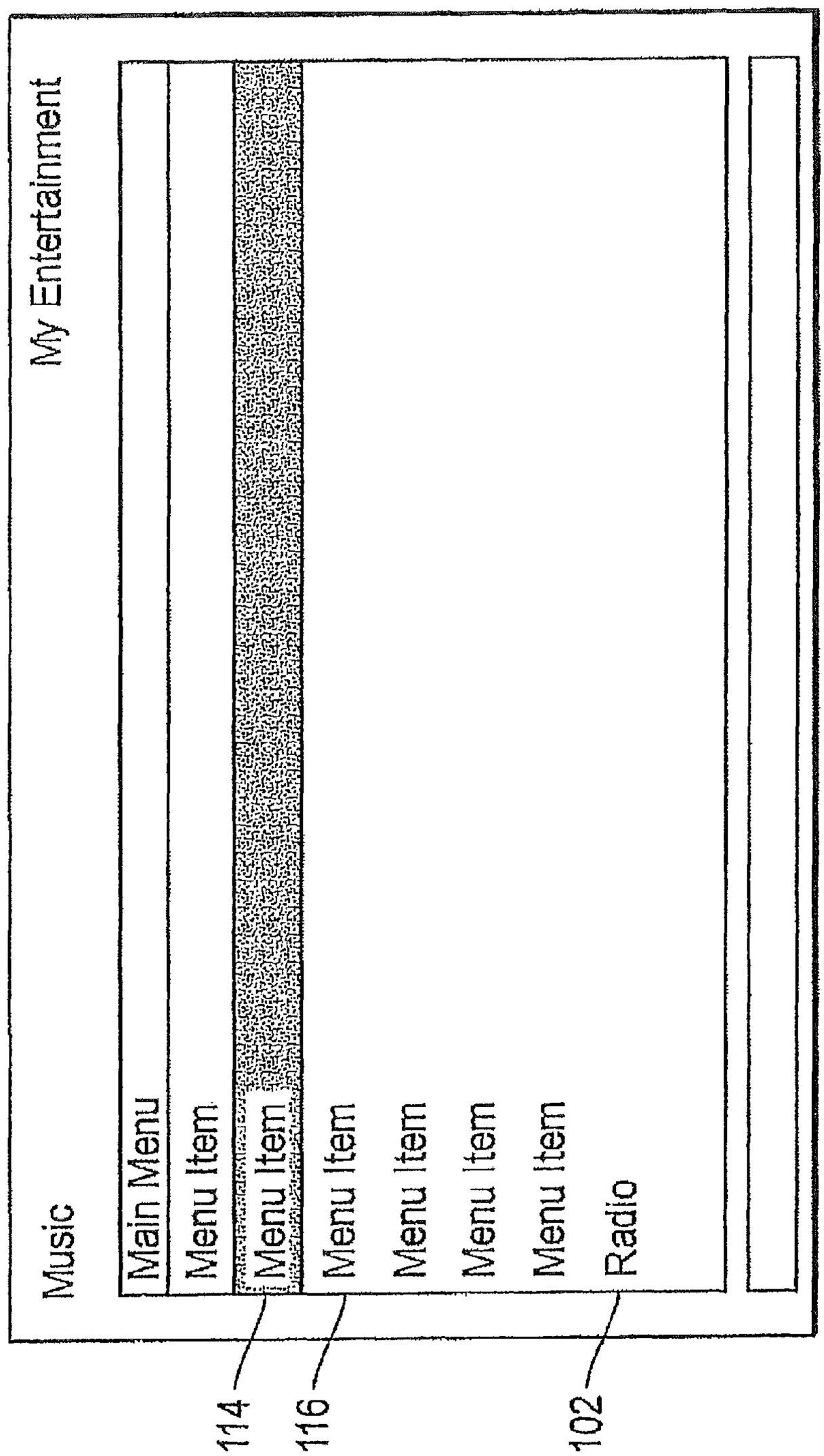
Music
My Entertainment
Main Menu
Menu Item
Menu Item
Menu Item
Menu Item
Menu Item
Menu Item
Radio
114
116
102

FIG. 5

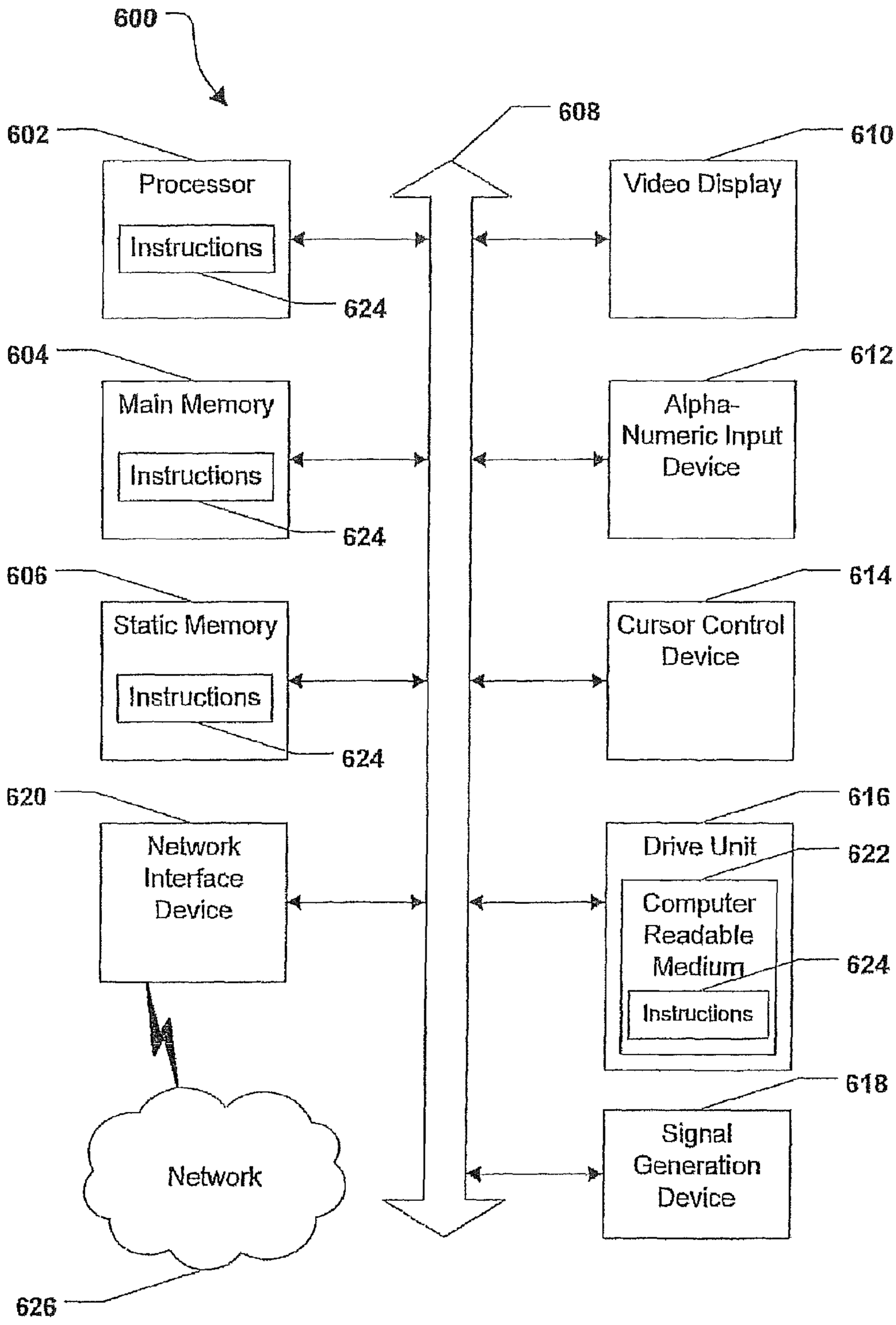
600
602
Processor
Instructions
624
608
610
Video Display
604
Main Memory
Instructions
624
612
Alpha-Numeric Input Device
606
Static Memory
Instructions
624
614
Cursor Control Device
620
Network Interface Device
616
Drive Unit
622
Computer Readable Medium
624
Instructions
618
Signal Generation Device
Network
626

FIG. 6

MENU PROMOTIONS USER INTERFACE

CROSS-REFERENCE TO RELATED APPLICATION

This application is a continuation of and claims priority from U.S. patent application Ser. No. 12/638,026, filed Dec. 15, 2009, and entitled "MENU PROMOTIONS USER INTERFACE," now issued as U.S. Pat. No. 8,281,254, which is incorporated herein by reference in its entirety and which is a continuation of and claims priority from U.S. patent application Ser. No. 11/204,287, filed Aug. 15, 2005, and entitled "MENU PROMOTIONS USER INTERFACE," now issued as U.S. Pat. No. 7,657,843, which is incorporated herein by reference in its entirety.

FIELD OF THE DISCLOSURE

The present disclosure relates to user interfaces having a menu.

BACKGROUND

Video set-top boxes provide menus to enable users to navigate to content items of interest. Examples of the menus are shown in U.S. Patent Application Publication No. US 2003/0112467 A1. The aforementioned reference discloses a graphical user interface having a right menu region adjacent to a left menu region. The left menu region comprises selectable menu elements. The right menu region displays sub-elements associated with one of the selectable menu elements identified by a selection element.

BRIEF DESCRIPTION OF THE DRAWINGS

The present disclosure is pointed out with particularity in the appended claims.

FIG. **1** is a block diagram of an embodiment of a system to promote a content item at a deeper level in a menu;

FIG. **2** is a flow chart of an embodiment of a method of promoting the content item with the menu;

FIG. **3** is an illustration of an embodiment of a user interface that displays, beside multiple menu items, a promotion for a content item;

FIG. **4** is an illustration of an embodiment of the user interface of FIG. **3** when the cursor position is moved to the promotion;

FIG. **5** is an illustration of an embodiment of a user interface when the content item is not promoted; and

FIG. **6** includes an illustration of a general computer system.

DETAILED DESCRIPTION

Disclosed herein are embodiments of menu-displaying user interfaces. If a menu includes a particular menu item that leads to a content item that is to be promoted, the user interface displays a promotion for the content item beside items in the menu. Up/down commands are provided to move a cursor position upward/downward by one menu item in the menu. Further, a right command is provided to move the cursor position to the particular menu item from any other one of the menu items. When the cursor position is at the particular menu item, the particular menu item and the promotion are both displayed with a cursor-position-indicating visual characteristic.

In a particular embodiment, a computer implemented method is disclosed. The method includes determining, at a set-top box device, that a plurality of menu items in a menu includes a particular menu item associated with a content item that is to be promoted when displaying the plurality of menu items in the menu. The method further includes displaying the plurality of menu items in the menu. A determination is made at the set top box whether to display a promotion of the content item. In response to determining to display the promotion, the promotion of the content item is displayed beside the plurality of menu items, and a right command is enabled allowing a cursor position to jump directly to the particular menu item from a different menu item of the plurality of menu items. The jump is performed after a single application of the right command. The different menu item does not have a restriction as to a position in the menu. In response to determining not to display the promotion, the right command is disabled.

In another embodiment, a set top box device is disclosed. The set top box device includes a processor and a computer readable medium coupled to the processor. The computer readable medium is configured to store a promotion component to determine that a plurality of menu items in a menu includes a particular menu item associated with a content item that is to be promoted when displaying the menu. The computer readable medium is further configured to store a user interface generator that is responsive to the promotion component. The user interface generator is to display the plurality of menu items in the menu and to determine whether to display a promotion of the content item. In response to determining to display the promotion, the user interface generator displays the promotion of the content item beside the plurality of menu items, and enables a right command allowing a cursor position to jump directly to the particular menu item from a different menu item of the plurality of menu items. The jump is performed after a single application of the right command. The different menu item does not have a restriction as to a position in the menu. In response to determining not to display the promotion, the right command is disabled.

In another embodiment, a computer readable storage medium is disclosed. The computer readable storage medium tangibly embodies a program of operational instructions, where the operational instructions are executable by a processor to determine that a plurality of menu items in a menu includes a particular menu item associated with a content item that is to be promoted when displaying the plurality of menu items in the menu. The operational instructions are executable by the processor to display the plurality of menu items in the menu and to determine whether to display a promotion of the content item. In response to determining to display the promotion, the operational instructions are executable by the processor to display the promotion of the content item beside the plurality of menu items and to enable a right command allowing a cursor position to jump directly to the particular menu item from a different menu item of the plurality of menu items, where the jump is performed after a single application of the right command, and where the different menu item does not have a restriction as to a position in the menu. In response to determining not to display the promotion, the operational instructions are executable by the processor to disable the right command.

Embodiments are described with reference to FIG. **1**, which is a block diagram of an embodiment of a system, and FIG. **2**, which is a flow chart of an embodiment of a method of promoting a content item accessible via a menu.

The system comprises a content receiver **10** that includes a user interface generator **12**. The content receiver **10** receives content, such as video content and/or audio content, and plays the content to its users. The content may be audibly and/or visibly displayed by an audio output device and/or a visual display device. The audio output device and/or the visual display device may be either integrated with or external to the content receiver **10**. Examples of the content receiver **10** with the user interface generator **12** include, but are not limited to, video set-top box receivers, digital video recorders, television receivers, personal computers, personal digital assistants, gaming devices (e.g. Sony's PLAYSTATION or Microsoft's X-BOX), and wireless telephones.

Selections of which content to receive and/or play are made using user interfaces generated by the user interface generator **12**. The user interfaces enable users to navigate a menu structure **14** of multiple menus. Some or all of the multiple menus may be hierarchical in that a user selection of an item from one menu leads to another menu.

FIG. **2** illustrates acts performed for a current menu to be displayed in a user interface generated by the user interface generator **12**. Optionally, as indicated by block **20**, the current menu is one to which a user has navigated in the menu structure **14**. The menu structure **14** can be navigated in response to user inputs received by a remote control **22** or another user input device.

As indicated by block **24**, the method comprises determining if the current menu includes a particular menu item that leads to a content item that is to be promoted when displaying the current menu. This act can be performed by a promotions component **26** of the content receiver **10**. The promotions component **26** receives promotions **30** for content items that can be received and/or played by the content receiver **10**.

Some or all of the promotions **30** are targeted to one or more particular menu items in one or more particular menus. Each promotion, with data identifying its targeted menu item (s) and/or data indicating an expiration date and time for the promotion, can be transmitted to the content receiver **10** by one or more content providers who provide the content items and/or by a network operator or another source.

For example, consider the promotions **30** including a promotion **32** targeted for display with a particular menu item **34** in a particular menu **36**. The promotion **32** is for a content item **38** that is available from a content provider **39**. Examples of the content item **38** include, but are not limited to, a video-on-demand item, a near-video-on-demand item, a broadcast video item, and an audio item. The content item **38** can be played after navigating one or more levels deeper into the menu structure **14** from the particular menu item **34**.

If the promotions component **26** determines that the current menu includes the particular menu item **34**, the user interface generator **12** generates a user interface **40** that displays the promotion **32**. If the promotions component **26** determines that the current menu does not include the particular menu item **34**, the user interface generator **12** generates a user interface **42** that is absent the promotion **32**. Moreover, if the promotions component **26** determines that the current menu has no targeted menu items, the user interface **42** may be absent any targeted promotions.

If a content item is to be promoted when displaying the current menu, acts of displaying the menu items in the current menu and displaying a promotion for the content item beside the menu items are performed as indicated by blocks **44** and **46**. The menu items may be displayed in a single column. The promotion may be adjacent to each of the menu items.

Preferably, the promotion is visually connected to the particular menu item that leads to the content item. As indicated by block **50**, one way to visually connect the promotion with the particular menu item is to display a border that encompasses the promotion and the particular menu item. Other ways to visually connect the promotion with the particular menu item include displaying a line or an arc connecting the two.

For example, consider the current menu comprising menu items M**1**, M**2**, M**3**, M**4** and M**5**, and the promotion **32** being for a content item in the menu item M**4**. In this example, the user interface generator **12** causes the user interface **40** to display the promotion **32** adjacent and to the right of the menu items M**1**, M**2**, M**3**, M**4** and M**5**. The promotion **32** is visually connected to the menu item M**4** by displaying a border **51** that encompasses the two.

As indicated by block **51**, the user interface generator **12** provides up/down commands to move a cursor position upward/downward by one menu item in the displayed menu. The up/down commands can be initiated by a user using the remote control **22** or another user input device. The remote control **22** can include an up button **54** to make the up command, and a down button **56** to make the down command.

As indicated by block **60**, the user interface generator **12** provides a right command to move the cursor position to the particular menu item (having the associated promotion) from any other one of the menu items. The remote control **22** can include a right button **62** to make the right command. Thus, in the above example, a user can press the right button **62** to move the cursor position to the menu item M**4** from a previous position at any of the menu items M**1**-M**5**.

Different transitions for moving the cursor position are depicted in FIG. **1** by arrows within the user interface **40**. In practice, the user interface **40** displayed to the user may or may not include these arrows.

As indicated by block **64**, the user interface generator **12** determines if the cursor position is at the particular menu item having the associated promotion. It is noted that any menu item at which the cursor is currently positioned may be referred to as a current menu item.

When the cursor position is at a current menu item other than the particular menu item having the associated promotion, the user interface generator **12** displays the current menu item with a cursor-position-indicating visual characteristic, and displays the particular menu item and the promotion with a non-cursor-position-indicating visual characteristic (as indicated by block **66**). The cursor and non-cursor visual characteristics may differ by their respective background colors, background patterns, background shades, border patterns, fonts, text sizes, underlining text, italicizing text, bolding text, flashing, or any combination thereof.

When the cursor position is at the particular menu item having the associated promotion, the user interface generator **12** displays both the particular menu item and the promotion with the cursor-position-indicating visual characteristic (as indicated by block **70**).

Optionally, if the cursor position has been moved to the particular menu item using the right command, the user interface generator **12** can provide a left command to move the cursor position from the particular menu item back to the other menu item (as indicated by block **72**). The remote control **22** can include a left button **74** to make the left command. Thus, in the above example, if the user has pressed the right button **62** to move the cursor position from the menu item M**2** to the menu item M**4**, the user can thereafter press the left button **74** to move the cursor position back to the menu item M**2**.

As indicated by block **76**, the user interface generator **12** can receive a command from the user. The command can

include a cursor command, such as either the up command, the down command, the right command or the left command. Alternatively, the command can include a menu item selection command. The current menu item can be selected in response to the user pressing a selection button **78** of the remote control **22**.

If a cursor command is received, the cursor position can be moved based on the cursor command (as indicated by block **80**), and flow of the method is directed back to block **64**.

If a menu item selection command is received, the user can navigate to deeper levels in the menu structure **14**. Continuing with the above example, consider the user gaining interest in the content item **38** after having seen the promotion **32**. As indicated by block **82**, the user can select the particular menu item (and optionally make one or more additional commands) to navigate to the content item **38** in the menu structure **14**. For example, the user can press the selection button **78** when the cursor position is at the menu item M**4** to begin to navigate to the content item **38**. Thereafter, as indicated by block **84**, a content player **86** of the content receiver **10** can play the content item **38**. This act may include retrieving the content item **38** from the content provider **39**. The content item **38** may be communicated from the content provider **39** to the content receiver **10** via a network such as the Internet, a digital subscriber line (DSL) network, a cable-television-plant-based computer network, a wireless data network such as a 3G network, an intranet, an extranet, or any combination thereof.

Referring back to block **24**, if no content item is to be promoted when displaying the current menu, the user interface generator **12** causes a display of the menu items in the current menu without displaying the promotion **32** (as indicated by block **90**). For example, consider a time when the content item **38** is no longer to be promoted when displaying the menu items M**1**, M**2**, M**3**, M**4** and M**5**. At this time, which may be after the user interface **40** has been displayed, the user interface **42** is generated and displayed. The user interface **42** displays the menu items M**1**, M**2**, M**3**, M**4** and M**5** without displaying the promotion **32** beside the menu items M**1**, M**2**, M**3**, M**4** and M**5**.

As indicated by block **92**, the user interface generator **12** provides up/down commands to move a cursor position upward/downward by one menu item in the displayed menu. The up/down commands can be initiated by a user using the up button **54** and the down button **56** of the remote control **22** or another user input device. However, the user interface generator **12** disables the right command that previously had enabled the user to move directly to the menu item M**4** from any of the menu items M**1**-M**5**.

Different transitions for moving the cursor position are depicted in FIG. **1** by arrows within the user interface **42**. In practice, the user interface **42** displayed to the user may or may not include these arrows.

As indicated by block **94**, the user interface generator **12** displays the current menu item with the cursor-position-indicating visual characteristic, and displays the other items with the non-cursor-position-indicating visual characteristic. Subsequent acts of moving the cursor position based on cursor commands from the user, navigating to content in the menu structure, and playing the content may be performed. Thus, other than the right and left commands, the user can interact with the menu structure **14** in the same way regardless of whether or not a promotion is displayed.

FIGS. **3** to **5** show examples of user interfaces generated by the user interface generator **12**. These user interfaces are presented for illustrative purposes.

FIG. **3** is an illustration of an embodiment of a user interface that displays, beside multiple menu items, a promotion **100** for a content item. The promotion **100** is to direct a user to a particular menu item **102** where a promoted content item is available. The promotion **100** may include an image **104**, a headline **106**, promotional text **110**, and text **112** to reinforce its relationship to the particular menu item **102**.

In this illustration, the cursor position is at a menu item **114**. Thus, the menu item **114** is displayed with a cursor-position-indicating background. Other menu items, including a menu item **116**, the particular menu item **102** and the promotion **100**, are displayed with a non-cursor-position-indicating background.

FIG. **4** is an illustration of an embodiment of the user interface of FIG. **3** when the cursor position is moved to the menu item **102** and the promotion **100**. The cursor position can be moved from the menu item **114** to the menu item **102**/promotion **100** by pressing the down button **56** five times, or by pressing the right button **62** once. The particular menu item **102** and the promotion **100** are displayed with the cursor-position-indicating background. Other menu items, including the menu item **114**, are displayed with a non-cursor-position-indicating background.

FIG. **5** is an illustration of an embodiment of the user interface when the content item is not being promoted. In this case, the user interface displays the multiple menu items but is absent the promotion **100**. In FIGS. **3** and **4**, the promotion **100** is displayed in a part of the user interface that would otherwise comprise substantively empty space as shown in FIG. **5**. The menu item **114** is displayed with the cursor-position-indicating background to indicate its having the cursor position.

Benefits of the herein-disclosed method and system include: (a) modularity, in that promotions can be added or removed from menu pages of a set-top box as a content provider or a network operator wishes; (b) familiarity, in that the user interacts with the menu structure in substantially the same way whether the promotion is present or not; (c) influence, in that the promotion directs the user to a certain menu item; and (d) relevance, in that the promotion is visually connected to the certain menu item where the content is available.

Referring to FIG. **6**, an illustrative embodiment of a general computer system is shown and is designated **600**. The computer system **600** can include a set of instructions that can be executed to cause the computer system **600** to perform any one or more of the methods or computer based functions disclosed herein. The computer system **600** may operate as a standalone device or may be connected, e.g., using a network, to other computer systems or peripheral devices.

In a networked deployment, the computer system may operate in the capacity of a server or as a client user computer in a server-client user network environment, or as a peer computer system in a peer-to-peer (or distributed) network environment. The computer system **600** can also be implemented as or incorporated into various devices, such as a personal computer (PC), a tablet PC, a set-top box (STB), a personal digital assistant (PDA), a mobile device, a palmtop computer, a laptop computer, a desktop computer, a communications device, a wireless telephone, a land-line telephone, a control system, a camera, a scanner, a facsimile machine, a printer, a pager, a personal trusted device, a web appliance, a network router, switch or bridge, or any other machine capable of executing a set of instructions (sequential or otherwise) that specify actions to be taken by that machine. In a particular embodiment, the computer system **600** can be implemented using electronic devices that provide voice,

video or data communication. Further, while a single computer system **600** is illustrated, the term "system" shall also be taken to include any collection of systems or sub-systems that individually or jointly execute a set, or multiple sets, of instructions to perform one or more computer functions.

As illustrated in FIG. **6**, the computer system **600** may include a processor **602**, e.g., a central processing unit (CPU), a graphics processing unit (GPU), or both. Moreover, the computer system **600** can include a main memory **604** and a static memory **606** that can communicate with each other via a bus **608**. As shown, the computer system **600** may further include a video display unit **610**, such as a liquid crystal display (LCD), an organic light emitting diode (OLED), a flat panel display, a solid state display, or a cathode ray tube (CRT). Additionally, the computer system **600** may include an input device **612**, such as a keyboard, and a cursor control device **614**, such as a mouse. The computer system **600** can also include a disk drive unit **616**, a signal generation device **618**, such as a speaker or remote control, and a network interface device **620**.

In a particular embodiment, as depicted in FIG. **6**, the disk drive unit **616** may include a computer-readable medium **622** in which one or more sets of instructions **624**, e.g. software, can be embedded. Further, the instructions **624** may embody one or more of the methods or logic as described herein. In a particular embodiment, the instructions **624** may reside completely, or at least partially, within the main memory **604**, the static memory **606**, and/or within the processor **602** during execution by the computer system **600**. The main memory **604** and the processor **602** also may include computer-readable media.

In an alternative embodiment, dedicated hardware implementations, such as application specific integrated circuits, programmable logic arrays and other hardware devices, can be constructed to implement one or more of the methods described herein. Applications that may include the apparatus and systems of various embodiments can broadly include a variety of electronic and computer systems. One or more embodiments described herein may implement functions using two or more specific interconnected hardware modules or devices with related control and data signals that can be communicated between and through the modules, or as portions of an application-specific integrated circuit. Accordingly, the present system encompasses software, firmware, and hardware implementations.

In accordance with various embodiments of the present disclosure, the methods described herein may be implemented by software programs executable by a computer system. Further, in an exemplary, non-limited embodiment, implementations can include distributed processing, component/object distributed processing, and parallel processing. Alternatively, virtual computer system processing can be constructed to implement one or more of the methods or functionality as described herein.

The present disclosure contemplates a computer-readable medium that includes instructions **624** or receives and executes instructions **624** responsive to a propagated signal, so that a device connected to a network **626** can communicate voice, video or data over the network **626**. Further, the instructions **624** may be transmitted or received over the network **626** via the network interface device **620**.

While the computer-readable medium is shown to be a single medium, the term "computer-readable medium" includes a single medium or multiple media, such as a centralized or distributed database, and/or associated caches and servers that store one or more sets of instructions. The term "computer-readable medium" shall also include any medium that is capable of storing, encoding or carrying a set of instructions for execution by a processor or that cause a computer system to perform any one or more of the methods or operations disclosed herein.

In a particular non-limiting, exemplary embodiment, the computer-readable medium can include a solid-state memory such as a memory card or other package that houses one or more non-volatile read-only memories. Further, the computer-readable medium can be a random access memory or other volatile re-writable memory. Additionally, the computer-readable medium can include a magneto-optical or optical medium, such as a disk or tapes or other storage device to capture carrier wave signals such as a signal communicated over a transmission medium. A digital file attachment to an e-mail or other self-contained information archive or set of archives may be considered a distribution medium that is equivalent to a tangible storage medium. Accordingly, the disclosure is considered to include any one or more of a computer-readable medium or a distribution medium and other equivalents and successor media, in which data or instructions may be stored.

Although the present specification describes components and functions that may be implemented in particular embodiments with reference to particular standards and protocols, the disclosure is not limited to such standards and protocols. For example, standards for Internet and other packet switched network transmission (e.g., TCP/IP, UDP/IP, HTML, HTTP) represent examples of the state of the art. Such standards are periodically superseded by faster or more efficient equivalents having essentially the same functions. Accordingly, replacement standards and protocols having the same or similar functions as those disclosed herein are considered equivalents thereof.

The illustrations of the embodiments described herein are intended to provide a general understanding of the structure of the various embodiments. The illustrations are not intended to serve as a complete description of all of the elements and features of apparatus and systems that utilize the structures or methods described herein. Many other embodiments may be apparent to those of skill in the art upon reviewing the disclosure. Other embodiments may be utilized and derived from the disclosure, such that structural and logical substitutions and changes may be made without departing from the scope of the disclosure. Additionally, the illustrations are merely representational and may not be drawn to scale. Certain proportions within the illustrations may be exaggerated, while other proportions may be minimized. Accordingly, the disclosure and the figures are to be regarded as illustrative rather than restrictive.

One or more embodiments of the disclosure may be referred to herein, individually and/or collectively, by the term "invention" merely for convenience and without intending to voluntarily limit the scope of this application to any particular concept. Moreover, although specific embodiments have been illustrated and described herein, it should be appreciated that any subsequent arrangement designed to achieve the same or similar purpose may be substituted for the specific embodiments shown. This disclosure is intended to cover any and all subsequent adaptations or variations of various embodiments. Combinations of the above embodiments, and other embodiments not specifically described herein, will be apparent to those of skill in the art upon reviewing the description.

The Abstract of the Disclosure is provided to comply with 37 C.F.R. §1.72(b) and is submitted with the understanding that it will not be used to interpret or limit the scope or meaning of the claims. In addition, in the foregoing Detailed

Description, various features may be grouped together or described in a single embodiment for the purpose of streamlining the disclosure. This disclosure is not to be interpreted as reflecting an intention that the claimed embodiments require more features than are expressly recited in each claim. Rather, as the following claims reflect, inventive subject matter may be directed to less than all of the features of any of the disclosed embodiments. Thus, the following claims are incorporated into the Detailed Description, with each claim standing on its own as defining separately claimed subject matter.

The above disclosed subject matter is to be considered illustrative, and not restrictive, and the appended claims are intended to cover all such modifications, enhancements, and other embodiments which fall within the true scope of the present disclosure. Thus, to the maximum extent allowed by law, the scope of the present disclosure is to be determined by the broadest permissible interpretation of the following claims and their equivalents, and shall not be restricted or limited by the foregoing detailed description.

What is claimed is:

1. A system comprising:

a processor; and

a memory coupled to the processor, the memory including instructions that, when executed by the processor, cause the processor to perform operations comprising:

displaying a plurality of menu items in a graphical user interface, wherein each of the plurality of menu items is associated with one of a plurality of media content items;

when a particular promotion associated with a particular media content item is to be displayed:

displaying the particular promotion adjacent to a particular menu item of the plurality of menu items; and

enabling a direction command, wherein selection of the direction command causes a cursor position to jump directly to the particular menu item from a different menu item of the plurality of menu items; and

when the particular promotion is not to be displayed, disabling the direction command.

2. The system of claim **1**, wherein the particular media content item of the plurality of media content items is a video-on-demand item or a broadcast video item.

3. The system of claim **1**, wherein the particular media content item of the plurality of media content items is an audio item.

4. The system of claim **1**, wherein the particular media content item of the plurality of media content items is received from an external content source.

5. The system of claim **4**, wherein the operations further comprise receiving the particular promotion from the external content source.

6. The system of claim **1**, wherein the particular promotion includes an image, text, or both identifying a relationship of the particular media content item to the particular menu item.

7. The system of claim **1**, wherein the particular promotion indicates a time period when the particular promotion is valid.

8. The system of claim **1**, wherein the operations further comprise displaying a cursor-position-indicating border that encompasses the particular promotion and that encompasses the particular menu item, the cursor-position-indicating border visually connecting the particular promotion to the particular menu item.

9. The system of claim **1**, wherein, when the cursor jumps to the particular menu item directly from the different menu item, the different menu item is modified in the display to have a non-cursor-position-indicating visual characteristic that is distinct from another menu item.

10. The system of claim **1**, wherein the operations further comprise displaying a link between the particular promotion and the particular menu item to visually connect the particular promotion to the particular menu item in response to receiving an input indicating a selection of the direction command.

11. The system of claim **1**, wherein the operations further comprise:

enabling a different direction command in response to receiving an input indicating a selection of the direction command;

wherein, in response to receiving a second input indicating a different selection of the different direction command, the menu is modified to display the different menu item with a cursor-position-indicating visual characteristic; and

wherein, in response to receiving the second input indicating the different selection of the different direction command, the menu is modified to display the particular menu item and the particular promotion with a non-cursor-position-indicating visual characteristic to visually disconnect the particular promotion from the particular menu item.

12. The system of claim **11**, wherein the input indicating the selection of the direction command is received from an input device.

13. The system of claim **1**, wherein the direction command is a right command.

14. A method comprising:

displaying, at a computing device, a plurality of menu items in a menu of a graphical user interface, wherein each of the plurality of menu items is associated with one of a plurality of media content items;

when a particular promotion associated with a particular media content item is to be displayed:

displaying the particular promotion proximate to a particular menu item of the plurality of menu items; and

enabling a direction command, wherein selection of the direction command causes a cursor position to jump directly to the particular menu item from a different menu item of the plurality of menu items; and

when the particular promotion is not to be displayed, disabling the direction command.

15. The method of claim **14**, wherein the particular promotion is to be displayed when a time period associated with the particular promotion has not expired, and wherein the particular promotion is not to be displayed after the time period associated with the particular promotion has expired.

16. The method of claim **14**, further comprising receiving the particular promotion from a content source associated with the plurality of media content items.

17. The method of claim **14**, further comprising moving the cursor from the different menu item directly to the particular menu item in response to receiving an input indicating the selection of the direction command.

18. The method of claim **14**, further comprising:

enabling a different direction command in response to receiving an input indicating a selection of the direction command;

wherein, in response to receiving a second input indicating a different selection of the different direction command, displaying the different menu item with a cursor-position-indicating visual characteristic; and

wherein, in response to receiving the second input indicating the different selection of the different direction command, displaying the particular menu item and the par-

ticular promotion with a non-cursor-position-indicating visual characteristic to visually disconnect the particular promotion from the particular menu item.

19. The method of claim **18**, wherein the direction command is a right command and the different direction command is a left command.

20. A computer readable storage device comprising instructions that, when executed by a processor, cause the processor to perform operations comprising:

displaying, at a computing device, a plurality of menu items in a graphical user interface, wherein each of the plurality of menu items is associated with one of a plurality of media content items;

when a particular promotion associated with a particular media content item is to be displayed:

displaying the particular promotion proximate to a particular menu item of the plurality of menu items; and

enabling a direction command, wherein selection of the direction command causes a cursor position to jump to the particular menu item from a different menu item of the plurality of menu items; and

when the particular promotion is not to be displayed, disabling the direction command.

* * * * *